SONY®

HD VIDEOCASSETTE RECORDER

HDV-10

HDVS UNIHI

MAINTENANCE MANUAL

Volume 1 1st Edition (Revised 4)

Serial No. 10001 and Higher

SAFETY CHECK-OUT

(Only for USA)

After correcting the original service problem, perform the following safety checks before releasing the set to the customer:

Check the metal trim, "metallized" knobs, screws, and all other exposed metal parts for AC leakage. Check leakage as described below.

LEAKAGE TEST

The AC leakage from any exposed metal part to earth ground and from all exposed metal parts to any exposed metal part having a return to chassis, must not exceed 3.5 mA. Leakage current can be measured by any one of three methods.

1. A commercial leakage tester, such as the Simpson 229 or RCA WT-540A. Follow the manufacturers' instructions to use these instruments.
2. A battery-operated AC milliammeter. The Data Precision 245 digital multimeter is suitable for this job.
3. Measuring the voltage drop across a resistor by means of a VOM or battery-operated AC voltmeter. The "limit" indication is 5.25V, so analog meters must have an accurate low-voltage scale. The Simpson 250 and Sanwa SH-63Trd are examples of a passive VOM that is suitable. Nearly all battery operated digital multimeters that have a 20V AC range are suitable. (See Fig. A)

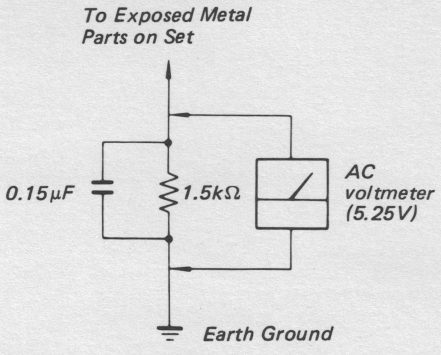

Fig. A. Using an AC voltmeter to check AC leakage.

このマニュアルに記載されている事柄の著作権は当社にあり，説明内容は機器購入者の使用を目的としています。
従って，当社の許可なしに無断で複写したり，説明内容(操作，保守等）と異なる目的で本マニュアルを使用することを禁止します。

The material contained in this manual consists of information that is the property of Sony Corporation and is intended solely for use by the purchasers of the equipment described in this manual.
Sony Corporation expressly prohibits the duplication of any portion of this manual or the use thereof for any purpose other than the operation or maintenance of the equipment described in this manual without the express written permission of Sony Corporation.

Le matériel contenu dans ce manuel consiste en informations qui sont la propriété de Sony Corporation et sont destinées exclusivement à l'usage des acquéreurs de l'équipement décrit dans ce manuel.
Sony Corporation interdit formellement la copie de quelque partie que ce soit de ce manuel ou son emploi pour tout autre but que des opérations ou entretiens de l'équipement à moins d'une permission écrite de Sony Corporation.

Das in dieser Anleitung enthaltene Material besteht aus Informationen, die Eigentum der Sony Corporation sind, und ausschließlich zum Gebrauch durch den Käufer der in dieser Anleitung beschriebenen Ausrüstung bestimmt sind.
Die Sony Corporation untersagt ausdrücklich die Vervielfältigung jeglicher Teile dieser Anleitung oder den Gebrauch derselben für irgendeinen anderen Zweck als die Bedienung oder Wartung der in dieser Anleitung beschriebenen Ausrüstung ohne ausdrückliche schriftliche Erlaubnis der Sony Corporation.

目 次
TABLE OF CONTENTS

Volume-1

1. INSTALLATION

1-1. Unpacking and Repacking 1-1
1-2. Accessories 1-2
1-2-1. Supplied Accessories 1-2
1-2-2. Optional Accessory 1-3
1-3. Power Requirements 1-3
1-3-1. Capacity of AC Power Sorce 1-3
1-3-2. Power Cable Cording 1-3
1-3-3. Notes on Voltage Selector 1-3
1-3-4. Ventilation and Heat Sink 1-4
1-4. Installation Conditions 1-4
1-5. Installation Space 1-5
1-6. Rack-mounting 1-7
1-7. Input/Output Interface 1-9
1-7-1. Matching Connectors and Cables 1-9
1-7-2. Signal Inputs and Outputs 1-10
1-8. Switch/Jumper/Menu Settings 1-13
1-8-1. Initial Setting Menu 1-13
1-8-2. Switch/Jumper/Indicator/ Volume Settings 1-13

2. SERVICE INFORMATION

2-1. Specifications 2-1
2-2. Printed Circuit Board Function 2-4
2-3. Location of Main Parts 2-6
2-3-1. Location of Card Rack ① to ③ 2-6
2-3-2. Location of Front Panel/Function Control Panel/Switch Panel 2-7
2-3-3. Location of Rear Panel 2-8
2-3-4. Location of Power Block 2-8
2-3-5. Location of Fan Motor 2-9
2-3-6. Location of Cassette Compartment 2-9
2-3-7. Location of Tape Transport-1 2-10
2-3-8. Location of Tape Transport-2 2-11
2-4. Explanation of Sensor Functions 2-12
2-5. Removal of Cabinet 2-13
2-5-1. Removal of Top Panel, Side Panels, Front Panel, Function Control Panel, Rear Panel and Bottom Panel 2-13
2-5-2. Opening and Closing of Function Control Panel and Remote Control Operation 2-14
2-6. Removal of Function Control Panel Components 2-15
2-7. Cassette Compartment Ass'y 2-16
2-7-1. Removal of Cassette Compartment 2-16
2-7-2. Manual Operation of Cassette Compartment 2-17
2-8. Mechanical Deck (TTP Ass'y) Opening or Closing 2-18
2-8-1. Basic Knowledge of Opening or Closing 2-18
2-8-2. Opening or Closing 2-18
2-9. Notes on Power Unit 2-20
2-9-1. Primary Circuit and Electric Shock 2-20
2-9-2. Notes on Voltage Selector 2-20
2-9-3. Removal of Power Supply 2-21
2-9-4. Removal of PS-187/PC-56/ PC-57/AC-100 Boards 2-22
2-10. Replacement Procedure of Printed Circuit Boards 2-24
2-10-1. Removing/Inserting Plug-in Boards 2-24
2-10-2. Replacement Procedure of Boards of Connector Panel 2-24
2-11. Extension Board 2-24
2-12. Notes on Repair Parts 2-25
2-12-1. Notes on Repair Parts 2-25
2-12-2. Replacement Procedure of Chip Parts 2-25
2-12-3. Removal of PLCC IC 2-26
2-12-4. Replacement Procedure of Backup Battery 2-27
2-12-5. Replacement Procedure of Fuse 2-28
2-13. How to Remove a Cassette When the Tape is Slack 2-29
2-14. Measures Against Head Clogging 2-30
2-15. Precautions in Replacement of IF-241 and RM-68 Boards 2-31
2-16. Cautions after Replacement of NOVRAM on RM-68 Board 2-31
2-17. Adjustment and Check after Replacement of Boards 2-32

3. SELF DIAGNOSTIC FUNCTION

3-1. Error Messages 3-1
3-2. Test Mode Menu 3-5
3-3. Maintenance Menu 3-9
3-3-1. TTP ADJ Menu 3-9
3-3-2. PANEL Menu 3-12
3-3-3. VERSION Menu 3-15
3-3-4. EXTEND Menu 3-16
3-4. NOVRAM Data 3-19
3-5. Saving and Recalling Set-up Data 3-20
3-6. Loading Servo Parameter Data from Backup Area 3-23

4. FIXTURES AND MEASURING INSTRUMENTS

4-1. Fixtures 4-1
4-2. Measuring Instruments 4-8
4-3. Alignment Tape GR2-1, GR5-1 4-9

5. INSPECTION AND MAINTENANCE

5-1. Periodic Inspection Items 5-1

6. PERIODIC CHECK AND MAINTENANCE

6-1. Cleaning 6-1
6-1-1. Basic Knowledge before Cleaning ... 6-1
6-1-2. Rotary Head and Upper Drun Tape Transport Surface 6-3
6-1-3. Drum Lead Surface and Lower Drum Tape Transport Surface 6-4
6-1-4. Tape Guide 6-5
6-1-5. Stationary Head 6-6
6-1-6. Cassette Compartment 6-7
6-1-7. Reel Table and Positioning Pins 6-8
6-1-8. Fan Motor 6-9
6-2. How To Use the Cleaning Cassette 6-10
6-3. Tracking Check 6-12
6-4. Head Projection Check 6-13

7. MAIN PART REPLACEMENT

7-1. General Information for Part Replacement 7-1
7-1-1. Preparation before Part Replacement 7-1
7-1-2. How to Use Tool 7-1
7-1-3. How to Put the Unit into Threading End/Unthreading End State 7-2
7-2. Upper Drum Ass'y Replacement 7-3
7-3. Drum Ass'y Replacement 7-9
7-4. Brush Slip Ring Ass'y Replacement 7-13
7-4-1. Brush Ass'y Replacement 7-13
7-4-2. Slip Ring Ass'y Replacement 7-15
7-5. Cleaning Roller Ass'y Replacement 7-18
7-6. Pinch Roller Ass'y Replacement 7-19
7-7. Cassette Compartment Ass'y Replacement 7-22
7-8. Replacement of Cassette Compartment Component Part 7-23
7-8-1. Cassette Compartment Motor Replacement 7-24
7-8-2. Cassette Compartment Worm Ass'y Replacement 7-26
7-8-3. Cassette Compartment Lid/Lid Opening Gear Replacement 7-28
7-8-4. Cassette Compartment Driving Gear(L)/ Driving Arm Replacement 7-30
7-8-5. Cassette Compartment Driving Gear(R)/ Driving Arm Replacement 7-33
7-9. Reel Table Block Replacement 7-36
7-9-1. Reel Table Ass'y Replacement 7-37
7-9-2. Brake Ass'y Replacement 7-40
7-9-3. Reel Brake Solenoid Replacement ... 7-44
7-9-4. Reel Motor Ass'y Replacement 7-46
7-10. Tension Regulator Block Replacement 7-52
7-10-1. Tension Regulator Guide Ass'y Replacement 7-54
7-10-2. Replacement of Tension Regulator Sub-arm Ass'y 7-57
7-10-3. Tension Regulator Arm Ass'y Replacement 7-59
7-10-4. Tension Regulator Sensor Block Replacement 7-65
7-11. S Drawer Arm Block Replacement 7-70
7-11-1. Tape Guide 0 Ass'y Replacement 7-71
7-11-2. Tape Guide 0 Arm Ass'y Replacement 7-73
7-11-3. Replacement of Tape Guide 0 Bearing Holder Ass'y 7-75
7-12. Tape Guide 1 Block Replacement 7-76
7-12-1. Tape Guide 1 Ass'y Replacement 7-77
7-12-2. Replacement of Tape Guide 1 Support Shaft 7-79
7-13. Tape Guide 2 Block Replacement 7-83
7-13-1. Tape Guide 2 Ass'y Replacement 7-83
7-13-2. Tape Guide 2 Shaft Replacement 7-83
7-14. Tape Guide 3 Block Replacement 7-84
7-14-1. Tape Guide 3 Ass'y Replacement 7-84
7-14-2. Tape Guide 3 Shaft Replacement 7-84
7-15. Tape Guide 4 Block Replacement 7-85
7-15-1. Tape Guide 4 Ass'y Replacement 7-85
7-15-2. Tape Guide 4 Shaft Replacement 7-85
7-16. Slant Guide (T Drawer Guide) Ass'y Replacement 7-86
7-16-1. Slant Guide Sub-arm Ass'y Replacement 7-87
7-16-2. Slant Guide Arm Ass'y Replacement 7-89
7-16-3. Slant Guide Bearing Ass'y Replacement 7-91
7-17. Tape Guide 5 Block Replacement 7-92
7-17-1. Tape Guide 5 Ass'y Replacement 7-93
7-17-2. Tape Guide 5 Base Ass'y Replacement 7-94
7-17-3. Pinch Roller Guide Replacement 7-96
7-18. Loading Ring Block Replacement 7-97
7-18-1. Ring Guide 1/2/3/4 Ass'y Replacement 7-98
7-18-2. Loading Ring Ass'y Replacement 7-99

7-19. Loading Drive Gear Block Replacement 7-106
7-19-1. Loading Drive Gear Ass'y Replacement 7-107
7-19-2. Potentiometor Gear Ass'y Replacement 7-111
7-19-3. Loading Motor Replacement 7-113
7-20. Pinch Roller Press Ass'y Replacement 7-117
7-21. Capstan Motor Replacement 7-119
7-22. Stationary Head Ass'y Replacement ... 7-123
7-23. Full Erase Head Replacement 7-126
7-24. Stationary Head Cleaner Ass'y Replacement 7-129
7-24-1. Head Cleaner Replacement 7-129

8. TAPE TRANSPORT ALIGNMENT

8-1. Adjustment Flowchart 8-1
8-2. Tape Tension Check and Adjustment 8-2
8-2-1. Tape Tension Check (FWD) 8-2
8-2-2. Tape Tension Adjustment (REV) 8-2
8-2-3. Tape Tension Adjustment (FWD) 8-3
8-2-4. Tape Tension Adjustment (REV) 8-4
8-3. Tape Transport Check and Adjustment 8-5
8-3-1. Tape Transport Check 8-6
8-3-2. Tape Transport Adjustment 8-7
8-4. Tape Speed Check and Adjustment 8-10
8-4-1. Tape Speed Check 8-10
8-4-2. Tape Speed Adjustment 8-11
8-5. Tracking Check and Adjustment 8-13
8-5-1. Tracking Check 8-13
8-5-2. Tracking Adjustment 8-15
8-6. Stationary Head Height and Zenith Checks, and Adjustment 8-23
8-6-1. Stationary Head Height and Zenith Checks 8-23
8-6-2. Stationary Head Height and Zenith Adjustments 8-25
8-7. PB CTL Phase Check and Adjustment 8-26
8-7-1. PB CTL Phase Check (1) 8-26
8-7-2. PB CTL Head Position Adjustment 8-28
8-7-3. PB CTL Phase Check (2) 8-29
8-7-4. PB CTL Phase Adjustment 8-30
8-8. PG Phase Check and Adjustment 8-32
8-8-1. PB Phase Check 8-32
8-8-2. PG Phase Adjustment 8-34
8-9. PB SW Phase Check and Adjustment 8-35
8-9-2. PB SW Phase Adjustment 8-36
8-10. Self-Record/Playback Waveform Check 8-37

9. GENERAL INFORMATION FOR ELECTRICAL ALIGNMENT

9-1. Adjustment Components Index 9-1
9-2. Equipment Reguired 9-2
9-2-1. Tools 9-2
9-2-2. Measuring Instruments 9-2
9-3. Test Signals 9-3
9-4. Switches/Jumpers Initialization Setting 9-4
9-5. Way of Inscribing Electric Adjustment Parts Notation 9-5

10. POWER SUPPLY ALIGNMENT

10-1. Configuration of The Power Supply Block 10-1
10-2. Troubleshooting 10-2
10-3. Adjustment Preparations 10-3
10-3-1. Removal of Power Supply Block 10-3
10-3-2. Connection 10-4
10-3-3. Location of Adjustments 10-4
10-4. Adjustment Sequence 10-6
10-5. Power Off Sens Level Adjustment (PS-187 board) 10-6
10-6. Digital +5V/Analog +5V Adjustment (PC-56 board) 10-7
10-7. −5V/+12V/−12V Adjustment (PC-57 board) 10-7

11. FUNCTION CONTROL PANEL ALIGNMENT

11-1. Adjustment Sequence 11-1
11-2. Adjustment Preparations 11-1
11-2-1. Connection 11-1
11-2-2. Locations of Adjustments and Test Points 11-1
11-2-3. Before Starting Adjustment 11-1
11-3. +5V Adjustment 11-2
11-4. Dial Pulse Amplifier Adjustment 11-2

12. SERVO SYSTEM ALIGNMENT

12-1. Adjustment Sequence 12-1
12-2. Adjustment Preparation 12-1
12-2-1. Version Confirmation 12-1
12-2-2. Connection 12-1
12-2-3. Locations 12-2
12-2-4. Servo-Test Mode 12-2
12-3. Drum Motor Test 12-4
12-4. Capstan Motor Test 12-4
12-5. S-Reel Motor Test 12-4
12-6. T-Reel Motor Test 12-5
12-7. Plunger Test 12-5
12-8. Loading Test 12-5
12-9. Cassette ID Sensor Operation Confirmation 12-6

12-10. Drum FG Level Check 12-7
12-11. Drum PG Level Check 12-8
12-12. Drum FG Error Correction Adjustment 12-9
12-13. RF Level Meter Adjustment 12-9
12-14. Top/End Sensor Operation Check 12-11

13. CUE, TC, CTL, SIGNAL SYSTEM ALIGNMENT

13-1. Adjustment Sequence 13-1
13-2. Adjustment Preparation 13-1
13-2-1. Connections 13-1
13-2-2. Locations of Adjustments and Test Points 13-2
13-2-3. Initial Setting of Switches and Jumperes 13-2
13-3. Erase System Adjustment 13-3
13-3-1. Full and CTL Erase Adjustment 13-3
13-3-2. TC Erase Adjustment 13-5
13-3-3. CUE Erase Adjustment 13-6
13-4. Playback System Adjustment 13-7
13-4-1. CTL Adjustment 13-7
13-4-2. TC Adjustment 13-7
13-4-3. CUE Adjustment 13-8
13-5. Recording System Adjustment 13-9
13-5-1. Bias Adjustment 13-9
13-5-2. Bias Fine Adjustment 13-10
13-5-3. Recording Level Adjustment 13-11
13-6. Crosstalk Canceler Adjustment 13-14

14. RF SIGNAL SYSTEM ALIGNMENT

14-1. Adjustment Arrangement 14-1
14-2. Preparation Before Adjustment 14-2
14-2-1. Machine connection (Video system) 14-2
14-2-2. Location of Boards 14-3
14-3. Playback Equalizer Adjustment (DM-77A/B) 14-4
14-3-1. A-CH (B-CH) Playback RF Envelope Level Adjustment 14-4
14-3-2. A-CH (B-CH) Playback RF Level Adjustment 14-5
14-3-3. A-CH (B-CH) Video Equalizer Adjustment (1) 14-6
14-3-4. A-CH (B-CH) Video Equalizer Adjustment (2) 14-7
14-3-5. A-CH (B-CH) Audio Equalizer Adjustment 14-8
14-4. Erase Frequency Adjustment (RE-70) 14-10
14-5. Erasure Adjustment (RE-70) 14-12
14-6. Recording Current Adjustment (MD-65/RE-70) 14-15
14-7. Self Recording/Playback Frequency Response Confirmation 14-16
14-8. A-CH (B-CH) Non-Linear-1 Mix Adjustment (DM-77A/B) 14-18
14-9. A-CH (B-CH) Video Erase Trap Adjustment (DM-77A/B) 14-19
14-10. A-CH (B-CH) Audio Erase Trap Adjustment (DM-77A/B) 14-21

15. VIDEO SIGNAL SYSTEM ALIGNMENT

15-1. Video Signal System Adjustment Basic Knowledge 15-1
15-1-1. Video System Board Adjustment 15-1
15-1-2. Adjustment Method 15-2
15-1-3. Failure Diagnosis 15-2
15-2. Adjustment Sequence 15-3
15-3. Adjustment Preparation 15-5
15-3-1. Connection 15-5
15-3-2. Locations of Adjustments and Test Points 15-6
15-4. INT Oscillation Frequency Adjustment 15-8
15-5. 38.08M PLL Adjustment 15-9
15-6. 22M PLL Adjustment 15-9
15-7. 16M PLL Adjustment 15-10
15-8. Y DL PLL Adjustment 15-10
15-9. Video Input Level Adjustment (AGC OFF) 15-11
15-10. Video Input Level Adjustment (AGC ON) 15-12
15-11. AD Video Level Adjustment (when inputting Y, P_B, P_R) 15-13
15-12. Input Matrix Adjustment 15-14
15-13. AD Video Level Adjustment (when inputting GBR) 15-15
15-14. Y Waveform Distortion Adjustment 15-16
15-15. P_B/P_R Waveform Distortion Adjustment 15-17
15-15-1. P_B/P_R Waveform Distortion Adjustment (1) 15-17
15-15-2. P_B/P_R Waveform Distortion Adjustment (2) 15-18
15-16. DLC Level Confirmation 15-19
15-17. DLC Level Adjustment 15-20
15-18. AD Video Offset Adjustment 15-22
15-19. AD Video Y Level Adjustment 15-23
15-20. AD Video P_B/P_R Level Adjustment 15-24
15-21. DA Video Level Adjustment 15-25
15-22. A-CH Non-Linear Video Level Adjustment 15-26
15-23. B-CH Non-Linear Video Level Adjustment 15-26

15-24. Non-Linear Emphasis Adjustment 15-27
15-25. A-CH DEM EE Adjustment 15-28
15-26. B-CH DEM EE Adjustment 15-29
15-27. WFM Output Offset Adjustment 15-30
15-28. SYNC AGC Adjustment 15-31
15-29. DA Y Level/Offset Adjustment 15-32
15-30. DA P_B Level/Offset Adjustment 15-33
15-31. DA P_R Level/Offset Adjustment 15-34
15-32. SMB Output Offset Adjustment 15-35
15-33. SMB Output Level Y/G Adjustment 15-36
15-34. Output Matrix Adjustment 15-37
15-35. SMB Output Level P_B/B Adjustment 15-38
15-36. SMB Output Level P_R/R Adjustment 15-39
15-37. Video Output Adjustment 15-40
15-38. Video Output P_B/B Adjustment 15-41
15-39. Video Output P_R/R Adjustment 15-42
15-40. SYNC Output Adjustment 15-43
15-41. Y/C Delay PLL Adjustment 15-44
15-42. WFM Output Level Adjustment 15-45
15-43. WFM Output Offset Adjustment 15-46
15-44. Sampling Phase Adjustment 15-47
15-45. Velocity Error Level Adjustment 15-49
15-46. Velocity Error Offset Adjustment 15-50
15-47. Velocity Error Correction Adjustment 15-51
15-47-1. Velocity Error Correction Adjustment Preparation 15-51
15-47-2. Velocity Error Correction Adjustment 15-52
15-48. SYNC Phase Preset Adjustment 15-54
15-49. Video Phase Adjustment 15-56
15-50. Analog Blanking Adjustment 15-58
15-51. Y/C Phase Adjustment 15-59
15-52. P_B/P_R Phase Adjustment 15-60
15-53. Y Phase Adjustment 15-61
15-54. Y/C Delay Adjustment 15-62
15-54-1. Y/C Delay Adjustment (1) 15-62
15-54-2. Y/C Delay Adjustment (2) 15-63
15-54-3. Y/C Delay Adjustment (3) 15-64

16. AUDIO SIGNAL SYSTEM ALIGNMENT

16-1. Adjustment Sequence 16-1
16-2. Adjustment Preparations 16-1
16-2-1. Connection 16-1
16-2-2. Locations of Adjustments and Test Points 16-2
16-2-3. Before Starting Adjustment 16-3
16-2-4. ADA-14 Board Input Impe dance Setting 16-3
16-3. D/A Converter System Adjustment (ADA-14 board) 16-3
16-4. A/D Converter System Adjustment (ADA-14 board) 16-4
16-5. PLL Adjustment (DEC-50 board) 16-5
16-6. ECC CHECK (DEC-50 board) 16-6

17. THEORY OF OPERATION

(Section 17 will be available as a supplement.)

Volume-2

18. BLOCK DIAGRAM

19. SCHEMATIC DIAGRAM

Volume-3

20. BOARD LAYOUT

21. SEMICONDUCTOR PIN ASSIGNMENT

22. REPLACEABLE PART

23. CHANGED PART

SECTION 1
INSTALLATION

1-1. UNPACKING AND REPACKING

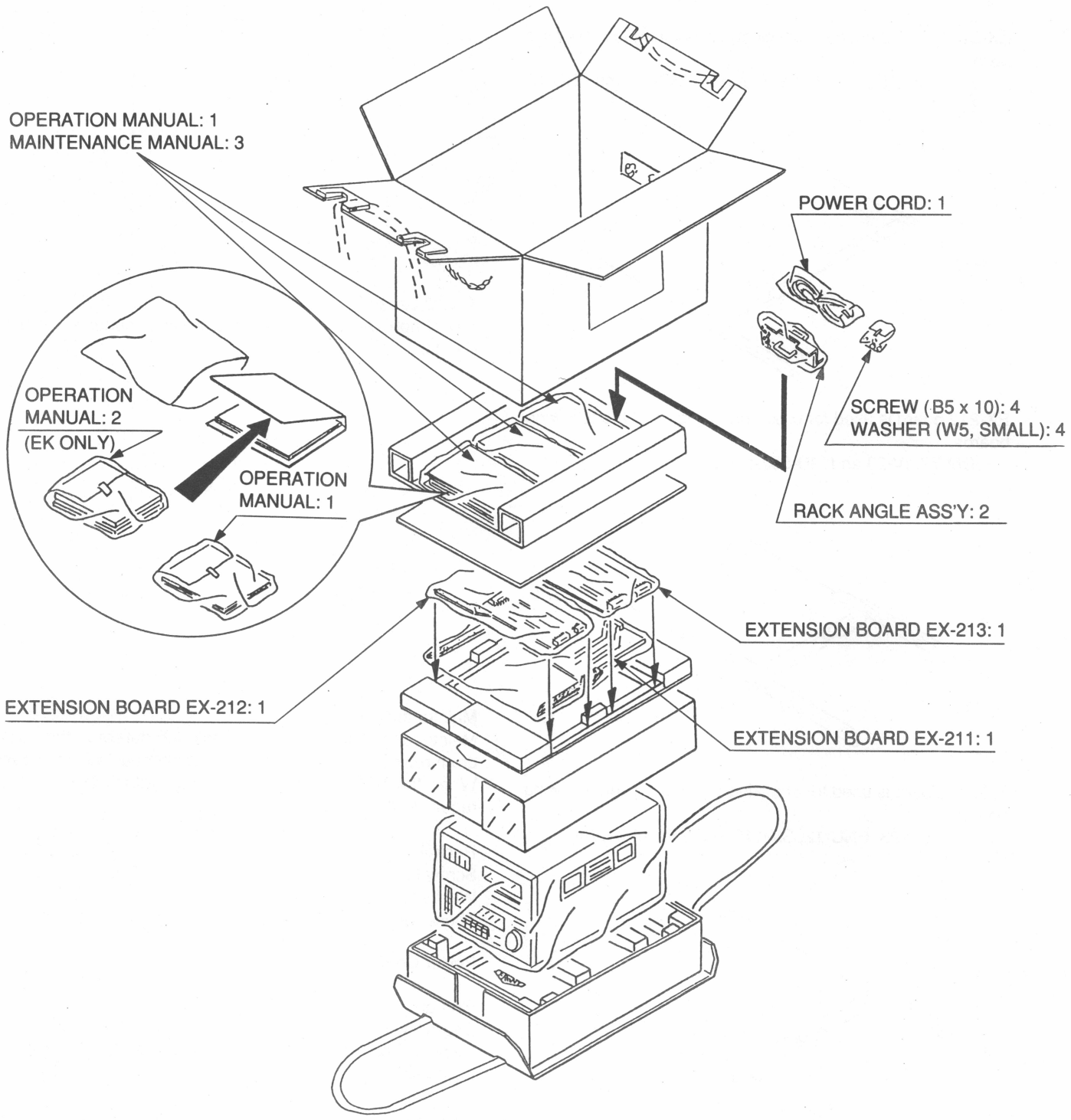

1-2. ACCESSORIES

1-2-1. Supplied Accessories

Extension Board: EX-211: 1
EX-212: 1
EX-213: 1

EX-211 board is used for checking or repairing the following boards.
ADA-14, DEC-50, IPR-1, SG-169, TBC-14 and TBC-15 boards

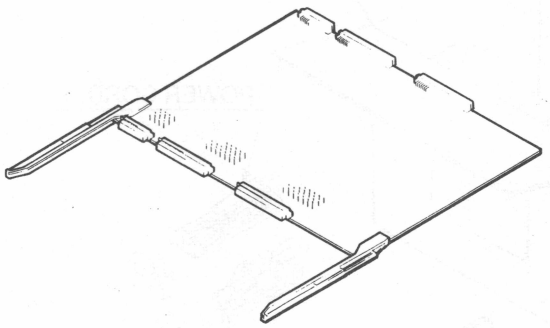

EX-212 board is used for checking or repairing the following boards.
DM-77, IV-23 and MD-55 boards

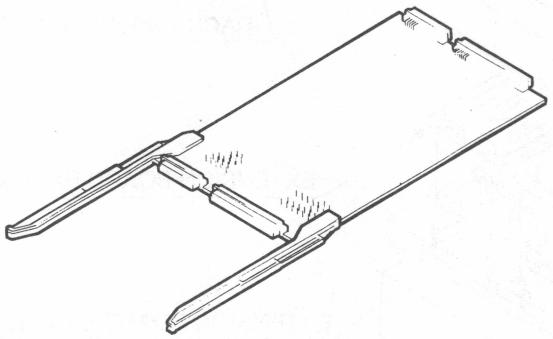

EX-213 board is used for checking or repairing the following boards.
AE-08, ED-23, ENC-12, SV-116 and SY-144 boards

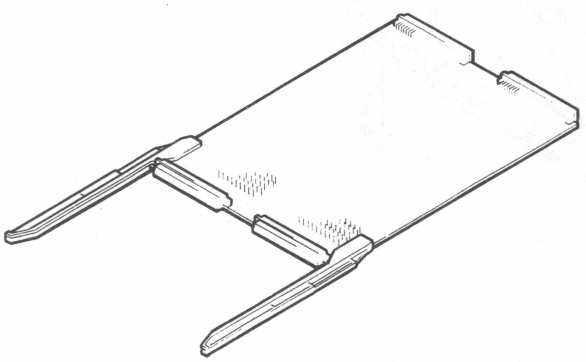

Overlay Sheet: 2
Overlay sheets are used when the user changes the assignment of the preset menu. Use the overlay sheets by placing them over the 21 keys on the control panel.

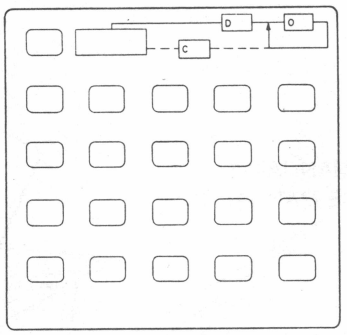

Key ID Label: 2
Key ID labels are the ID lavels for the menu bounded to overlay sheets.

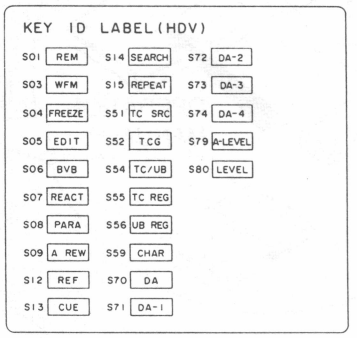

Maintenance Sheet: 1
Maintenance sheet is used for entering details of the upper drum replacements and maintenance conducted in the past. When the VTR is mounted in a rack, attach the sheet as required where it can easily be seen.

Rack Angle Ass'y: 2
Screw (B5 × 10): 4
Washer (W5, SMALL): 4
These parts are used for mounting HDV-10 in the rack.

Power Cord: 1

Operation Manual: 1
English version is provided with the USA/Canadian model. English, German and French versions are provided with the Europian model.

Maintenance Manual: 1
VOL-1 to VOL-3 are provided with the unit.

1-2-2. Optional Accessory

Digital Audio Cable ECD-3C/10C/30C
9-pin Remote Control Cable RCC-5G/10G/30G
Remote Control Unit RM-770

1-3. POWER REQUIREMENTS

1-3-1. Capacity of AC Power Sorce

Power Line Voltage (switchable)
AC 100 to 120V ± 10% (for UC)
AC 200 to 240V ± 10% (for EK)
Power Line Frequency 50/60Hz
Power Consumption 450W max. (650VA)

The supply voltage setting can be changed using the voltage selector switch in the unit. The above power is consumed during normal operation. When the unit is first switched on, however, a maximum 10A/100V input current and a maximum surge current of about 1.5 to 2 times as much the above power will flow. Unless the AC supply has sufficient capacity to handle this current the breaker on the AC supply side will operate, and also the input voltage detector inside HDV-10 will operate, causing the VTR to go into the STOP mode.

1-3-2. Power Cable Cording

Length: Approx. 2.4m

Plug configuration:

For J

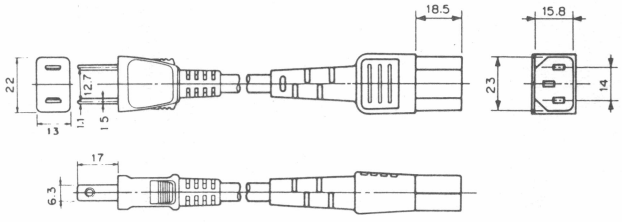

For UC

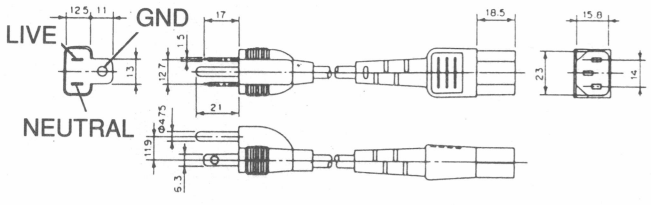

For EK

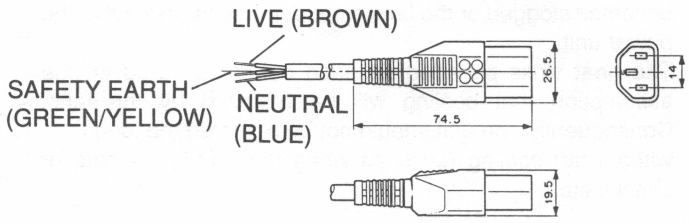

1-3-3. Notes on Voltage Selector

The voltage selector is factory set to the destination local power supply voltage.
Repair parts supplied from Sony Parts Center are set to 200-240V for safety. When replacing the power unit, check the voltage is set to 100-120V or 200-240V according to the local power supply. Be sure to set the voltage selector to the local power supply before the power switch is turned ON.
The voltage is changed by the position of the voltage selector cover as shown in the figure.

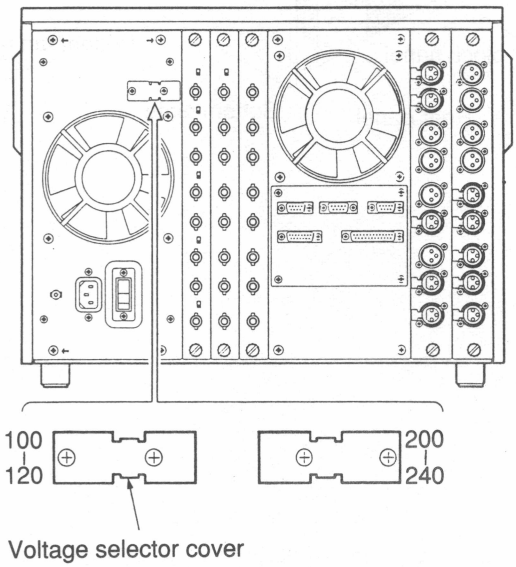

1-3-4. Ventilation and Heat Sink

Three cooling fans are fitted. If either the intake or exhaust becomes clogged or the fans stop, damage may result to the power unit.
The heat sinks provided on each board are rated on the assumption that cooling will be provided by the fans. Consequently, the unit should not be operated too long without fan cooling (such as when the unit is opened for checks etc.).

NOTE: Do not install HDV-10 removing four feet not so as to clog the bottom fan.

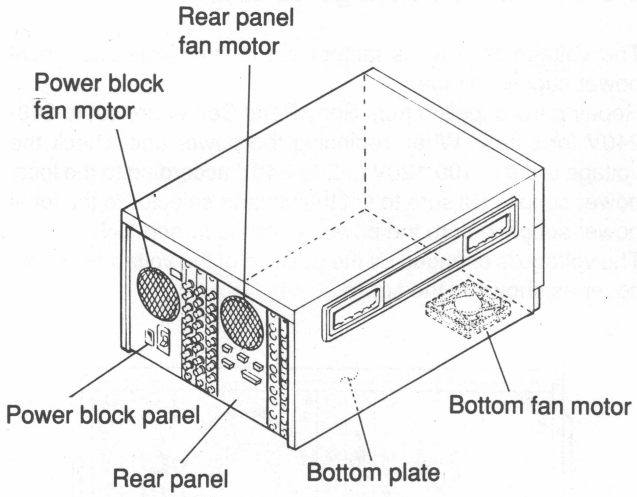

1-4. INSTALLATION CONDITIONS

Operating temparature: 10 to 35°C

Storage temperature: –40 to +55°C

Humidity: 25 to 80% (no condensation)

Notes for installation

1. Install the unit on a flat and stable base.

2. Make sure that the exhaust fan does not become blocked in order to prevent internal overheating.

3. Do not install the unit in the following locations:
   - Near the blower on the air conditioner
   - Exposed to be directly open air (for example, near the door or the window, etc.)
   - Exposed to direct sunlight or strong lights
   - In a dusty location
   - Exposed to excessive vibrations
   - Exposed to strong electromagnetic fields
   - Exposed to high levels of electrical noise
   - Exposed to static electricity

1-5. INSTALLATION SPACE

External Dimentions 424 × 331 × 621mm

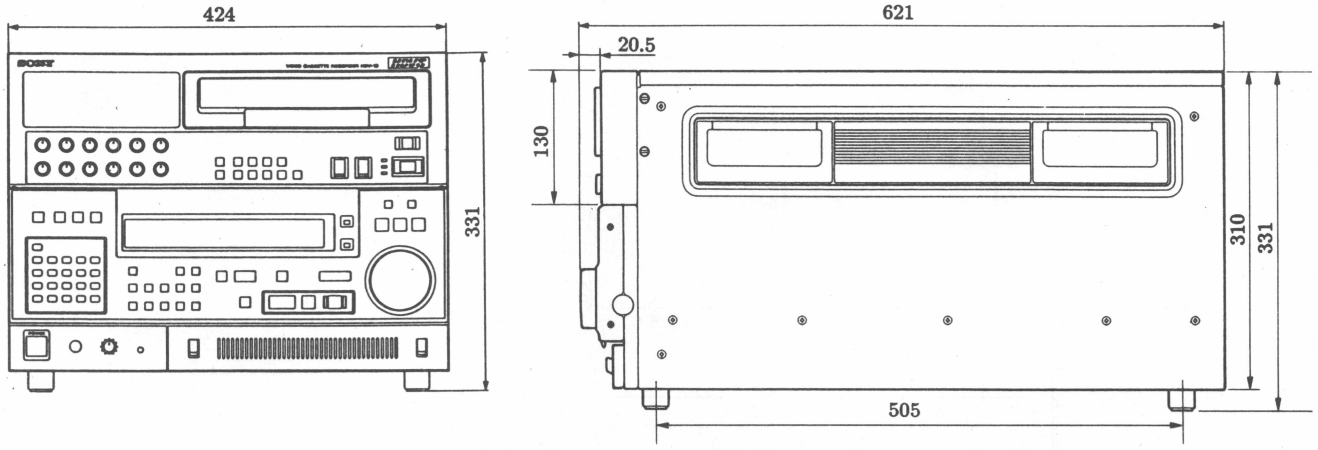

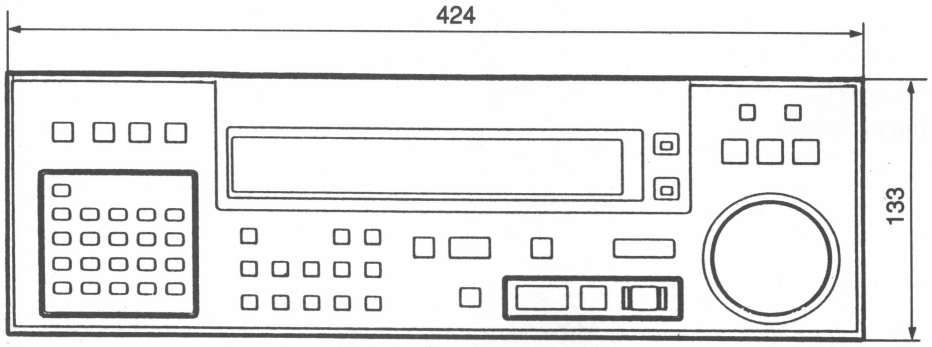

Working Space

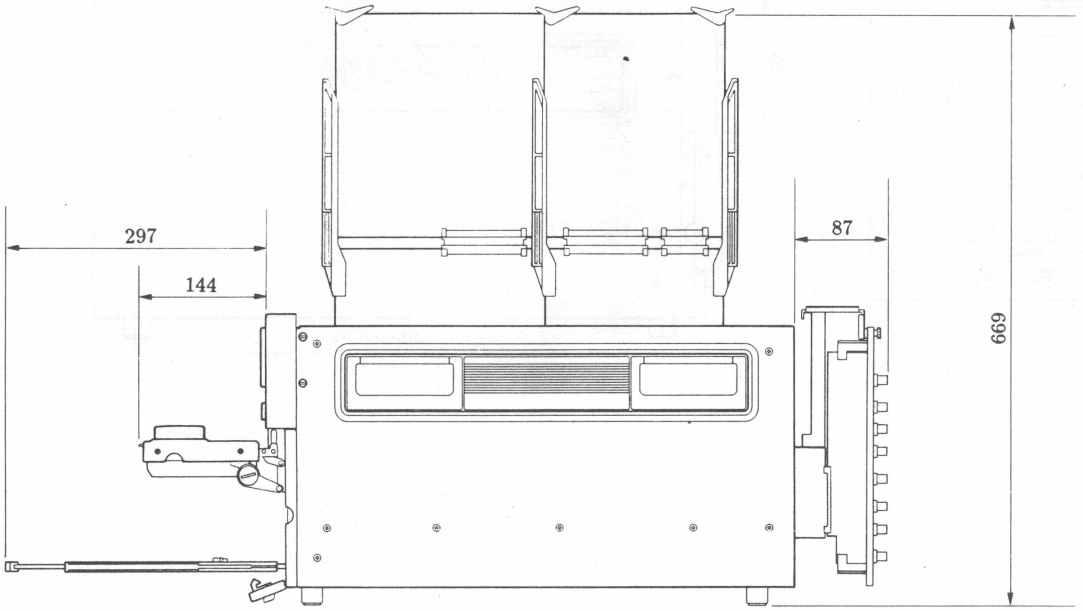

External Dimentions When Rack-Mounting

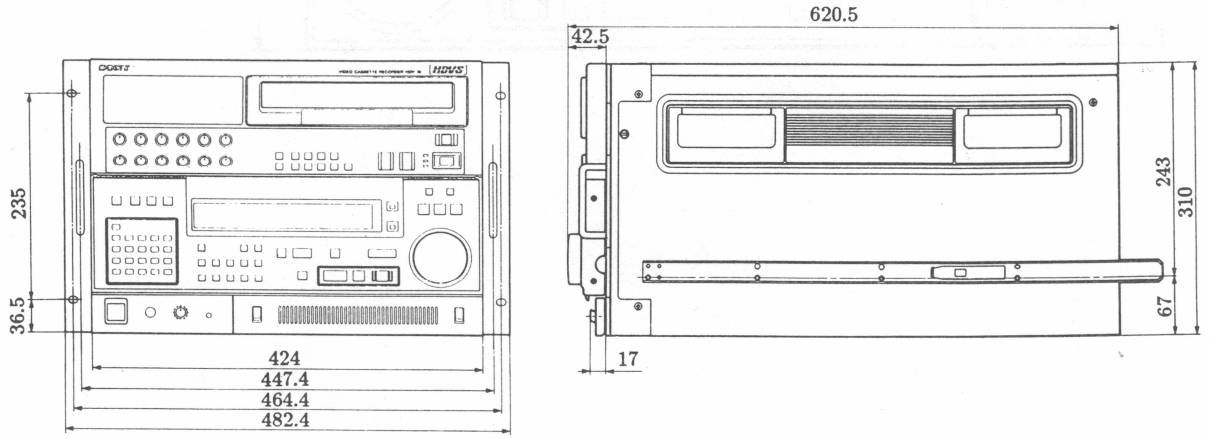

1-6. RACK-MOUNTING

The unit can be mounted in a 19-inch standard rack.
In this case, use Rack Mount Rail, RMM-18DV (DVR RACK MOUNT RAIL), optional accessory.

NOTE:

1. When several units are mounted in a rack, it is recommended that a fan is installed for ventilation. Good air circulation is essential to prevent internal heat built-up in a rack (5 to 40°C must be met for all units).

2. Do not remove the top panel and bottom panel during rack mounting.

3. Be sure to secure the rack to the floor to avoid accidents when the unit is puled out.

4. Space more than 25mm between the bottom intake and the lower unit when rack-mounting.

How to install:

1. Attach the rack angles and inner members.
   Attach the rack angles using the four screws (B4×10) and four washers (W4) which secured the panels. Remove the feet from the unit if necessary.

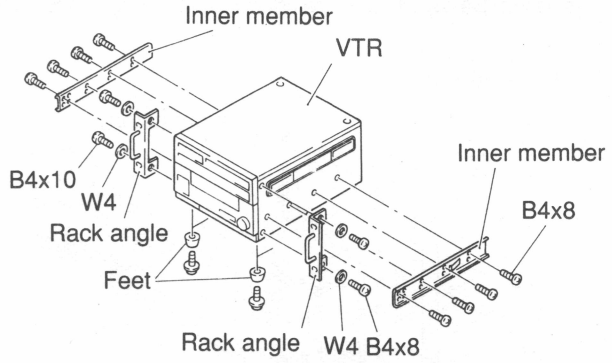

[Position where the inner member is to be attached]

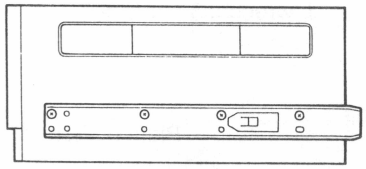

2. Slide the outer member ② so that the screw holes of outer member ① can be seen.
   Mount the bracket to outer member ① temporarily with screws (B4×8) and plate nuts (long).

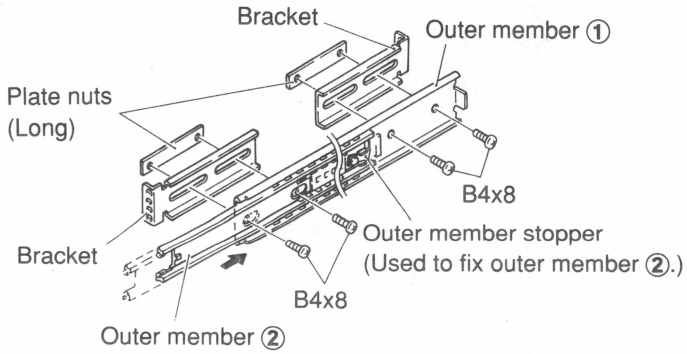

3. Mount the outer member ass'y to the rack temporarily with screws (C4×12), washers (w4), and plate nuts (small). Adjust the outer member position to meet the specification as shown in the figure. After adjustment, tighten the screws (B4×8) which were tightened temorarily in Step 2.

[Universal Type]

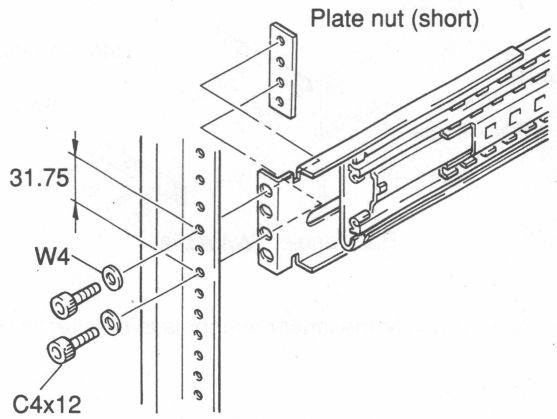

L wrench: 3 mm/side

[Wide Type]

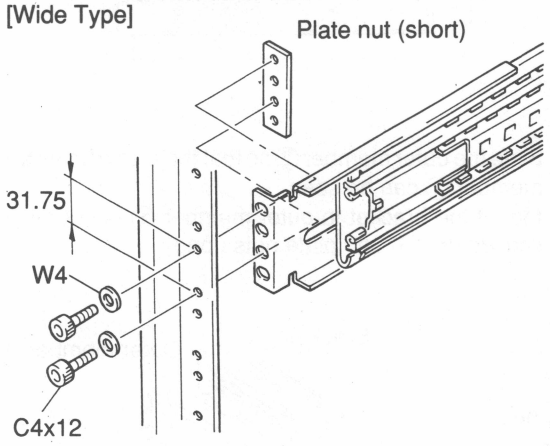

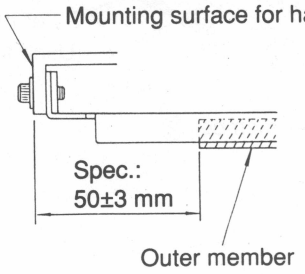

4. When mounting into a rack, release the stoppers. Mount the unit and tighten the screw which was tightened temporarily in Step 3 after checking that the VTR slides smoothly.

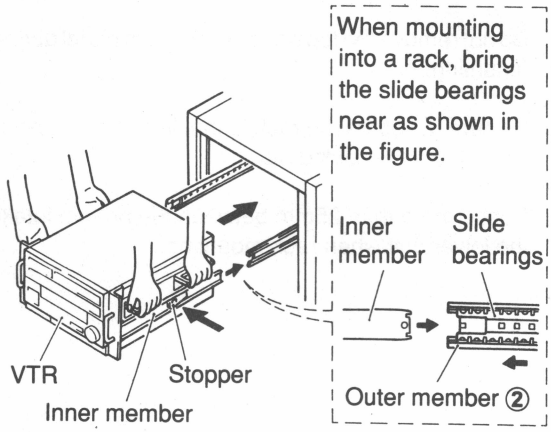

1-7. INPUT/OUTPUT INTERFACE

1-7-1. Matching Connectors and Cables

HDV-10 side connector		Mating connector/cable	
Application	Description	Description	Sony part No.
VIDEO IN G/B/R, Y/P_B/P_R, SYNC VIDEO OUT G/B/R, Y/P_B/P_R, SYNC VIDEO MONITOR OUT Y, G/B/R, Y/P_B/P_R WFM OUT WAVE FORM TRIGGER OUT SPARE 1 (NOTE 1) SPARE 2 (NOTE 2)	BNC	BNC	
ANALOG AUDIO IN 1 ANALOG AUDIO IN 2 ANALOG AUDIO IN 3 ANALOG AUDIO IN 4	XLR, 3 pin, female	XLR, 3 pin, male	1-508-084-11 CANNON XLR-3-12C Equivalent
ANALOG AUDIO OUT 1 ANALOG AUDIO OUT 2 ANALOG AUDIO OUT 3 ANALOG AUDIO OUT 4	XLR, 3 pin, male	XLR, 3 pin, female	1-508-083-11 CANNON XLR-3-11C Equivalent
DIGITAL AUDIO IN 1/2 DIGITAL AUDIO IN 3/4 DIGITAL AUDIO OUT 1/2 DIGITAL AUDIO OUT 3/4	XLR, 3 pin, female XLR, 3 pin, female XLR, 3 pin, male XLR, 3 pin, male	XLR, 3 pin, male XLR, 3 pin, male XLR, 3 pin, female XLR, 3 pin, female Digital audio cable ECD-3C/10C/30C	1-508-084-11 1-508-083-11 Optional accessory (NOTE 2)
TIME CODE IN	XLR, 3 pin, female	XLR, 3 pin, male	1-508-084-11
TIME CODE OUT	XLR, 3 pin, male	XLR, 3 pin, female	1-508-083-11
CUE IN	XLR, 3 pin, female	XLR, 3 pin, male	1-508-084-11
CUE OUT	XLR, 3 pin, male	XLR, 3 pin, female	1-508-083-11
MONITOR L/R	XLR, 3 pin, male	XLR, 3 pin, female	1-508-083-11
REMOTE-2A IN REMOTE-2A OUT REMOTE-2B IN/OUT	D-sub, 9 pin, female	D-sub, 9 pin, male 9 pin remote control cable RCC-5G/10G/30	1-509-140-00 Optional accessory (NOTE 3)
VA CONTROL REMOTE-1	D-sub, 15 pin, female D-sub, 25 pin, female	D-sub, 15 pin, male D-sub, 25 pin, male	1-566-355-11 1-566-356-11
CONTROL PANEL	MULTI, 8 pin	Control panel cable 1-559-002-51(1.5m)	Optional accessory 1-558-692-11 (0.8m) 1-559-936-11 (10m) (NOTE 4)
HEADPHONES	6 ϕ phone jack	6 ϕ phone plug	

NOTE1: Spare connector
SPARE-1: HD OUT, SPARE-2: VD OUT
Change the above spare connector for your purpose properly.
NOTE2: Digital Audio Input/Output cables (Length: 3m, 10m, 30m)
NOTE3: Length: 5m, 10m, 30m
NOTE4: One cable (1.5m) is supplied to HDV-10.

1-7-2. Signal Inputs and Outputs

① VIDEO

Connector	Specification
VIDEO IN (ANALOG)	
G/B/R, Y/P_B/P_R	1.0Vp-p±1dB, 75Ω (G/B/R or Y/P_B/P_R selectable)
SYNC	±0.3V±1dB, 75Ω
VIDEO OUT (ANALOG)	
G/B/R, Y/P_B/P_R	0.7Vp-p (video), ±0.3V (sync), 75Ω (G/B/R or Y/P_B/P_R selectable)
SYNC	±0.3V, 75Ω
MONITOR OUT	
Y, G/B/R, Y/P_B/P_R	0.7Vp-p (video), ±0.3V (sync), 75Ω (Yor G/B/R or Y/P_B/P_R selectable)
WFM OUT	
G/B/R/Y/P_B/P_R	0.7Vp-p (video), ±0.3V (sync), 75Ω
WFM TRIGGER OUT	0.3Vp-p, 75Ω
SPARE-1 OUT	HD: 2Vp-p, OPEN
SPARE-2 OUT	VD: 2Vp-p, OPEN

② AUDIO

Connector	Specification.
AUDIO INPUT	
ANALOG	
DA-1~DA-4 (XLR)	–16dBm~+10dBm, 150Ω/600Ω/10kΩ, balanced
CUE (XLR)	–16dBm~+10dBm, 600Ω, balanced (Microphone input: –60dBs)
DIGITAL	
DA-1/2, DA-3/4	AES/EBU format
ANALOG OUTPUT	
ANALOG	
DA-1~DA-4 (XLR)	+4dBm nominal, 600Ω balanced
CUE (XLR)	+4dBm nominal, 600Ω balanced
MONITOR L, R (XLR)	+4dBm, 600Ω balanced L/R channels, analog audio signals are selectable.
HEADPHONES	8Ω, unbalanced, variable level
DIGITAL	
DA-1/2, DA-3/4	AES/EBU format

③ Time Code

Connector	Specification
TIME CODE INPUT	SMPTE/EBU time code, 600Ω, balanced
TIME CODE OUTPUT	SMPTE/EBU time code, 600Ω, balanced

④ REMOTE-1 (RS-232C)

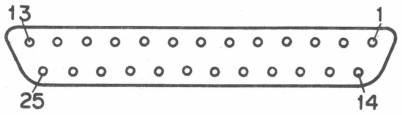

Pin No.	Signal Name	Signal Level	Content
1	GND		
2	TxD 232C		
3	RxD 232C		
4	RTSB		
5	CTSB		
6	DSR		
7	GND		
8	NC		
9	NC		
10	NC		
11	NC		
12	NC		
13	NC		
14	NC		
15	NC		
16	NC		
17	NC		
18	NC		
19	NC		
20	DTR		
21	NC		
22	NC		
23	NC		
24	NC		
25	NC		

⑤ REMOTE-2A IN
REMOTE-2A OUT
REMOTE-2B IN/OUT

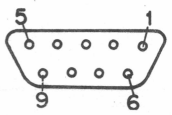

Pin No.	Signal Name	Signal Level	Content
7	MASTER IN (+)		SONY 9PIN REMOTE INTERFACE
2	MASTER IN (–)		
6	GND		
3	MASTER OUT (+)		
8	MASTER OUT (–)		
4	GND		
1	FRAME GND		
9	FRAME GND		
5	PRIORITY IN/OUT		

⑥ VA CONTROL

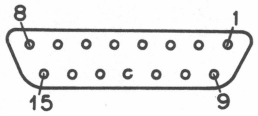

Pin No.	Signal Name	Signal Level	Content
7	MASTER IN (+)		AES/EBU FORMAT
14	MASTER IN (–)		
4	GND		
8	MASTER OUT (+)		
15	MASTER OUT (–)		
6	DIGITAL AUDIO OUT 1,2 CH (+)		
13	DIGITAL AUDIO OUT 1,2 CH (–)		
5	DIGITAL AUDIO OUT 3,4 CH (+)		
12	DIGITAL AUDIO OUT 3,4 CH (–)		
1	FRAME GND		
2	NC		
3	NC		
9	NC		
10	NC		
11	NC		

⑦ REMOTE (mini jack)

For simple remote control by SIRCS

1-8. SWITCH/JUMPER/MENU SETTINGS

1-8-1. Initial Setting Menu

Initial settings are set by the menu operation. The contents of setting menu can be saved and restored by a NOVRAM (nonvolatile RAM) according to the individual need.
For details, refer to the operation manual.

1-8-2. Switch/Jumper/Indicator/Volume Settings

ADA-14 board

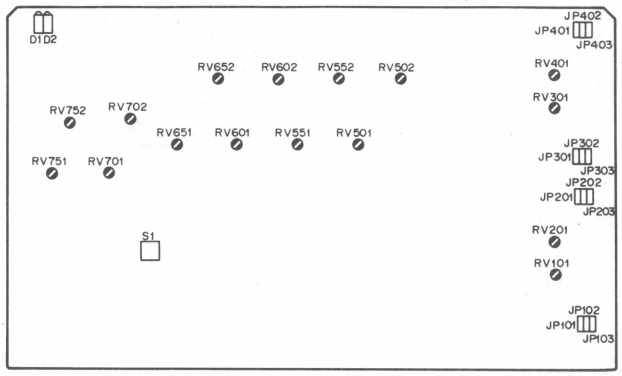

Indicator

D1: DIGITAL IN 1/2 indicator (green)
Lights when DA-1/2 digital input signal is being synchronized.
Turns on and off when DA-1/2 digital input signal is not being synchronized even though this signal is input.

D2: DIGITAL IN 3/4 indicator (green)
Lights when DA-3/4 digital input signal is being synchronized.
Turns on and off when DA-3/4 digital input signal is not being synchronized even though this signal is input.

Volume

RV101: INPUT LEVEL volume
Adjusts DA-1 input level.
When the unit is shipped, it is set to +4dBm as standard level.

RV201: INPUT LEVEL volume
Adjusts DA-2 input level.
When the unit is shipped, it is set to +4dBm as standard level.

RV301: INPUT LEVEL volume
Adjusts DA-3 input level.
When the unit is shipped, it is set to +4dBm as standard level.

RV401: INPUT LEVEL volume
Adjusts DA-4 input level.
When the unit is shipped, it is set to +4dBm as standard level.

RV501: MSB ADJ volume
Adjusts DA-1 distortion factor.
When the unit is shipped, it is set to the minimum distortion factor.

RV502: OUTPUT LEVEL volume
Adjusts DA-1 output level.
When the unit is shipped, it is set to +4dBm as standard level.

RV551: MSB ADJ volume
Adjusts DA-2 distortion factor.
When the unit is shipped, it is set to the minimum distortion factor.

RV552: OUTPUT LEVEL volume
Adjusts DA-2 output level.
When the unit is shipped, it is set to +4dBm as standard level.

RV601: MSB ADJ volume
Adjusts DA-3 distortion factor.
When the unit is shipped, it is set to the minimum distortion factor.

RV602: OUTPUT LEVEL volume
Adjusts DA-3 output level.
When the unit is shipped, it is set to +4dBm as standard level.

RV651: MSB ADJ volume
Adjusts DA-4 distortion factor.
When the unit is shipped, it is set to the minimum distortion factor.

RV652: OUTPUT LEVEL volume
Adjusts DA-4 output level.
When the unit is shipped, it is set to +4dBm as standard level.

RV701: MSB ADJ volume
Adjusts MONITOR L distortion factor.
When the unit is shipped, it is set to the minimum distortion factor.

RV702: OUTPUT LEVEL volume
Adjusts MONITOR L output level.
When the unit is shipped, it is set to +4dBm as standard level.

RV751: MSB ADJ volume
Adjusts MONITOR R distortion factor.
When the unit is shipped, it is set to the minimum distortion factor.

RV752: OUTPUT LEVEL volume
Adjusts MOMITOR R output level.
When the unit is shipped, it is set to +4dBm as standard level.

Jumper

Input Impedance setting can be changed by setting the following JP (jumper pin).
When the unit is shipped, set to 600Ω.

	JP	600Ω (unit is shipped)	150Ω	HIGH (more than 10kΩ)
DA1	JP101	SHORT	OPEN	OPEN
	JP102	OPEN	SHORT	OPEN
	JP103	OPEN	OPEN	SHORT
DA2	JP201	SHORT	OPEN	OPEN
	JP202	OPEN	SHORT	OPEN
	JP203	OPEN	OPEN	SHORT
DA3	JP301	SHORT	OPEN	OPEN
	JP302	OPEN	SHORT	OPEN
	JP303	OPEN	OPEN	SHORT
DA4	JP401	SHORT	OPEN	OPEN
	JP402	OPEN	SHORT	OPEN
	JP403	OPEN	OPEN	SHORT

Switch

S1: For testing
When the unit is shipped, set all switches to OFF position.

AE-08 board

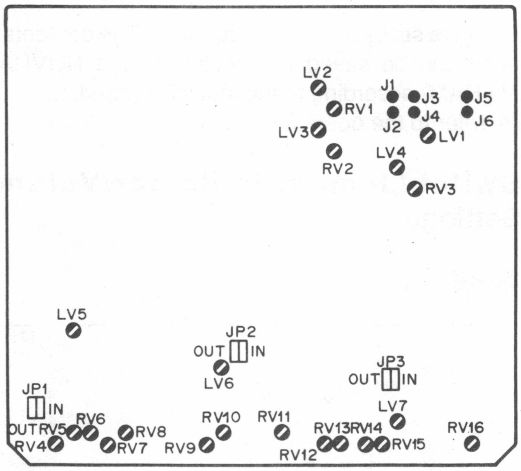

Indicator

D12: REPRODUCED TIME CODE indicator
Lights when a reproduced time code is being produced.

Volume

RV1: TC ERASE volume
Adjusts TC ERASE HEAD current.

RV2: CUE ERASE volume
Adjusts CUE ERASE HEAD current.

RV3: FULL ERASE volume
Adjusts FULL&CTL ERASE HEAD current.

RV4: CUE PB EQ volume
Adjusts CUE PB EQ LEVEL.

RV5: CUE BIAS volume
Adjusts CUE R/P HEAD bias current.

RV6: CUE REC LEVEL volume
Adjusts CUE REC LEVEL.

RV7: CUE REC EQ volume
Adjusts CUE REC EQ LEVEL.

RV8: CUE PB LEVEL volume
Adjusts CUE PB LEVEL.

RV9: CTL REC LEVEL volume
(Applicable to S/N 10001 through 10199)
Adjusts CTL REC LEVEL.

RV10: CTL BIAS volume
Adjusts CTL R/P HEAD bias current.

RV11: CTL PB LEVEL volume
Adjusts CTL PB LEVEL.

RV12: TC REC LEVEL volume
Adjusts TC REC LEVEL.

RV13: CTC-2 volume
Adjusts the crosstalk canceller level from TC to CTL.

RV14: CTC-1 volume
Adjusts the crosstalk canceller waveform from TC.

RV15: TC BIAS volume
Adjusts TC R/P HEAD bias current.

RV16: TC PB LEVEL volume
Adjusts TC PB LEVEL.

RV17: CTC-3 Volume
(Applicable to S/N 10201 and higher)
Adjusts the crosstalk canceller level from TC to CUE.

LV1: FULL MATCHING variable coil
Adjusts ERASE current to the maximum by resonating for ragged level of FULL & CTL ERASE HEAD.

LV2: TC ERASE variable coil
Adjusts TC ERASE current to the maximum by resonating with ERASE frequency.

LV3: CUE ERASE variable coil
Adjusts CUE ERASE current to the maximum by resonating with ERASE frequency.

LV4: FULL ERASE variable coil
Adjusts FULL & CTL ERASE current to the maximum by resonating with ERASE frequency.

LV5: CUE BIAS variable coil
Adjusts CUE BIAS current to the maximum by resonating with BIAS frequency.

LV6: CTL BIAS variable coil
Adjusts CTL BIAS current to the maximum by resonating with BIAS frequency.

LV7: TC BIAS variable coil
Adjusts TC BIAS current to the maximum by resonating with BIAS frequency.

Jumper (Applicable to S/N 10001 through 10199)

J1/2: Adjusts CUE ERASE voltage/current phase difference to the minimum.

J3/4: Adjusts TC ERASE voltage/current phase difference to the minimum.

J5/6: Adjusts so as to be able to resonant on LV1 for ragged level of FULL & CTL ERASE HEAD.

When the unit is shipped, J1/2, J3/4 and J5/6 are set to the suitable position.

JP1: CUE BIAS adjustment jumper pin
JP2: CTL BIAS adjustment jumper pin
JP3: TC BIAS adjustment jumper pin
Normally set to the IN position.
When using extension board EX-213, set to the OUT position.
When the unit is shipped, JP1 to JP3 are set to the IN position.

Switch (Applicable to S/N 10201 and higher)

S1: Adjusts CUE ERASE voltage/current phase difference to the minimum.

S2: Adjusts TC ERASE voltage/current phase difference to the minimum.

S3: Adjusts so as to be able to resonant on LV1 for ragged level of FULL & CTL ERASE HEAD.

When the unit is shipped, S1 to S3 are set to the suitable position.

S4: CUE BIAS adjustment switch
S5: CTL BIAS adjustment switch
S6: TC BIAS adjustment switch
Normally set to the ON position.
When using extension board EX-213, set to the OFF position.
When the unit is shipped, S4 to S6 are set to the ON position.

DEC-50 board

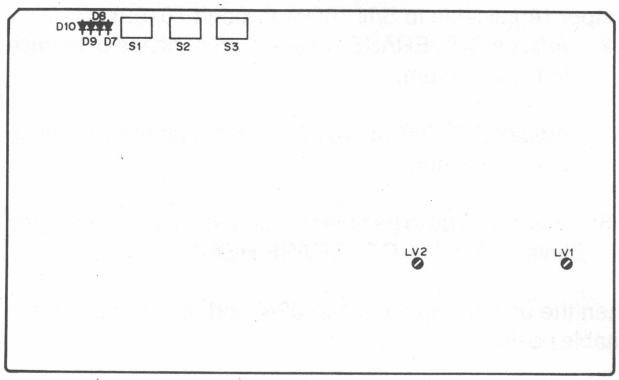

Indicator

D7 (red): Lights when the sample which can not correct the error is detected. (A channel)

D8 (green): Lights when the error correction operates normally. (A channel)

D9 (red): Lights when the sample which can not correct the error is detected. (B channel)

D10 (green): Lights when the error correction operates normally. (B channel)

Volume

LV1: VCO FREQUENCY variable coil
Adjusts PLL oscillating frequency at A channel.
When the unit is shipped, set to TP1 level to the flattest at 2.0 ± 0.5 Vdc.

LV2: VCO FREQUENCY variable coil
Adjusts PLL oscillating frequency at B channel.
When the unit is shipped, it is set to TP7 level to the flattest at 2.0 ± 0.5 Vdc.

Switch

S1: CORRECTION MODE SELECT switch
Sets error correction strategy.
When the unit is shipped, Bit 2 and 6 are set to the OFF position, the others ON.

S2: CORRECTION MODE SELECT switch
Sets error correction strategy.
When the unit is shipped, Bit 2, 4 and 8 are set to the OFF positon, the others ON.

S3: For testing
When the unit is shipped, all switches are set to the OFF position.

DET-3 board

Volume

RV1: TACH 0° DIAL PULSE AMP volume
RV2: TACH 90° DIAL PULSE AMP volume

DM-77 board

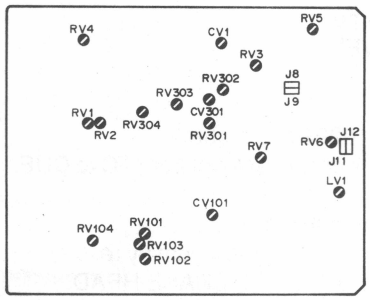

Volume

RV1: V 1CH EQ volume
Adjusts VIDEO CH-1 HEAD playback frequency characteristic.

RV2: V 2CH EQ volume
Adjusts VIDEO CH-2 HEAD playback frequency characteristic.

RV3: V RF P/B LEVEL volume
Sets VIDEO PB RF AGC LEVEL.

RV4: RF METER LEVEL volume
Sets VIDEO PB RF DEMODULATION LEVEL.

RV5: L FREQ MIX volume
Adjusts PB VIDEO RF PROC LPF OUT MIX LEVEL.

RV6: P/B V RES volume
Adjusts the preset of PB VIDEO frequency characteristic.

RV7: D0 LEVEL volume
Adjusts VIDEO PB RF DROP OUT DETECTOR SENS LEVEL.

RV101: HPF volume (Not used.)
Adjusts HPF attenuation.

RV102: NON2 MIX volume (Not used.)
Adjusts NONLINEAR-2 CIRCUIT MIX LEVEL.

RV103: OUT LEVEL volume (Not used.)
Adjusts NONLINEAR-2 CIRCUIT OUT LEVEL.

RV104: NON1 MIX volume
Adjusts NONLINEAR-1 CIRCUIT MIX LEVEL.

RV301: A EQ volume
Adjusts the preset of AUDIO HEAD PB frequency characteristic.

RV303: A P/B LEVEL volume
Sets AUDIO PB RF AGC LEVEL.

CV1: TRAP FREQ trimmer capacitor
Adjusts VIDEO RF ERASE TRAP.

CV101: MATCH trimmer capacitor
Matches the drive of delay line DL8.

CV301: TRAP FREQ trimmer capacitor
Adjusts AUDIO RF ERASE TRAP.

LV1: EQ coil
Equalizes MOIRE attenuation.

Jumper

J8, J11: During shorted between J8 and J11, signal passes through RF PROCESSOR circuit.

J9, J12: During shorted between J9 and J12, signal bypasses RF PROCESSOR circuit.

ED-23 board

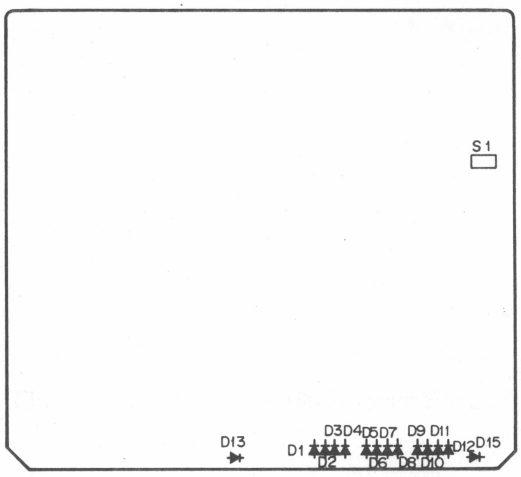

Indicator

D1 to D12:
DIGITAL AUDIO COMPENSATION indicators
Lights to indicate how digital audio errors have been compensated for.

- D1 to D4 (red):
  MUTING indicators
  Light when an absence of 4 or more data samples is compensated for by muting.
  D1 to D4 correspond to DA-1 to DA-4.

- D5 to D8 (yellow):
  HOLDING indicators
  Light when an absence of 2 or more data samples is compensated for by holding.
  D5 to D8 correspond to DA-1 to DA-4.

- D9 to D12(green):
  AVERAGING indicators
  Light when an absence of 1 or more data samples is compensated for by averaging.
  D9 to D12 correspond to DA-1 to DA-4.

D13 (green): REFERENCE SYNC indicator
Stays lit while the reference SYNC signal for video is present.

D15 (green): CLOCK indicator
Stays lit while the VCXO oscillator on ED-23 board is operating.

Switch

S1-1: FIELD FREQUENCY ON/OFF switch
ON: 59.94 Hz
OFF: 60.00 Hz
S1-2 to 1-4: Factory Use

When the unit is shipped, all switches are set to the OFF position.

ENC-12 board

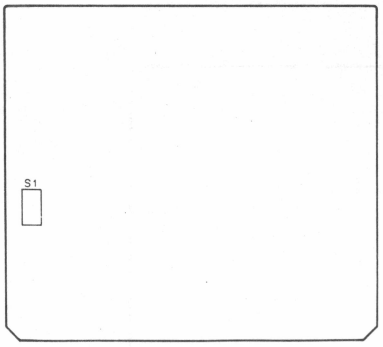

Switch

S1: For testing
When the unit is shipped, all switches are set to the OFF position.

IF-241 board

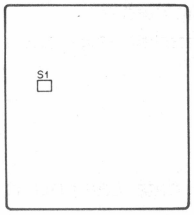

Switch

S1: Factory use only

IO-43 board

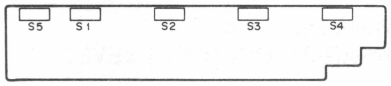

Switch

S1: 75Ω TERMINATER switch
Used for G/Y input termination.
When the unit is shipped, it is set to the ON position.

S2: 75Ω TERMINATER switch
Used for B/P_B input termination.
When the unit is shipped, it is set to the ON position.

S3: 75Ω TERMINATER switch
Used for R/P_R input termination.
When the unit is shipped, it is set to the ON position.

S4: 75Ω TERMINATER switch
Used for SYNC input termination.
When the unit is shipped, it is set to the ON position.

S5: Y/P_B/P_R, G/B/R SELECT switch
Switches INPUT MATRIX ON/OFF.
When the unit is shipped, it is set to the Y/P_B/P_R position.

IO-53 board

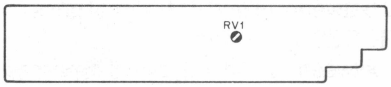

Volume

RV1: WFM LEVEL volume
Adjusts WFM OUTPUT SIGNAL LEVEL.

IO-44 board

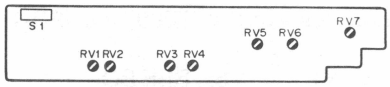

Volume

RV1: NORMAL Y/G LEVEL volume
Adjusts NORMAL Y/G OUTPUT VIDEO LEVEL.

RV2: BYPASS Y/G LEVEL volume
Adjusts BYPASS Y/G OUTPUT VIDEO LEVEL.

RV3: NORMAL P_B/B LEVEL volume
Adjusts NORMAL P_B/B OUTPUT VIDEO LEVEL.

RV4: BYPASS P_B/B LEVEL volume
Adjusts BYPASS P_B/B OUTPUT VIDEO LEVEL.

RV5: NORMAL P_R/R LEVEL volume
Adjusts NORMAL P_R/R OUTPUT VIDEO LEVEL.

RV6: BYPASS P_R/R LEVEL volume
Adjusts BYPASS P_R/R OUTPUT VIDEO LEVEL.

RV7: OUT SYNC LEVEL volume
Adjusts OUTPUT SYNC LEVEL.

Switch

S1: Y/P_B/P_R, G/B/R SELECT switch
Selects OUTPUT MATRIX.
When the unit is shipped, it is set to the Y/P_B/P_R position.

IV-23 board

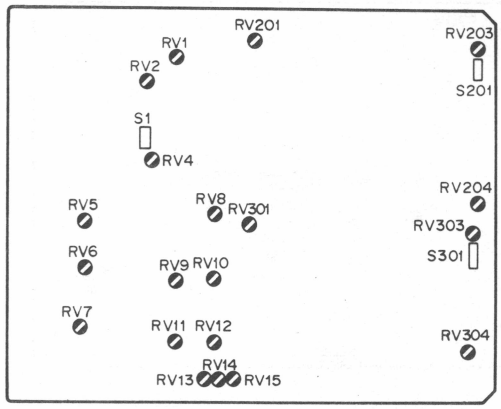

Volume

RV1: Y GAIN volume
RV2: Y COMP volume
RV4: OFFSET volume
RV5: Y/G AGC volume
RV6: P_B/B AGC volume
RV7: P_R/R AGC volume
RV8: G ADJ volume
RV9: P_B ERROR COMP volume
RV10: B ADJ volume
RV11: P_R ERROR COMP volume
RV12: R ADJ volume
RV13: Y/G LEVEL volume
RV14: P_B/B LEVEL volume
RV15: P_R/R LEVEL volume
RV201: P_B GAIN 1 volume
RV203: P_B COMP volume
RV204: P_B GAIN 2 volume
RV301: P_R GAIN 1 volume
RV303: P_R COMP volume
RV304: P_R GAIN 2 volume

Switch

S1: Y COMP ON/OFF switch
When the unit is shipped, S1-1 is set to the OFF position and S1-2 to the ON position. S/N 10401 and higher, S1 is set to the OFF position.

S201: P_B COMP ON/OFF switch
When the unit is shipped, it is set to the OFF position.

S301: P_R COMP ON/OFF switch
When the unit is shipped, it is set to the OFF position.

IPR-1 board

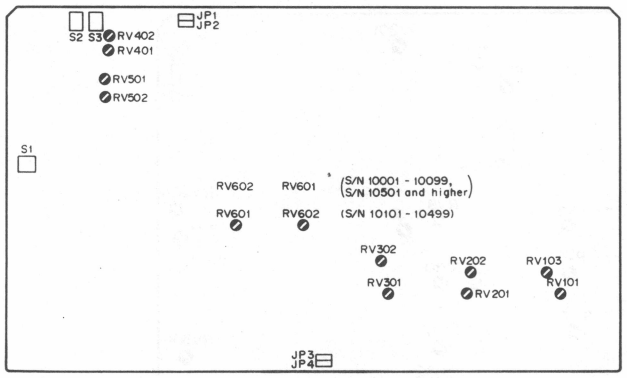

Volume

RV101: Y A/D INPUT LEVEL volume
RV103: Y SET UP LEVEL volume
RV201: P_B A/D INPUT LEVEL volume
RV202: P_B SET UP LEVEL volume
RV301: P_R A/D INPUT LEVEL volume
RV302: P_R SET UP LEVEL volume
RV401: A-CH DA LEVEL volume
RV402: A-CH VIDEO OUT LEVEL volume
RV501: B-CH DA LEVEL volume
RV502: B-CH VIDEO OUT LEVEL volume
RV601: P_B DL volume
RV602: P_R DL volume

Jumper

JP1: SG (S3) jumper
JP2: SG (CONPANE) jumper
JP1 and JP2 are in pairs.
During shorted JP1, TEST SG can be selected at S3 on IPR-1 board.
During shorted JP2, TEST SG can be selected on control panel.
When the unit is shipped, JP2 is shorted.

JP3: WFM (CONPANE) jumper
JP4: WFM (S2) jumper
JP3 and JP4 are in pairs.
During shorted JP3, WFM can be selected with the function control panel.
During shorted JP4, WFM can be selected at S2 on IPR-1 board.
When the unit is shipped, JP3 is shorted.

Switch

S1: SEG H RST SHIFTER switch

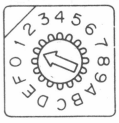

Changes the standard phase of TCI signal.
When the unit is shipped, it is set to the "1" position.

S2: WFM SELECT switch
Selects the waveform observed at TP607 on IPR-1 board.

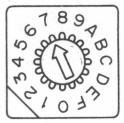

0: AD Y1
1: AD Y2
2: AD P_B
3: AD P_R
4: REF AO
5: REF AE
6: REF BO
7: REF BE
8: FMTCI A
9: FMTCI B
A: 3HD B CH

When the unit is shipped, it is set to the "7" position.

S3: TEST SG SELECT switch
Selects the TEST signal in IPR-1 board.

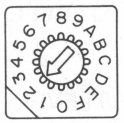

0: INPUT VIDEO
1: BLACK
2, 3: COLOR BAR
4, 5: X
6, 7: DLC
8, 9: ID
A, B: PULSE & BAR
C, D: MULTI BURST
E, F: LINEARITY

When the unit is shipped, it is set to the "2" position.

KC-14 board

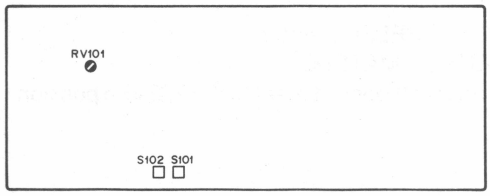

Volume

RV101: +5V adjustment volume

Switch

S101: RESET switch
Resets the function control panel.
When this switch is pushed, it is same situation on the function control panel with that the power is turned OFF and then ON.

S102: TEST switch
When this switch is pushed, it enters PANEL menu of TEST menu.
Refer to Section 3-3. Maintenence Menu.

MD-65 board

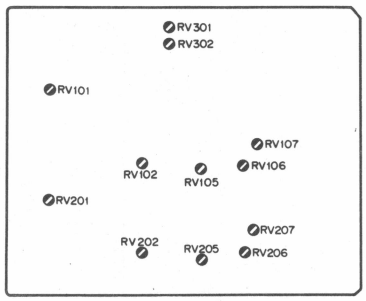

Volume

RV101: CH-A VIDEO LEVEL volume
RV201: CH-B VIDEO LEVEL volume
Matches the signal level input to MD-65 board.

RV102: CH-A VIDEO LEVEL volume
RV202: CH-B VIDEO LEVEL volume
Matches the signal level input to NON LINEAR circuit.

RV105: CH-A NHK NON LINEAR MIX LEVEL volume
RV205: CH-B NHK NON LINEAR MIX LEVEL volume

RV106: CH-A CARRIER BALANCE volume
RV206: CH-B CARRIER BALANCE volume
Eliminate three-dimentional high waveform.

RV107: CH-A VIDEO RF LEVEL volume
RV207: CH-B VIDEO RF LEVEL volume

RV301: CH-D AUDIO RF LEVEL volume
RV302: CH-B AUDIO RF LEVEL volume

PC-56 board

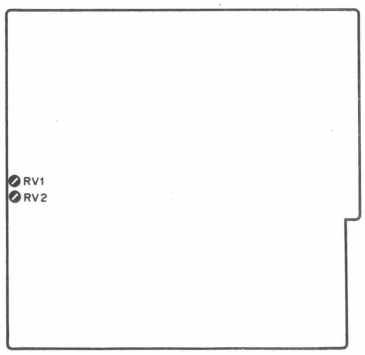

Volume

RV1: D +5V adjustment volume
Adjusts DIGITAL +5V voltage.

RV2: A +5V adjustment volume
Adjusts ANALOG +5V voltege.

PC-57 board

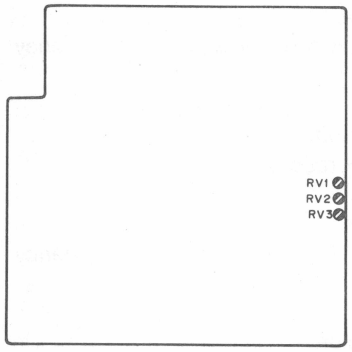

Volume

RV1: –5V voltage adjustment volume
Adjusts –5V voltage.

RV2: –12V voltage adjustment volume
Adjusts –12V voltage.

RV3: +12V voltage adjustment volume
Adjusts +12V voltage.

RE-70 board

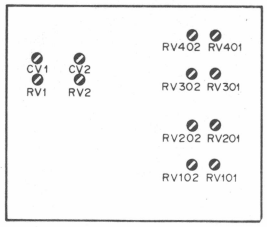

Volume

RV1: ERASE CURRENT volume
Adjusts CH-1 ERASE current.

RV2: ERASE CURRENT volume
Adjusts CH-2 ERASE current.

RV101: RA-1 DUMP volume
Adjusts REC A-1CH recording current frequency charasteristic.

RV102: RA-1 CURRENT volume
Adjusts REC A-1CH recording current.

RV201: RA-2 DUMP volume
Adjusts REC A-2CH recording current frequency characteristic.

RV202: RA-2 CURRENT volume
Adjusts REC A-2CH recording current.

RV301: RB-1 DUMP volume
Adjusts REC B-1CH recording current frequency characteristic.

RV302: RB-1 CURRENT volume
Adjusts REC B-1CH recording current.

RV401: RB-2 DUMP volume
Adjusts REC B-2CH recording current frequency characteristic.

RV402: RB-2 CURRENT volume
Adjusts REC B-2CH recording current.

CV1: ERASE FREQ trimmer capacitor
Adjusts CH-1 ERASE current frequency.

CV2: ERASE FREQ trimmer capacitor
Adjusts CH-2 ERASE current frequency.

SG-169 board

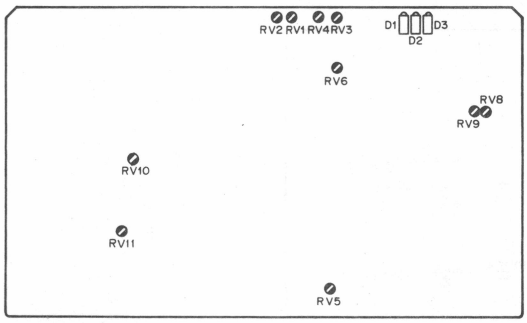

Indicator

D1: INTERNAL indicator (orange)
Indicates INTERNAL mode.
Enters SYSTEM INTERNAL when there are no EXT SYNC and INPUT Y/G modes.

D2: GENERATOR LOCK indicator (green)
Lights when PLL is locked to EXT SYNC and INPUT Y/G modes.

D3: GENERATOR UNLOCK indicator (red)
Lights when PLL is not locked to EXT SYNC and INPUT Y/G modes.

Jumper

JP1: C Phase adjustment jumper pin
When the unit is shipped, C output phase difference is set to less than 5nS.

JP2: Y Phase adjustment jumper pin
When the unit is shipped, Y output phase difference is set to less than 5nS.

Volume

RV1: FRONT PORCH BLK volume
Adjusts H blanking front porch.

RV2: BACK PORCH BLK volume
Adjusts H blanking back porch.

RV3: VELO GAIN volume
Adjusts VELOCITY ERROR compensation gain.

RV4: Y DL volume
Adjusts Y output signal phase.

RV5: MOD BAL volume
Adjusts VELOCITY ERROR compensation modulation balance.

RV6: SYNC PH volume
Adjusts SYSTEM SYNC phase preset.

RV8: 60.00 ADJ volume
Adjusts 60Hz INTERNAL frequency.

RV9: 59.94 ADJ volume
Adjusts 59.94 INTERNAL frequency.

RV10: C DL volume
Adjusts P_B and P_R output signal phase.

RV11: WFM OFFSET ADJ volume
Adjusts WFM output offset.

SMB-8 board

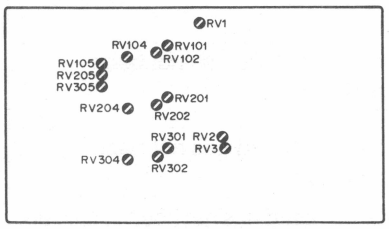

Volume

RV1: Y MTX volume
RV2: SYNC OFFSET volume
RV3: SYNC AGC volume
RV101: Y/G SYNC OFFSET volume
RV102: Y/G SYNC LEVEL volume
RV104: Y/G OFFSET volume
RV105: Y/G AGC volume
RV201: P_B/B SYNC OFFSET volume
RV202: P_B/B SYNC LEVEL volume
RV204: P_B/B OFFSET volume
RV205: P_B/B AGC volume
RV301: P_R/R SYNC OFFSET volume
RV302: P_R/R SYNC LEVEL volume
RV304: P_R/R OFFSET volume
RV305: P_R/R AGC volume

SY-144 board

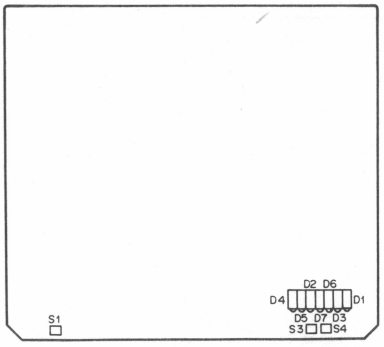

This circuit board is for overall system control.
It recognizes the input signals such as those from the control panels or a remote controller and outputs the corresponding signals to the relevant internal circuit boards. It has two CPUs referred to as system A (V25) and system B (V33), respectively.

Indicator

D1: TIME CODE READ indicator (green)
Lights when a time code is read.

D2: SYSTEM B CONDITION indicator (green)
Stays lit while system B is operating normally.

D3: SYSTEM A CONDITION indicator (green)
Stays lit while system A is operating normally.

D4: SYSTEM B CLOCK CONDITION indicator (green)
Stays lit while the CPU clock of system B is operating normally.

D5: SYSTEM B DATA STROBE indicator (green)
Lights when the CPU of system B reads data normally.

D6: SYSTEM A DATA STROBE indicator (green)
Lights when the CPU of system A reads data normally.

D7: SYSTEM A CLOCK CONDITION indicator (green)
Stays lit while the CPU clock of system A is operating normally.

Switch

S1: RESET switch
Resets the sysytem.
When this switch is turned to the ON position, it is same situation in the unit with that the power is turned OFF and then ON.

S3: TEST switch
S4: TEST switch
When 0 key of 21 key part is pushed during pushing S3 or S4, entered to TTP ADJ menu of TEST menu.
Refer to Section 3-3 "Maintenance Menu."

SV-116 board

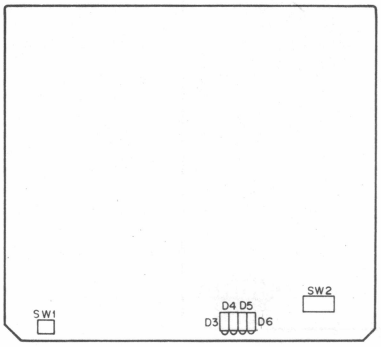

Indicator

D2: SERVO SYSTEM ERROR indicator

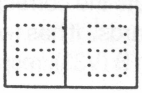

A two-digit LED indicator which shows a flashing hexadecimal error code when the CPU detects a servo system error.
The error codes are as follows:

Error code	Meaning
(00)	(The servo system is operating normally.)
01	Servo test mode
02-09, 0A	Hardware fault in the servo system CPU
0B	CPU malfunction detected by the watching dog timer on SV-116 board. Reset the power so as to release the error.
0C	Abnormal primary input voltage (for example, due to an instantaneous power failure) in the power supply unit. Reset the power so as to release the error.
0D	Servo system error detected on SY-144 board. Reset the power so as to release the error.
0F	Servo debug mode Under this error code, CPU does not operate. Set SW2-8 on SV-116 board to the OFF position and then reset the power of the unit.
10	+12V power supply is not rised.
11	Abnormal voltage in +5V power supply
12	Abnormal voltage in +12V power supply
13	Abnormal voltage in +15V power supply
14	Abnormal voltage in -5V power supply
15	Abnormal voltage in -12V power supply
20	ICJ13 on SV-116 board has not been initialized correctly.

Error Code	Meaning
21	ICE7 on SV-116 board has not been initialized correctly.
22	ICK15 on SV-116 board has not been initialized correctly.
23	ICK13 on SV-116 board has not been initialized correctly.
24	ICC7 on RM-68 board has not been initialized correctly.
26	ICH15 on SV-116 board has not been initialized correctly.
27	ICE11 on SV-116 board has not been initialized correctly.
28	ICB4 on RM-68 board has not been initialized correctly.
29	ICA4 on RM-68 board has not been initialized correctly.
2A	ICF15 on SV-116 board has not been initialized correctly.
2B	ICE7 on RM-68 board has not been initialized correctly.
2C	Disconnection of the harness between RM-68 board and SW-435 board. Check CN387 on RM-68 board.
2D	Channel-0 of ICB4 on RM-68 board has not been initialized correctly.
2E	Channel-1 of ICB4 on RM-68 board has not been initialized correctly.
2F	Channel-2 of ICB4 on RM-68 board has not been initialized correctly.
30	Fault in the cassette compartment
31	Fault in the cassette-in sensor
32	Fault in the cassette-up sensor
33	Fault in the cassette-down sensor
34	Fault in the tape beginning sensor
35	Fault in the tape end sensor
36	Fault in the drum control system
39	Fault in the ID hole sensor of the cassette
3A	Condensation on the drum Leave the drum so as to clear the condensation.
42	Tape slackening has happened during playback. Eject the cassette. The command except for EJECT key are not accepted.

Error Code	Meaning
43	Take-up reel does not round the tape when cassette unload. Fault in the take-up side of reel motor. Remove the tape manually and check the reel motor with TEST mode.
44	Fault in the cassette tape Use normal cassette tape.
50	Abnormal current in the cassette compartment motor Check the mechanical part whether or not the cassette compartment motor is given mechanical load.
51	The cassette has not been loaded or ejected within the prescribed time. Check the cassette compartment motor with TEST mode.
60	Fault in FG-A of take-up side
61	Fault in FG-B of take-up side
62	Fault in FG-A of supply side
63	Fault in FG-B of supply side
64	Fault in FG-A of capstan
65	Fault in FG-B of capstan
70	Parameter back-up memory has not been initialized. This happens when RM-68 board is replaced or ICC8 on RM-68 board is replaced. Initialize the NOVRAM.
71	Fault in recalling of parameter back-up memory
72	Fault in saving-up of parameter back-up memory
73	Checksum error has happened when recalling parameter back-up memory data.
81	SYSTEM READY signal has not been active.
82	The data from SY-144 board has not been set on DUAL PORT RAM between SY-144 board and SV-116 board.
90	Fault in the drum motor drive voltage Check the +15V output voltage and the drum motor driver on SV-116 board.
91	Drum motor drive current can not supply. Check the connection of harness between SMB-7 board and the drum motor.
92	Excessive drive current flows to drive motor. Check the drum motor whether or not it is given mechanical load.
93	PG PULSE of drum motor has not been input. Check the connection of harness between RM-68 board and the drum motor.
94	FG PULSE of drum motor has not been input. Check the connection of harness between RM-68 board and the drum motor.
95	DRUM REF signal has not been input.
96	Drum phase can not be locked. Fault in the circuit of RM-68 board

D3: DRUM SERVO STATUS indicator
Indicates the operating status of the drum servo system.
ON: The drum servos for speed and phase control are both locked.
FLASHING: The drum servo for speed control is locked, but that for phase control is not.
OFF: The drum is stopped.

D4: CAPSTAN SERVO STATUS indicator
Indicates the capstan servo status during normal playback (normal-speed forward playback).
ON: The capstan servo for speed control and CTL phase control are both locked.
FLASHING: The capstan servo for speed control is locked, but that for CTL phase control is not.
OFF: Either the capstan is stoped or the unit is not in PLAY mode for normal playback.

D5: Not used.

D6: Lights when DC tension servo is ON.
When this indicator turns off, turn on SW2-5.

Switch

SW1: CPU RESET switch

Resets servo CPU and at the same time, sets motor drive voltage to the OFF position, take-up and supply sides reel brake to the ON position, and capstan pinch roller to the OFF position.
Used for service.

SW2: SYSTEM switch (8-bit dip switch)

SW2-1 to SW2-4:
Selects the test signal of RM-68 board observed at TP31 on SV-116 board.

1	2	3	4	Hexa-decimal	Signal
OFF	OFF	OFF	OFF	0	Take-up Reel FG-A
OFF	OFF	OFF	ON	1	Take-up Reel FG-B
OFF	OFF	ON	OFF	2	Supply Reel FG-A
OFF	OFF	ON	ON	3	Supply Reel FG-B
OFF	ON	OFF	OFF	4	Capstan FG-A
OFF	ON	OFF	ON	5	Capstan FG-B
OFF	ON	ON	OFF	6	Drum PG Pulse
OFF	ON	ON	ON	7	Drum FG Pulse
ON	OFF	OFF	OFF	8	Capstan FG XOR (IDF9: CX23028 15 pin)
ON	OFF	OFF	ON	9	Playback CTL
ON	OFF	ON	OFF	A	Tension Arm Position
ON	OFF	ON	ON	B	Tension Arm Differential
ON	ON	OFF	OFF	C	Tape Timer Count Clock
ON	ON	OFF	ON	D	Tape Timer Count Output Pulse
ON	ON	ON	OFF	E	Drum FG (Analog)
ON	ON	ON	ON	F	Drum PG (Analog)

NOTE: When S command is given from the function control panel, the signal selection by the function control panel is given top priority.

SW2-5:

ON: Turns tape tension servo ON.
OFF: Turns tape tension servo OFF.
Normally set to the ON position.

SW2-6, 2-7:

Not used.
Normally set to the OFF position.

SW2-8:

Used for debug.
Normally be sure to set to the OFF position.

TBC-14 board

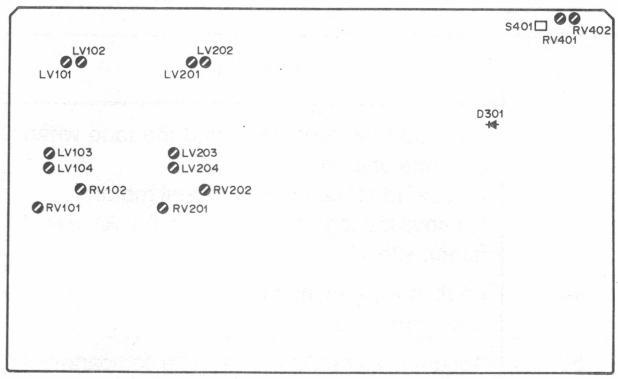

Indicator

D301: REF SAMPLE indicator

Indicates that the level is adjusted by internal generated reference.

Volume

RV101: CH-A WCK OSC LOOP GAIN ADJ volume
RV201: CH-B WCK OSC LOOP GAIN ADJ volume
Adjusts the feed back loop gain of WRITE CLOCK oscillator.

RV102: CH-A VELO ERROR OFFSET ADJ volume
RV202: CH-B VELO ERROR OFFSET ADJ volume
Remove the output offset of VELOCITY detect circuit.

RV401: CH-B LEVEL TRIM 255 ADJ volume
RV402: CH-B LEVEL TRIM 127 ADJ volume
Valid only when S401 is set to the ON position.

LV101/102: CH-A WCK VCO FREQ ADJ variable coil
LV201/202: CH-B WCK VCO FREQ ADJ variable coil
Adjusts the operating point of WRITE CLOCK oscillator.

LV103/104: CH-A WCK VIDEO PHASE ADJ volume
LV203/204: CH-B WCK VIDEO PHASE ADJ volume
Adjusts the operating point of WRITE CLOCK VIDEO phase compensator.

Switch

S401: CH-B LEVEL TRIM ENABLE switch
Used when DLC line can not play back because that the RF waveform is not a stable envelope while the ampliitude increases and decreases.
Make AGC reference DLC→FREQ and then set the signal instead of internal generated DLC to the reference signal. At this time, if the difference between the internal generated signal and the frequency on tape is big, *line-crawling generates.
Set S401 to the ON position and adjust RV401 and RV402 to mininize the *line-crawling.
When the unit is shipped, it is set to the OFF position.

*line-crawling: The situation that horizontal stripe can be seen every one line.

TBC-15 board

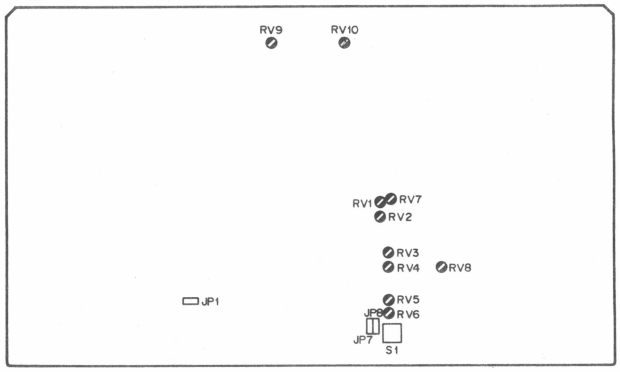

Jumper

JP1: B DL jumper
Adjusts the phase of DA P_B signal.
When the unit is shipped, it is set to the suitable position.

JP7: WFM jumper
Selects the signal to be output to the WAVEFORM connector with Test Mode Menu T02 WFM TEST SELECT, TBC-15 on the function control panel.
When the unit is shipped, it is set to the SHORT position.

JP8: SELF WFM jumper
(Applicable to S/N 10001 through 10199)
Selects the waveform inside of TBC-15 board on S1, only when shorted.
When the unit is shipped, it is set to the OPEN position.

Volume

RV1: Y OFFSET volume
Adjusts DA Y output offset.

RV2: Y GAIN volume
Adjusts DA Y output level.

RV3: B OFFSET volume
Adjusts DA P_B output offset.

RV4: B GAIN volume
Adjusts DA P_B output level.

RV5: R OFFSET volume
Adjusts DA P_R output offset.

RV6: R GAIN volume
Adjusts DA P_R output level.

RV7: VE OFFSET volume
Adjusts VELOCITY ERROR output offset.

RV8: WFM OFFSET volume
Adjusts WFM output offset.

RV9: A-VE INPUT OFFSET volume
RV10: B-VE INPUT OFFSET volume
Adjusts VELOCITY ERROR input offset.

Switch

S1: WFM SELF SELECT switch
(Applicable to S/N 10001 through 10199)
Selects the waveform inside of TBC-15 board, only when JP8 is shorted.
0: A-CH FRAME MY IN VIDEO
1: B-CH FRAME MY IN VIDEO
2: B-CH FRAME MY OUT VIDEO
3: B-CH FIELD MY OUT VIDEO
4: DESCHUFFLED Y ODD DATA
5: DESCHUFFLED Y EVEN DATA
6: DESCHUFFLED CHROMA OUT
7: CHROMA INTERPOLATION OUT

When the unit is shipped, it is set to the "0" position.

SECTION 2
SERVICE INFORMATION

2-1. SPECIFICATIONS

General

Power requirements	100 to 120/200 to 240 V AC ±10% selectable, 50/60 Hz
Power consumption	450 W (650 VA) max.
Operating temperature	5°C to 40°C
Storage temperature	–40°C to +55°C
Humidity	25% to 80% (No condensation)
Weight	49 kg
Dimensions (w/h/d)	424 × 331 × 621 mm, including projecting parts
Recording format	UNIHI
Tracks/channels	Video ..... 2 Digital audio ..... 2 (6 tracks/field) Analog audio (cue) ..... 1 Time code ..... 1 CTL (control) 1
Tape speed	119.7 mm/sec.
Writing speed (relative speed)	21.37 m/sec.
Recording time	63 minutes max.
Servo lock time	2 sec. max. (from STANDBY ON mode to frame capstan servo locking)
Tape timer accuracy	± 2 frames (with continuous CTL signal)
Audio error correction	Detection and correction using reed solomon code
Fast forward/rewind time	150 sec. max.
Cassette type	1/2-inch metal-coated UNIHI videocassette tape (thickness: 13.5 ± 0.5 µm)

Video

Video bandwidth	Y: 0 to 20 MHz, –1 to –6 dB P_B, P_R: 0 to 7 MHz, –4 to –9 dB (line sequential)
S/N ratio	Y: 40 dB P_B, P_R: 46 dB (non-linear emphasis on)
K factor	5 max. (2T pulse)
Tilt	3% max. (horizontal and vertical)
Linearity	5% max. (at low frequency)
Channel delay time	±15 nsec. max.
Input/output return loss	20 dB min.
Input level variable range	0.7 ± 0.1 V
Output level variable range	0.7 ± 0.1 V Sync phase: +0.6 to –0.3 µsec.

Digital audio (Channels DA-1 to DA-4)

Sampling frequency	48 kHz (synchronized to video)
Quantization	16 bits/sampling
Frequency response	20 Hz to 20 kHz $^{+0.5}_{-1.0}$ dB (at 1 kHz, 4 dBm nominal)
Dynamic range	90 dB min. (at 1 kHz, emphasis on)
Distortion	0.05% max. (at 1 kHz, emphasis on, 0 VU headroom 18 dB)
Wow & flutter	Less than measurable
Crosstalk	–80 dB max. (between channels, at 1kHz)
Phase skew between channels	Less than 10° (at 15 kHz)
Emphasis	T_1 = 50 µs/T_2 = 15 µs (ON/OFF switchable)
Level (analog XLR)	Input: –16 dBm to +10 dBm (4 dBm nominal, 600 ohm/10k ohm impedance, balanced) Output: 4 dBm, 600 ohm impedance, balanced
Headroom	18 dB
Delay (output)	± 0.5 frame, variable (relative to video signal)

Analog cue audio (cue track)

Frequency response	100 Hz to 10 kHz ± 2 dB
S/N ratio	50 dB min. (at 3% distortion)
Distortion	1.5% max. (0 VU headroom 12 dB)
Wow & flutter	0.2% max. (0.5 to 200 Hz, NAB, unweighted)
Level	Line input: –16 dBm to +10 dBm (600 ohm/10k ohm impedance, balanced) Microphone input: –60 dBs, balanced Output: 4 dBm, 600 ohm impedance, balanced

Input/output signal

Video input/output

Analog (BNC)	G/B/R, Y/P_B/P_R input: 1.0 Vp-p ± 1 dB
	SYNC input: ± 0.3 V ± 1 dB
	G/B/R, Y/P_B/P_R output: 0.7 Vp-p (video), ± 0.3 V (sync)
	SYNC output: ± 0.3 V, 75 ohms, G/B/R or Y/P_B/P_R selectable
Monitor output (BNC)	Y, G/B/R, Y/P_B/P_R: 0.7 Vp-p (video), ± 0.3 V (sync)
Waveform monitor output (BNC)	G/B/R/Y/P_B/P_R: 0.7 Vp-p (video), ± 0.3 V (sync), 75 ohms
Waveform monitor trigger output (BNC)	0.3 Vp-p, 75 ohms

Audio input

Analog input	
DA-1 to DA-4 (XLR):	–16 dBm to +10 dBm, 150 ohms/600 ohms/10k ohms, balanced
CUE (XLR):	–16 dBm to +10 dBm, 600 ohms/10k ohms, balanced (Microphone input: –60 dBs)
Digital input	
DA-1/2, DA-3/4 (XLR):	AES/EBU format

Audio output

Analog output	
DA-1 to DA-4 (XLR):	+4 dBm nominal, 600 ohms, balanced
CUE (XLR):	+4 dBm nominal, 600 ohms, balanced
MONITOR L, R (XLR):	+4 dBm, 600 ohms, balanced
	L/R channels, analog audio signals selectable
HEADPHONES:	8 ohms, unbalanced, variable
Digital output	
DA-1/2, DA-3/4 (XLR):	AES/EBU format

Time code

Input/output (XLR)	SMPTE/EBU time code, 600 ohms, balanced

Remote control

REMOTE-1 (RS-232C)(D-sub 25-pin)	For RS-232C interface
REMOTE-2A IN, REMOTE-2A OUT, REMOTE-2B IN/OUT (D-sub 9-pin)	For 9-pin interface
VA CONTROL (D-sub 15-pin)	For video/audio input/output level control
REMOTE (mini jack)	For simple remote control by SIRCS (standard code for infrared contorl system)

Design and specifications are subject to change without notice.

2-2. PRINTED CIRCUIT BOARD FUNCTION

BLOCK	BOARD	CIRCUIT FUNCTION	LOCATION
HEAD DRUM	DR-90	PB Head Amplifier	DRUM (UPPER)
	DR-126	Brush Ass'y	
	DR-127	Flange Ass'y	DRUM (LOWER)
	DR-128	Stator Ass'y	
RF	DM-77A DM-77B	A CH PB Head Equalizer/ B CH PB Head Equalizer	CARD RACK ①
	MD-65	Modulator, RF Switch	
	RE-70	REC/ERASE Head Amplifier	UPPER SW REG
DIGITAL VIDEO PROCESS	IPR-1	Video A/D, TCI Converter, D/A	CARD RACK ①
	TBC-14	Video A/D Converter, Write Clock Generator	
	TBC-15	TCI Reconvert, Line TBC	
	SG-169	Video Clock Generator	
VIDEO	IV-23	Input AGC/MATRIX, Waveform	CARD RACK ②
DIGITAL AUDIO PROCESS	ADA-14	Audio A/D, D/A Converter	CARD RACK ①
	DEC-50	Audio Decoder, Error Correction	
	ENC-12	Audio Encoder, Parity Generator	CARD RACK ③
	ED-23	Audio/System/Servo Clock Generator Audio Data Bus Control & Diagnosis	
AUDIO & LONGITUDE	AE-08	CUE, TC, CTL REC/PB Amp Control & Erase Head Amplifier	CARD RACK ③
SERVO	SV-116	Servo Main	CARD RACK ③
	RM-68	Servo Sub Control, Sensor Interface	UNDER TAPE TRANSPORT
SYSTEM CONTROL	SY-144	System Control	CARD RACK ③
	IF-241	Remote-1/2A/2B/VA Control	REAR PANEL
LEVEL CONTROL	VR-91	Video Level Control	FRONT PANEL
	VR-92 VR-92A	Audio REC Volume/Audio PB Volume	
	DP-105	Audio Level Meter	
	SW-352	Audio Monitor Selector	
FUNCTION CONTROL	KY-189	Main Key	CONTROL PANEL
	KC-14	Key Control	
	DP-106	Sub Key	
	EN-55	Entry Key	
	DET-3	Search Dial Detector	

BLOCK	BOARD	CIRCUIT FUNCTION	LOCATION
CONNECTOR PANEL	IO-43	Video/Sync Input Buffer	REAR PANEL
	IO-44	Video/Sync Output Buffer	
	IO-53	Character Mix, Video Monitor Output	
	IO-45 IO-45A	Audio Analog IN/OUT Audio Monitor R Out	
	IO-46 IO-46A	Audio Digital, TC, CUE IN/OUT, Monitor L Out	
	VR-93	Headphone/Remote Jack	SW PANEL
POWER	PS-187	Rectifier	RIGHT SIDE
	PC-56	+5V(D), +5V(A), +15V Switching Regulator	
	PC-57	–5V(D), +12V, –12V Switching Regulator	
	AC-100	AC Line Filter	
	PS-190	Power Switch	SW PANEL
MOTHER	MB-247	Main Mother	CARD RACK ①, ②
	SMB-7	Sub Mother	CARD RACK ③
	SMB-8	Connector Panel Mother	REAR PANEL
FRAME WIRING	TAPE TRANSPORT		
	SW-435	Cassette Compartment Switch	TAPE TRANSPORT
	TR-58	Tension Sensor	
	PC-17	Unthread End Detector	
	SE-117	Tape (END/TOP) Sensor Radiation	
	PD-35	Press Pinch	
	CASSETTE COMPARTMENT		
	CL-21	Cassette Compartment Connection	CASSETTE COMPARTMENT
	LMP-5	Cassette Compartment Illumination	
	PC-17	Cassettee IN DOWN/UP Sensor	
	TE-2	Tape END/TOP Sensor	
	LEVEL/REMOTE CONTROL		FRONT/REAR
	FUNCTION CONTROL PANEL		FRONT
	CONNECTOR PANEL		REAR/SW PANEL
	POWER SUPPLY		RIGHT SIDE
EXTENSION	EX-211	For Card Rack ①	PACKING
	EX-212	For Card Rack ②	
		For Card Rack ③	

2-3. LOCATION OF MAIN PARTS

2-3-1. Location of Card Rack ① to ③

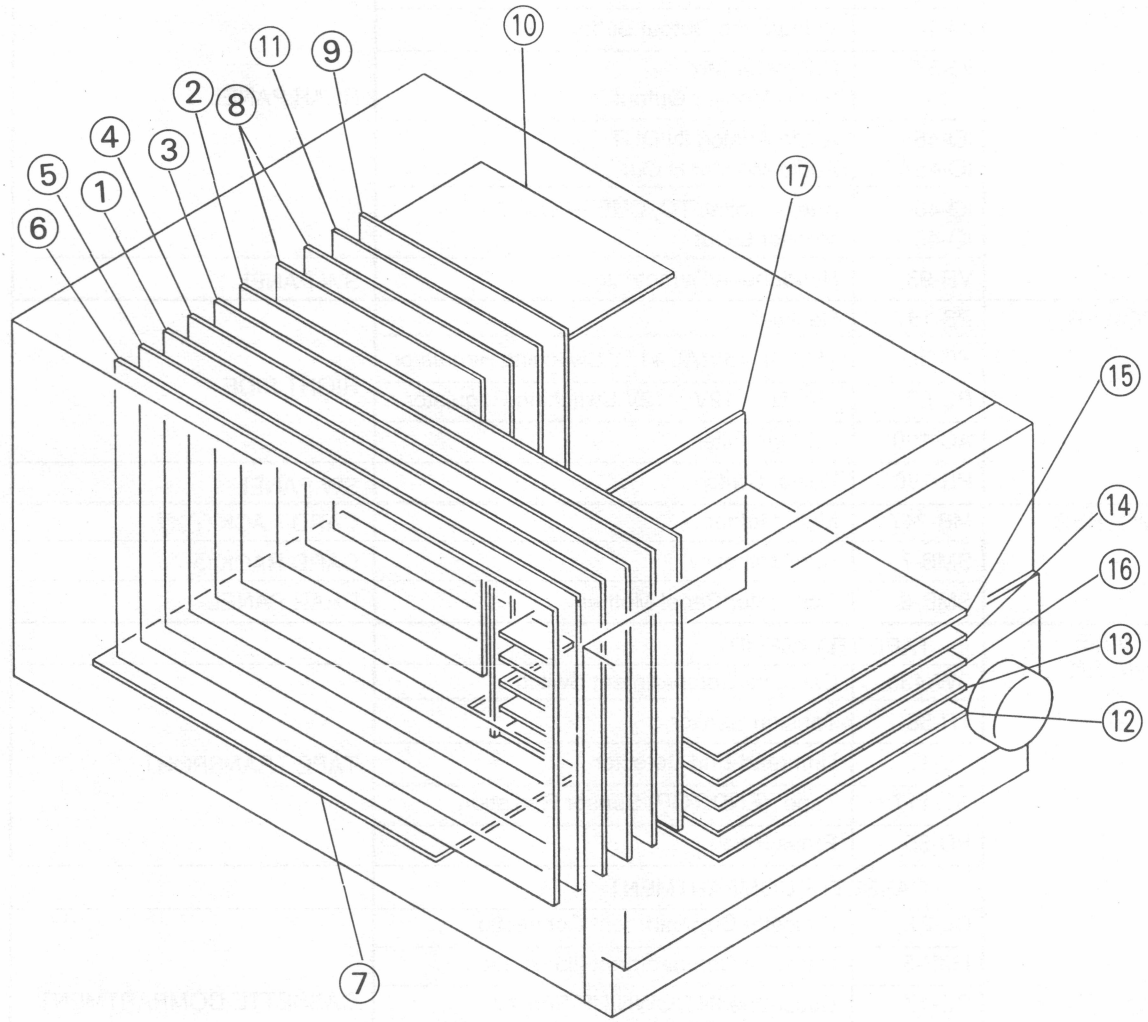

CARD RACK-①
1. IPR-1 Board: Video A/D, TCI Converter, D/A
2. TBC-14 Board: Video A/D Converter, Write Clock Generator
3. TBC-15 Board: TCI Reconvert, Line TBC
4. SG-169 Board: Video Clock Generator
5. ADA-14 Board: Audio A/D, D/A Converter
6. DEC-50 Board: Audio Decoder, Error Correction
7. MB-247 Board: Main Mother

CARD RACK-②
8. DM-77A/77B Board: A CH PB Head Equalizer/ B CH PB Head Equalizer
9. MD-65 Board: Modulator, RF Switch
10. RE-70 Board: REC/ERASE Head Amplifier
11. IV-23 Board: Input AGC/Matrix, Waveform
7. MB-247 Board: Main Mother

CARD RACK-③
12. ENC-12 Board: Audio Decoder, Parity Generator
13. ED-23 Board: Audio/System/Servo Clock Generator Audio Data Bus Control & Diagnosis
14. AE-08 Board: CUE, TC, CTL REC/PB Amplifier Control & Erase Head Amplifier
15. SV-116 Board: Servo Main
16. SY-144 Board: System Control
17. SMB-7 Board: Sub Mother

2-3-2. Location of Front Panel/Function Control Panel/Switch Panel

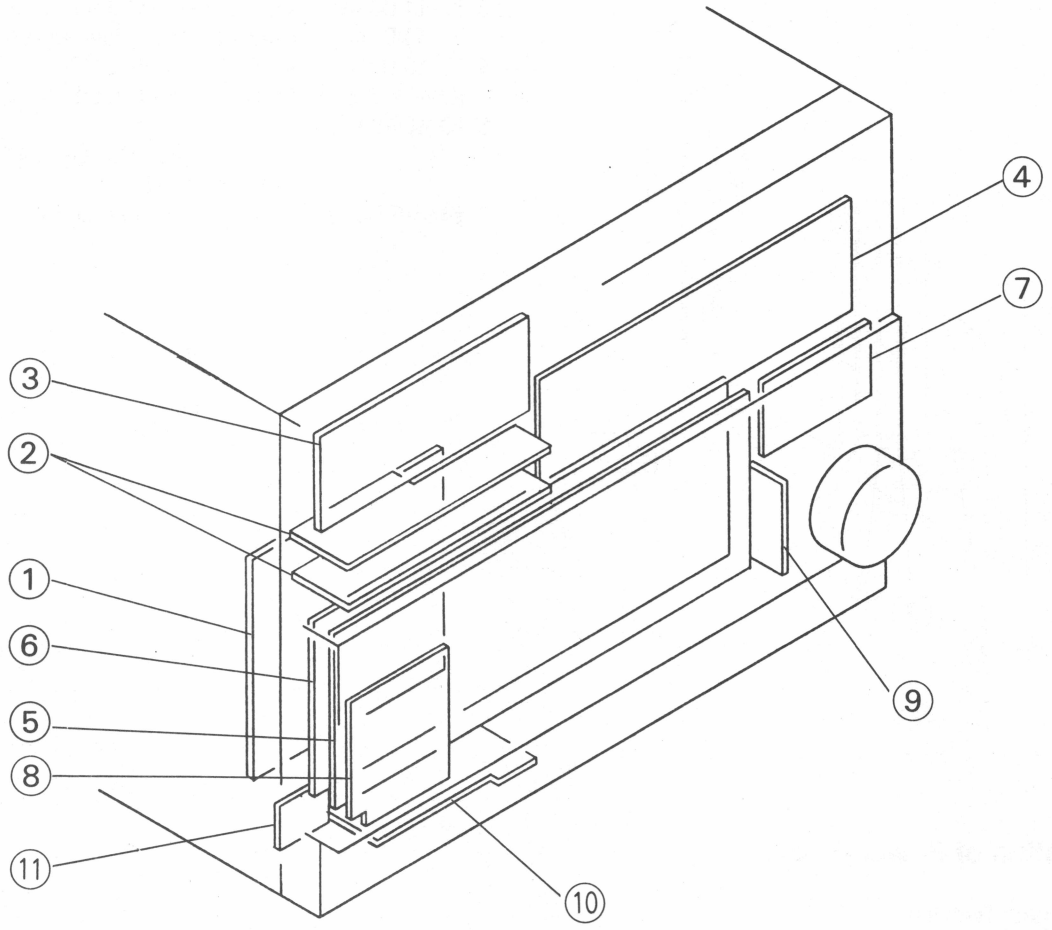

FRONT PANEL
1. VR-91 Board: Video Level Control
2. VR-92/92A Board:
   Audio REC Volume/Audio PB Volume
3. DP-105 Board: Audio Level Meter
4. SW-352 Board: Audio Monitor Selector

FUNCTION CONTORL PANEL
5. KY-189 Board: Main Key
6. KC-14 Board: Key Controller
7. DP-106 Board: Sub Key
8. EN-55 Board: Entry Key
9. DET-3 Board: Search Dial Detector

SWITCH PANEL
10. VR-93 Board: Headphone/Remote Jack
11. PS-190 Board: Power Switch

2-3-3. Location of Rear Panel

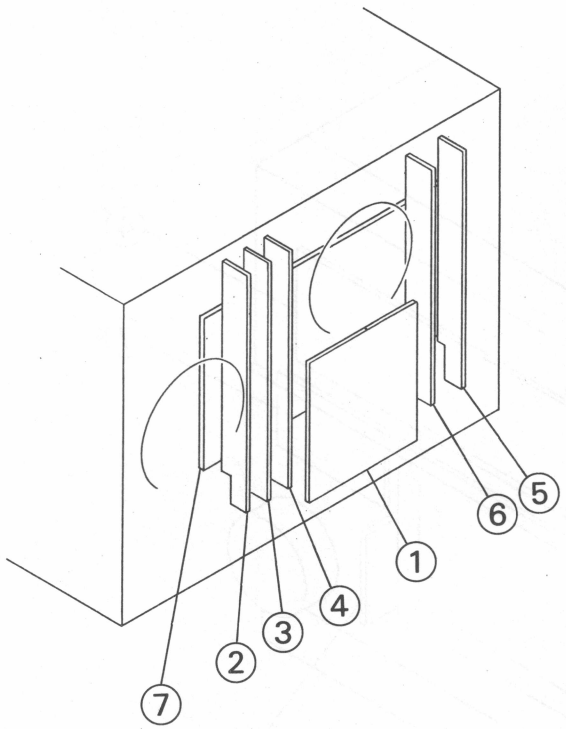

1. IF-241 Board: Remote-1/2A/2B/VA Controller
2. IO-43 Board: VIDEO/SYNC Input Buffer
3. IO-44 Board: VIDEO/SYNC Output Buffer
4. IO-53 Board: Character Mix, Video Monitor Out
5. IO-45 Board: Audio Analog IN/OUT
   IO-45A Board: Audio Monitor R OUT
6. IO-46/46A Board:
   Audio Digital, TC, CUE, IN/OUT, Monitor L OUT
7. SMB-8 Board: Connector Panel Monther

2-3-4. Location of Power Block

1. PS-187 Board: Rectifier
2. PC-56 Board: +5V(D), +5V(A), +15V Switching Regulator
3. PC-57 Board: –5V, +12V, –12V Switching Regulator
4. AC-100 Board: AC Line Filter

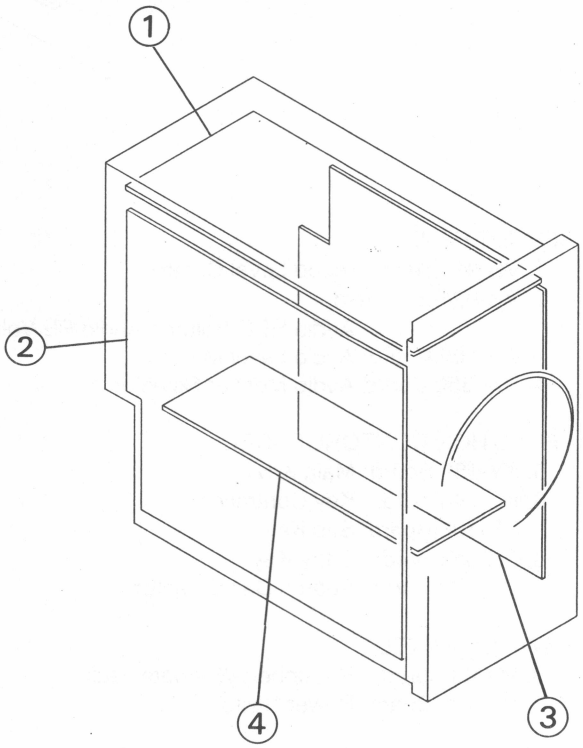

2-3-5. Location of Fan Motor

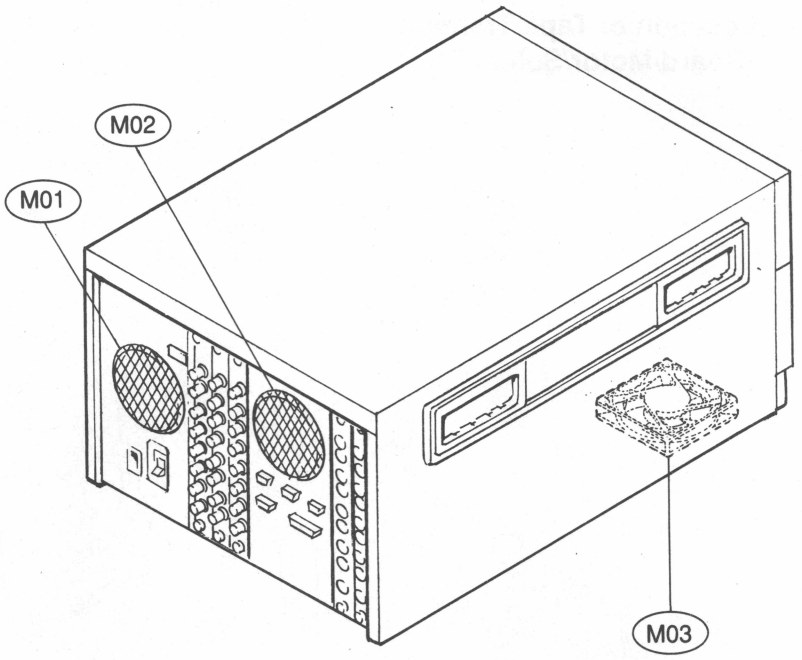

M01: Power Supply Fan Motor (Exhaust Fan)
M02: Rear Fan Motor (Exhaust Fan)
M03: Bottom Fan Motor (Intake Fan)

2-3-6. Location of Cassette Compartment

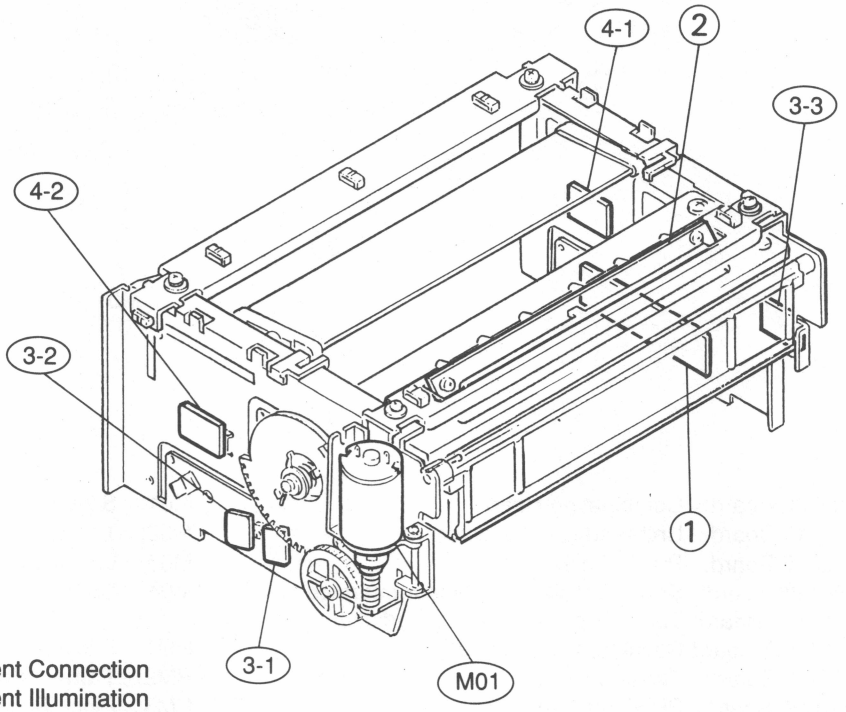

1. CL-21 Board: Cassette Compartment Connection
2. LMP-5 Board: Cassette Compartment Illumination
3-1. PC-17 Board: Cassete In Sensor
3-2. PC-17 Board: Cassette Down Sensor
3-3. PC-17 Board: Cassette Up Sensor
4-1. TE-2 Board: Tape Top Sensor
4-2. TE-2 Board: Tape End Sensor

M01: Cassette Compartment Drive Motor

2-3-7. Location of Tape Transport-1 (Board/Motor/Solenoid)

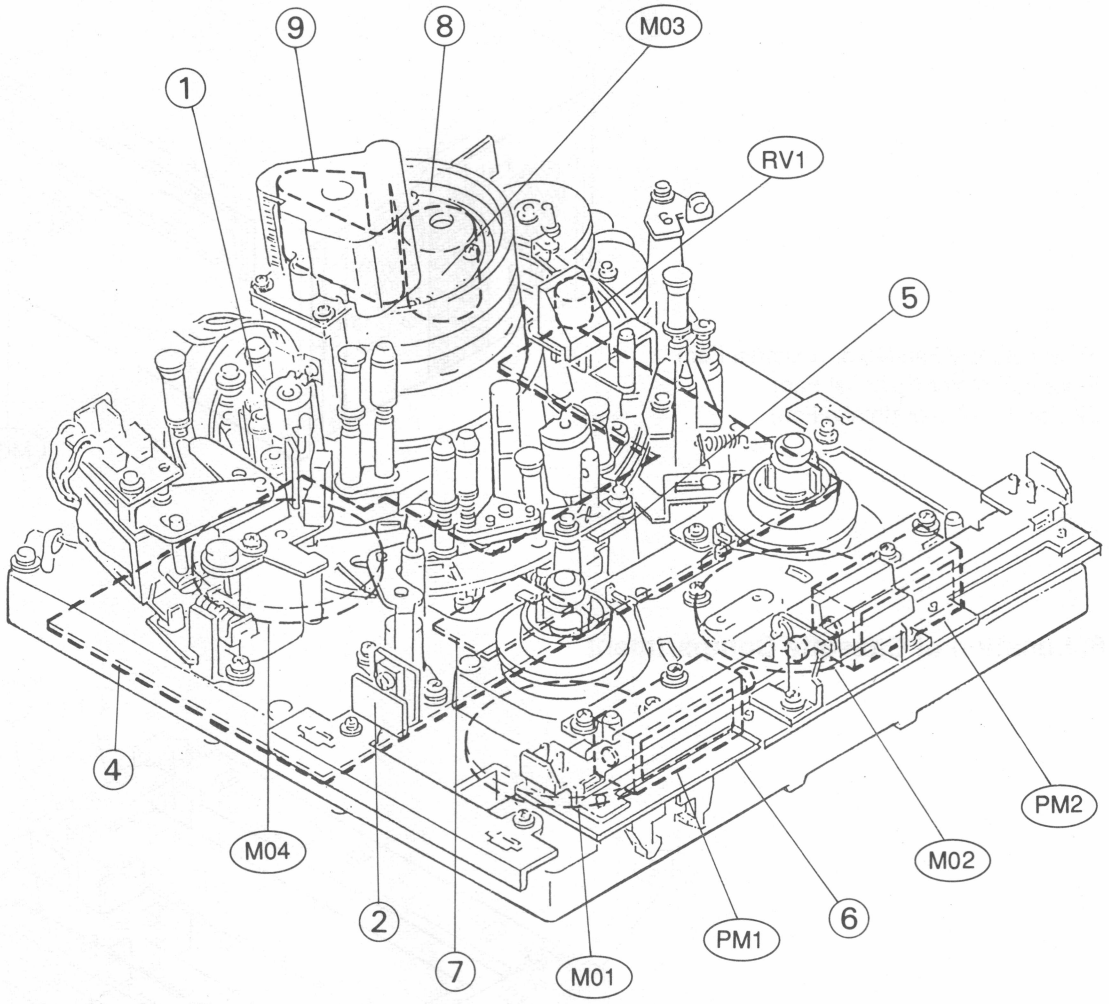

1. AH-22 Board: Combination Head
2. PC-17 Board: Unthread End Detector
3. PD-35 Board: Press Pinch
4. RM-68 Board: Servo Sub Control/Sensor Interface
5. SE-117 Board: Tape (Top/End) Sensor Radiation
6. SW-435 Board: Cassette Compartment Switch
7. TR-58 Board: Tension Sensor
8. DR-90 Board: PB Head Amplifier
9. DR-126 Board: Brush Ass'y
   DR-127 Board: Flange Ass'y (inside of Drum Ass'y)
   DR-128 Board: Stator Ass'y (inside of Drum Ass'y)

M01: S Reel Motor
M02: T Ree Motor
M03: Loading Motor
M04: Capstan Motor

PM1: S Brake Solenoid
PM2: T Brake Solenoid
PM3: Pinch Roller Solenoid

RV1: Threading Potentiometer

2-3-8. Location of Tape Transport-2 (Drum/Stationary Head/Tape Guide Block)

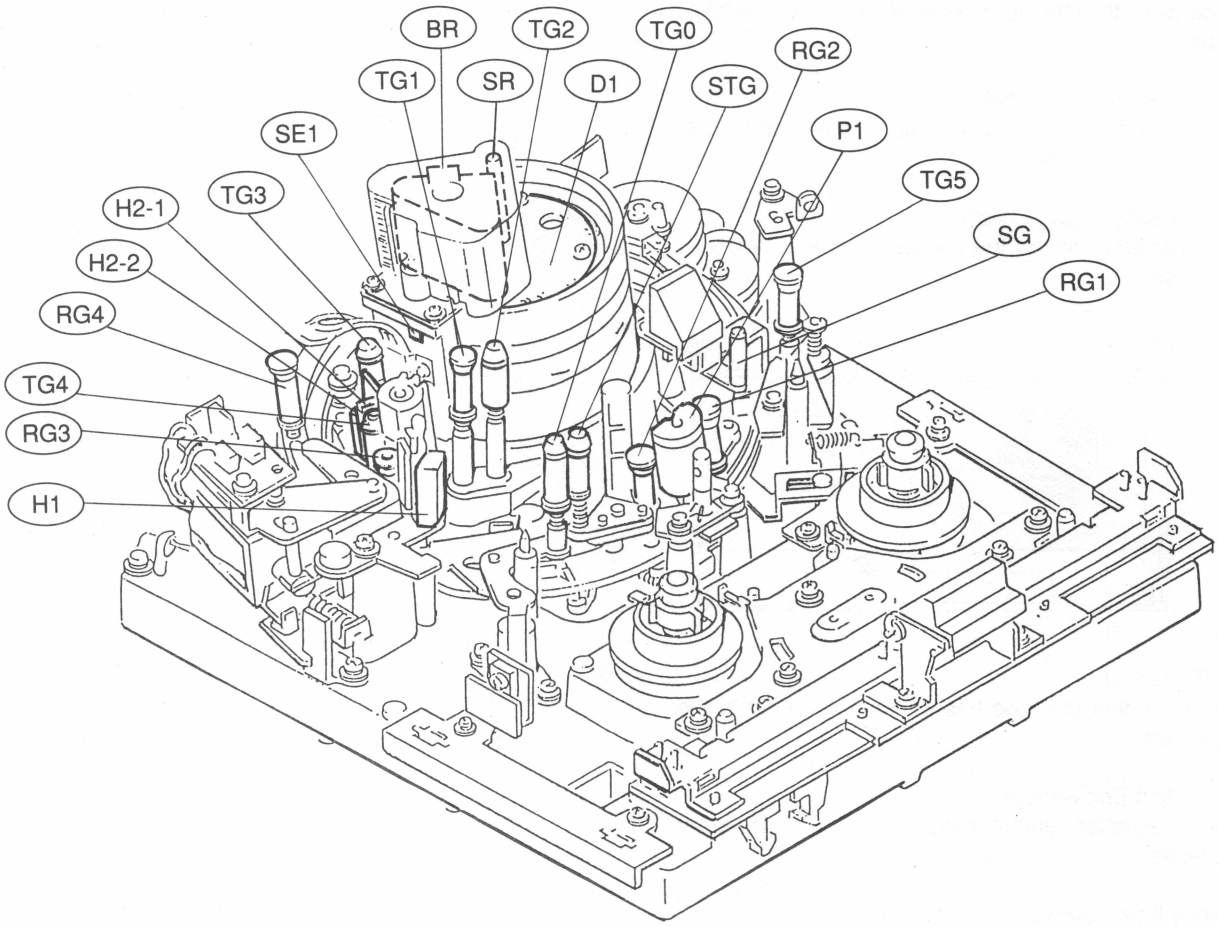

BR: Brush Ass'y

D1: Drum Ass'y

H1: Full Erase Head
H2-1: Combination Head (Channel Erase Head)
H2-2: Combination Head (T/C, CTL, CUE REC/PB Head)

P1 : Pinch Roller

RG1: Ring Guide 1
RG2: Ring Guide 2
RG3: Ring Guide 3
RG4: Ring Guide 4

SE1: Dew Sensor
SG: Slant Guide
SR: Slip Ring
STG: S Tension Regulator Guide

TG0: Tape Guide 0
TG1: Tape Guide 1
TG2: Tape Guide 2
TG3: Tape Guide 3
TG4: Tape Guide 4
TG5: Tape Guide 5

2-4. EXPLANATION OF SENSOR FUNCTIONS

1. Dew Sensor
   Detects condensation in TTP block.

2. End (S) Sensor
   Detects when the tape has all been wound up on the take-up side.

3. Cassette Sensor (A) (1 bit)
   Detects whether or not the inserted cassette is in total recording lockout mode.

   Cassette Sensor (B) (2 bits)
   Detects whether or not the inserted cassette is UNIHI format tape.

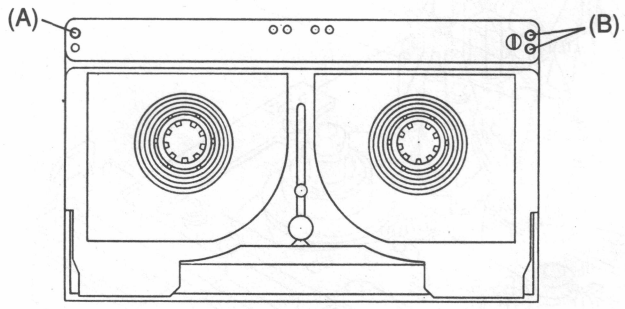

4. End (T) Sensor
   Detects whether the tape has all been rewound to the supply side.

5. Unthreading End Sensor
   Detects whether unthreading operation has been completed.

6. Cassette Down Sensor
   Detects whether the cassette has been inserted and the cassette compartment has moved down to the correct position.

7. Cassette Up Sensor
   Detects whether the cassette compartment has moved up to the correct position during eject operation.

8. Cassette In Sensor
   Detects whether the cassette has been inserted to the correct position.

2-5. REMOVAL OF CABINET

2-5-1. Removal of Top Panel, Side Panels, Front Panel, Function Control Panel, Rear Panel and Bottom Panel

REAR PANEL

1. Remove four screws (B4x6).
2. Remove CN630 and CN637 on IF-241 board, and function control panel cabel (8 pin).
3. Remove the rear panel.

TOP PLATE

1. Loosen four screws.
2. Remove top panel at the direction of the arrow.

RIGHT SIDE PANEL

Remove eight screws (B4x6) and remove the right side panel.

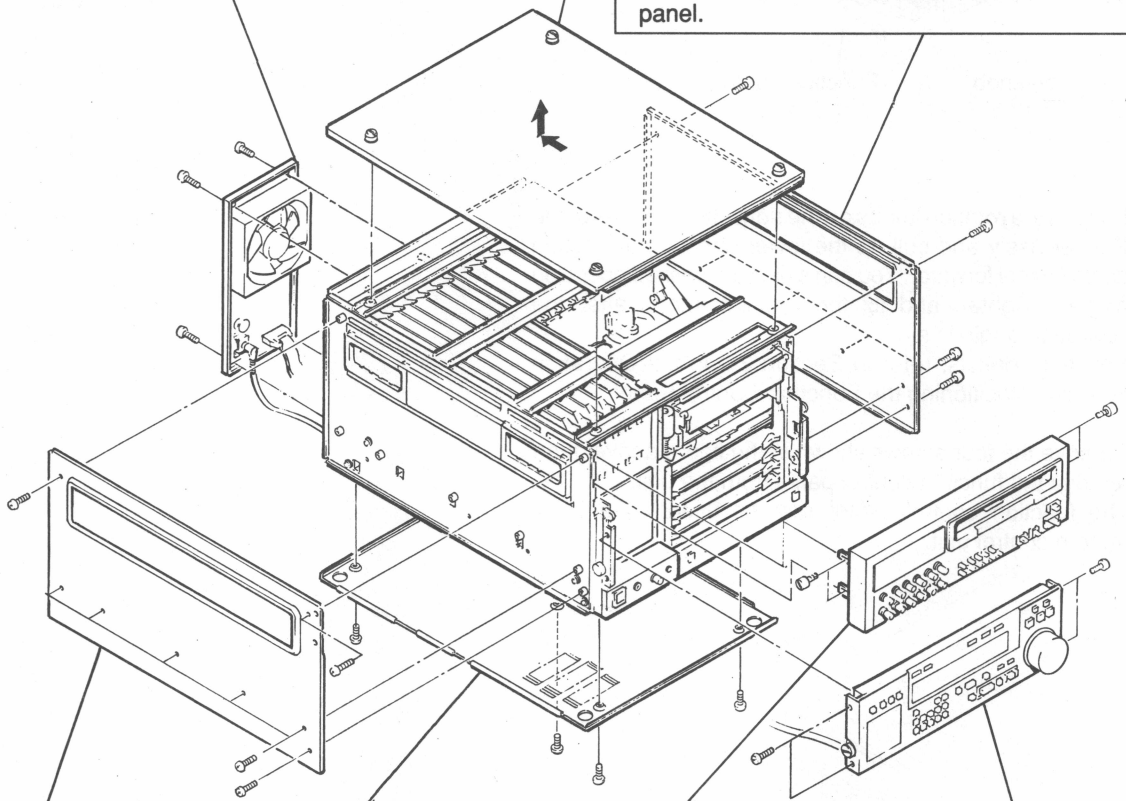

BOTTOM PLATE

Remove five screws (B3×6) and remove the bottom panel.

FRONT PANEL

Remove four screws (FR PNL) and remove the front panel.

LEFT SIDE PANEL

Remove eight screws (B4x6) and remove the left side panel.

FUNCTION CONTROL PANEL

Remove four screws (B3×6) and remove the function control panel.

2-5-2. Opening and Closing of Function Control Panel and Remote Control Operation

1. Four operating angles (0°, 15°, 45°, 90°) can be selected for the function control panel.

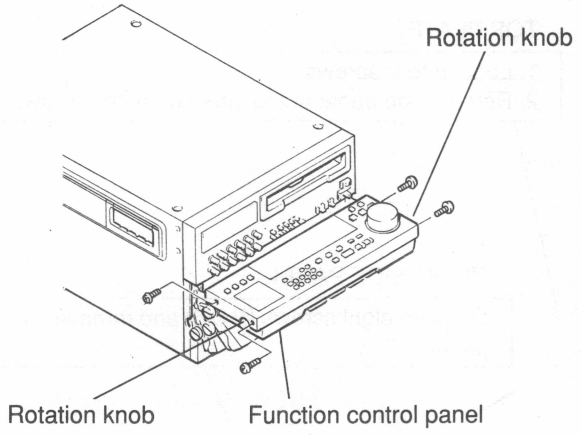

Loosen the rotation knobs on the right and left sides of the F lever ass'y and pull up the lower part of the function control panel forward. You can select the desired operation angle. Tighten and fix the rotation knobs after the operation angle is set.
For more details, refer to Section 2-4 in the Operation Manual, "Positioning the Function Control Panel."

2. Remove the four screws shown in the figure above, then remove the funciton control panel from the unit.
The function control panel can be used as a wired remote control unit.

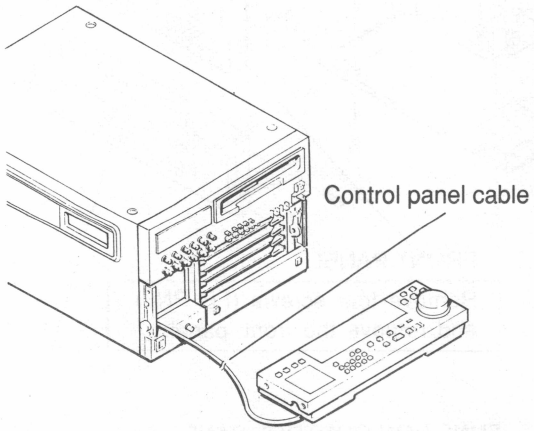

The control panel cable (8-pin) can be extended to 10m using an optional cable in addition to a packed cable (2m). For the part number, refer to Section 1-7-1 "Matching Connectors and Cables."

Control Panel Cable (8-pin) Setting

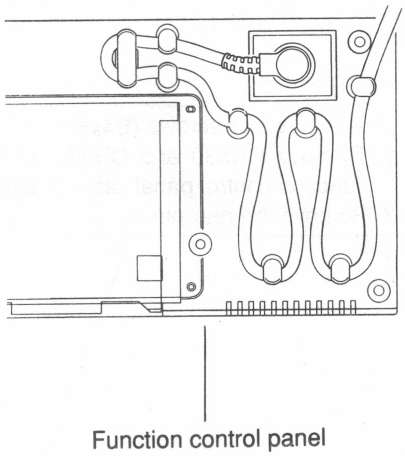

2-6. REMOVAL OF FUNCTION CONTROL PANEL COMPONENTS

Remove the components inside of the function control panel in accordance with the procedure below.

Function Control Panel Removal

1. Pull out the 8-pin connector from the back cover in the direction of arrow A.

2. Remove five of screw ① (PSW3×30) and two of screw ② (PSW3×10), then remove the back cover.

3. Remove KC-14 board.
   KC-14 board connects a signal to KY-189 board and fixes the board using pin connectors (one 40-pin connector and two 60-pin connectors).

KC-14 Board Removal

Remove KC-14 board by pushing down its shaded portion in the direction of arrow B so that each pin connector is opened equally.

NOTE: A considerable force is required when the shaded portion is pushed down.
This also gives a burden to the pin connector portion. Be careful not to bend the pins. For the removal of KY-189, EN-55, DP-106 and DET-3 boards and other components, refer to Section 22-2 "Exploded View."

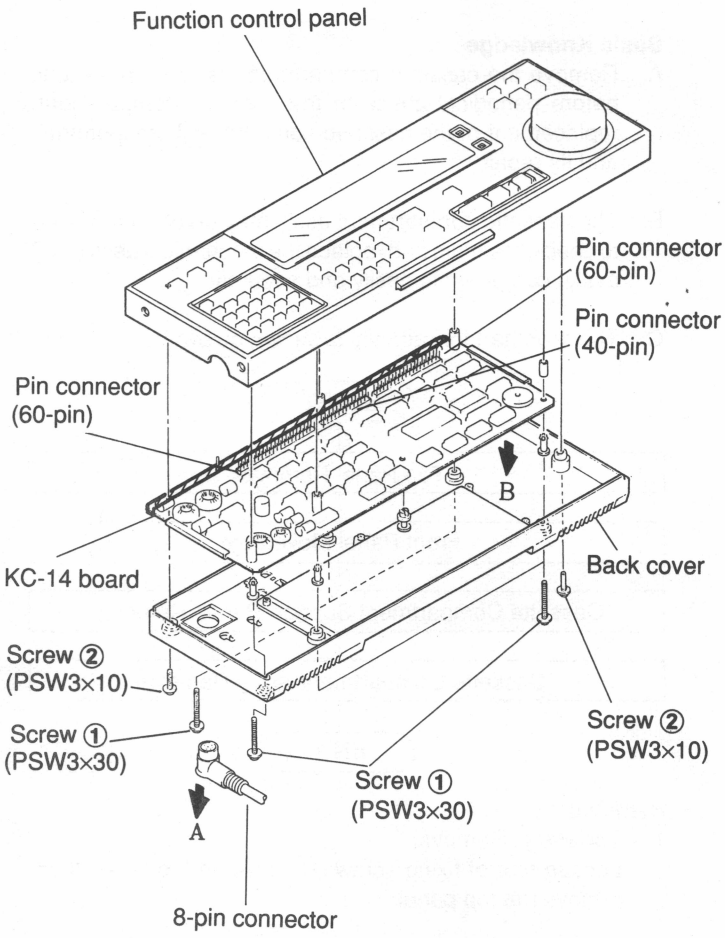

2-7. CASSETTE COMPARTMENT ASS'Y

2-7-1. Removal of Cassette Compartment

Basic Knowledge

A. Remove the cassette compartment ass'y from the unit before periodical check of the cassette compartment, replacement of the cassette compartment components, and its repair.

B. The cassette compartment ass'y may be often removed to check, maintain and replace the mechanical deck (TTP ass'y) components easily and securely.

C. The flowchart for removal is shown below.

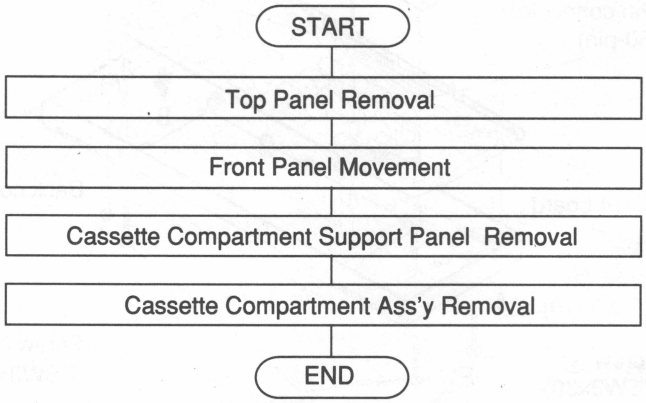

Removal

1. Top Panel Removal
   Loosen four of fixing screw ① shown in Fig.2-7-1, then remove the top panel.

2. Front Panel Movement
   Loosen four of screw ③ on the side panels of the unit and pull out the front panel forward.

3. Cassette Compartment Support Panel Removal
   Remove six of screw ② shown in Fig.2-7-1, then remove the cassette compartment support panel.

4. Cassette Compartment Ass'y Removal
   As shown in Fig.2-7-1, pull out the internal connection connector (CN395) while pulling up the cassette compartment ass'y from the unit. Then, remove the cassette compartment ass'y.
   Install the cassette compartment ass'y in the reverse procedure of steps 1 to 3 above.

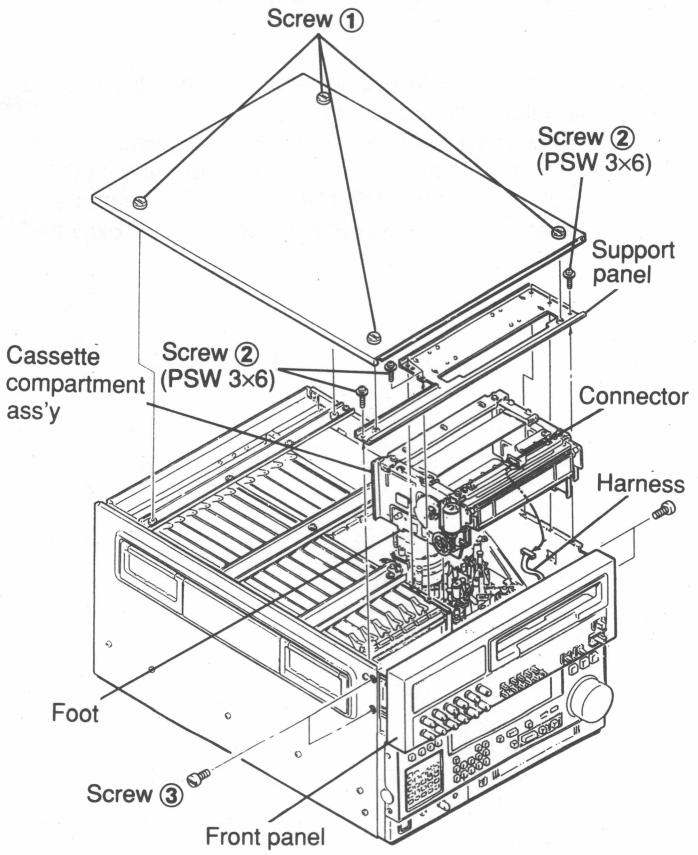

Fig.2-7-1 Removal of Casette Comparatment Ass'y

2-7-2. Manual Operation of Cassett Compartment

Basic Knowledge

A. Perform this manual operation for the operation check and cleaning during periodical check or maintenance of the cassette compartment.

B. The cassette compartment drive mechanism is shown in Fig.2-7-2.
The drive motor (DC motor) is used as a motive power source, and the cassette compartment section is driven to the cassette up/down position using a gear.

C. The drive motor is installed based on a floating system. The engagement of a worm gear and intermediate gear is released when the release lever shown in Fig.2-7-2 is pulled in the direction of arrow A.
After that, the compartment section can be set to the cassette-up/down position by shifting the pull-up lever in the directions of arrows B and C as shown in Fig. 2-7-3.

Cassette-up (Eject) Position Setting

Shift the pull-up lever in the direction of arrow C while pulling the release lever shown in Fig.2-7-3 in the direction of arrow A.

Cassette-down Position Setting

Shift the pull-up lever in the direction of arrow B while pulling the release lever shown in Fig.2-7-3 in the direction of arrow A.

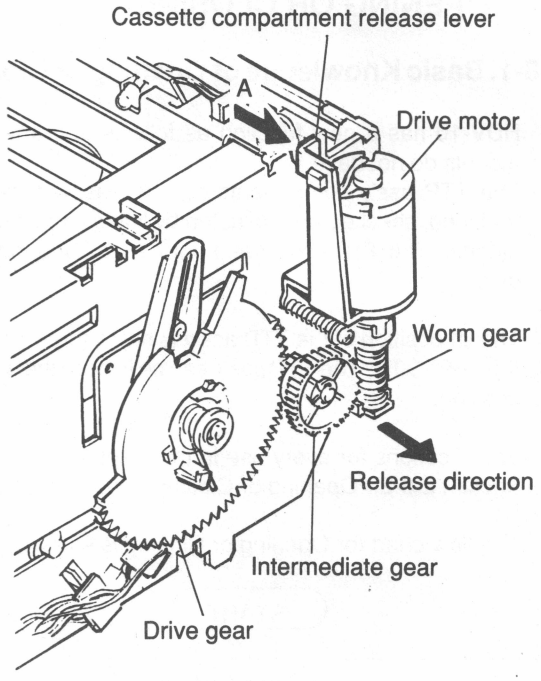

Fig.2-7-2 Cassette Compartment Drive Mechanism

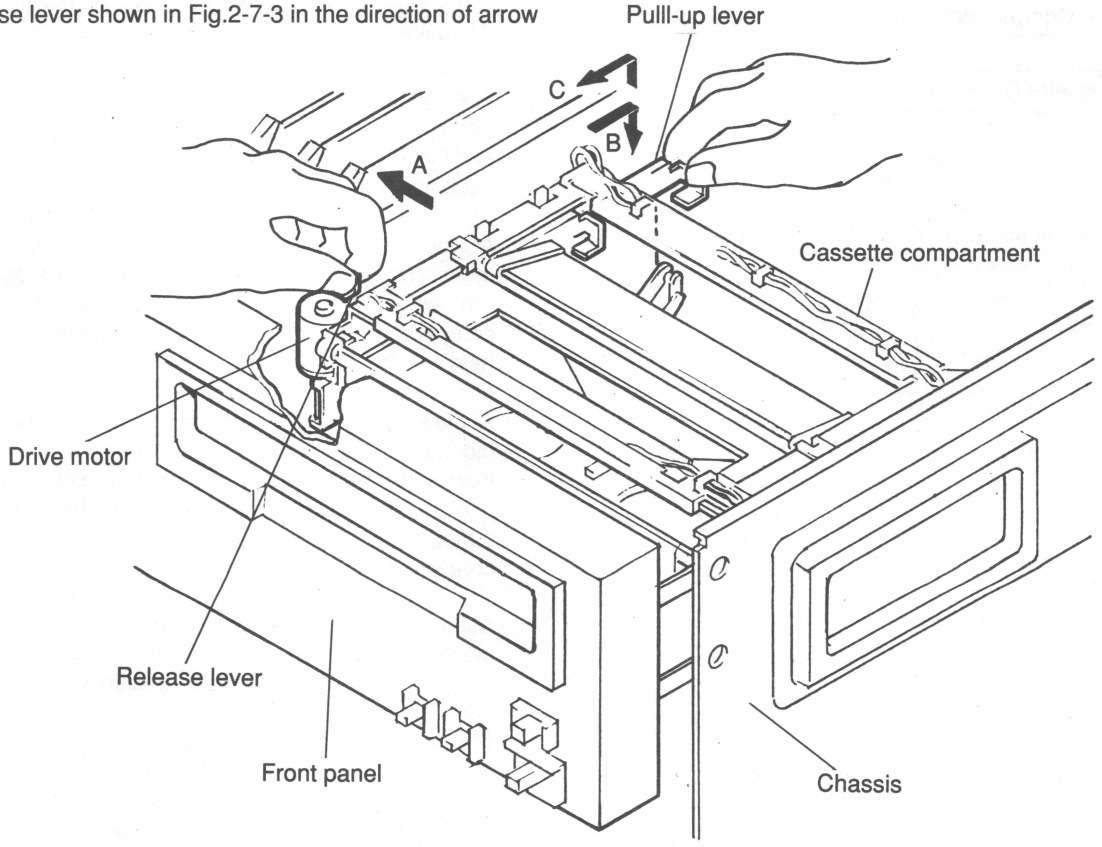

Fig.2-7-3 Cassette-up/down Position Setting

2-8. MECHANICAL DECK (TTP ASS'Y) OPENING OR CLOSING

2-8-1. Basic Knowledge of Opening or Closing

A. HDV-10 has a new function as follows that any other models do not have.
The TTP ass'y components can be easily inspected, replaced, checked and adjusted by lifting it upward with hinges. The TTP ass'y need not be removed from the unit.

B. The lift position of the TTP ass'y is set to three degrees (30°, 60°, 90°). The TTP ass'y can be fixed in the desired position.

C. Specifications for every use in the steps are explain in Section 2-8-2, "Opening or Closing (step 6)."

D. The flow chart for Opening or Closing is shown below.

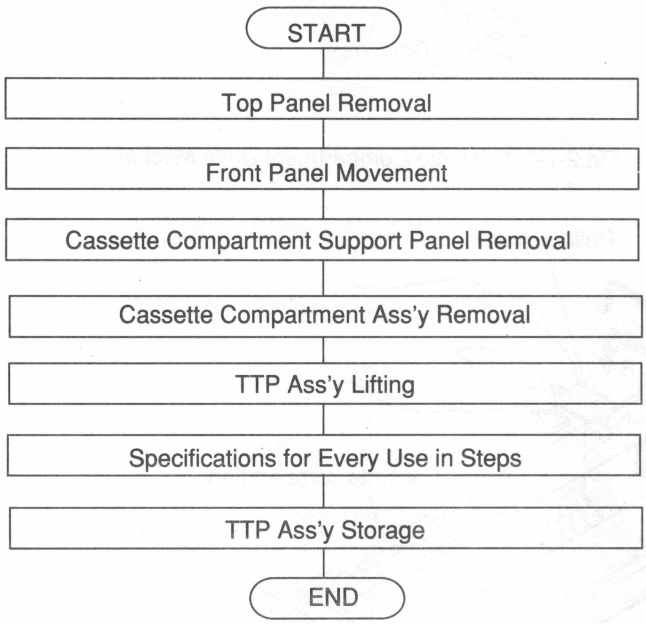

2-8-2. Opening or Closing

1. Top Panel Removal
Loosen four of screw ① shown in Fig.2-8-1 and remove the top panel.

2. Front Panel Movement
Remove four of screw ③ on the side panels of the unit and pull out and remove the front panel forward.

3. Cassette Compartment Support Panel Removal
Remove six of screw ② shown in Flg.2-8-1, then remove the cassette compartment support panel.

4. Cassette Compartment Ass'y Removal
As shown in Fig.2-8-1, pull out an internal connector (CN395) while pulling up the cassette compartment ass'y from the unit. Then, remove the cassette compartment ass'y.

5. TTP Ass'y Lifting
   (1) Loosen two of screw ④ of the right and left hinges shown in Fig.2-8-2.
   (2) Loosen three of screw ⑤ fixing the TTP base.
   (3) As shown in Fig.2-8-3, lift the TTP ass'y to the arbitrary position. Fasten screws ④ of the right and left hinges to fix the TTP ass'y.

6. Specifications for Every Use in Steps
The lift position of the TTP ass'y is set to three degrees, and the TTP ass'y is fixed in the position corresponding to each use.

   At the first degree (30°), the TTP ass'y is set for maintenance of RM-68 board. In this step, a tape can be run with the harness connected to the cassette compartment ass'y and with the cassette compartment held with hands.

   At the second degree (60°), the drum ass'y, the reel table block system, the tape guides 1 to 4 ass'y system, the loading drive gear block, the capstan motor, RM-68 board and TR-58 board are removed or attached. In this step, a tape cannot be run. The conductive state can then be checked.

   At the final degree (90°), the TTP ass'y can be opened or closed, but is used only in a special case. Lift the TTP ass'y in accordance with the procedure below in this step.
   (1) Perform steps 1 to 4.
   (2) Lay the unit on the left and remove the righ side panel.
   (3) Pull out the power block forward.
   (4) Put your hand into the square hole on the right side panel and remove the two connetors (harnesses from the stationary head).
   (5) Lift and fix the TTP ass'y.

7. TTP Ass'y Storage
Store the TTP ass'y in the reverse procedure of steps 1 to 6. When the TTP ass'y is turned to the normal position, be careful not to damage the terminal plate or other electrcal parts because the harnesses are long.

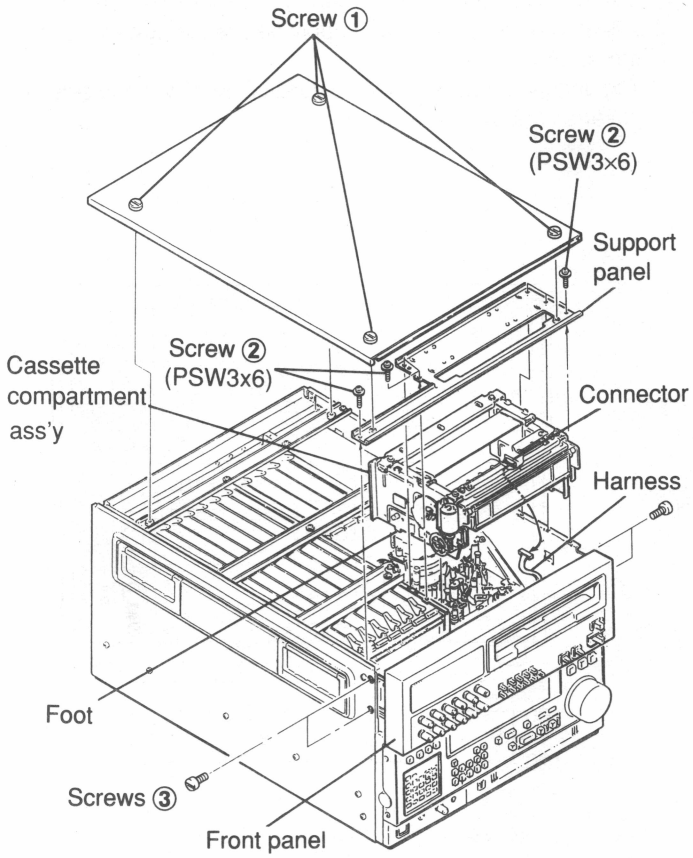

Fig.2-8-1 Cassette Compartment Ass'y Removal

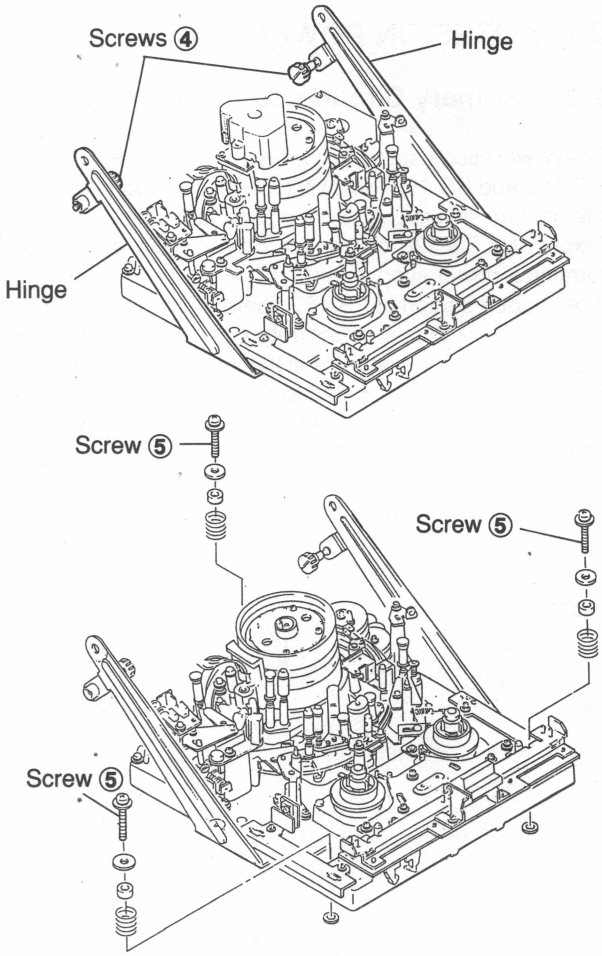

Fig.2-8-2 TTP Ass'y Lifting (1)

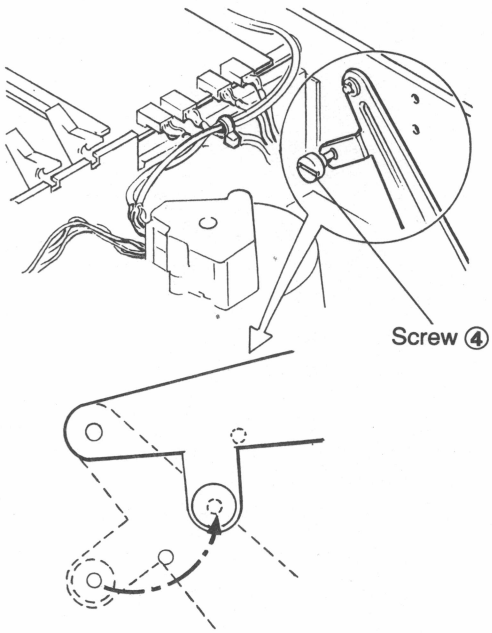

Fig.2-8-3 TTP Assy Lifting (2)

2-9. NOTES ON POWER UNIT

2-9-1. Primary Circuit and Electric Shock

The power supply section consistes of PS-187, PC-56, PC-57, AC-100 and PS-190 (on switch panel side) boards, and also the primary side circuit peripheral components. These parts (expect for PS-190 board) are contained in a single case, forming a power supply unit.
The shaded portion of PS-187 board are on the primary side circuit, and are thus at mains potential. Take care to avoid an electric shock. The heat sink in the primary side circuit on PS-187 board is also connected to the primary circuit.
Even after the power is turned OFF, a high voltage will remain on the shaded portion of the PS-187 board. The LED of PS-190 board is lighting for a while.
Therefore, be careful when handling the board.

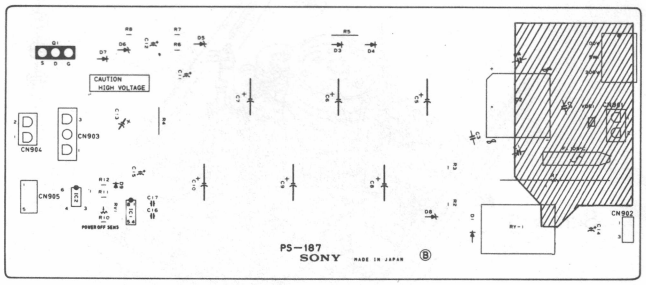

2-9-2. Notes on Voltage Selector

The voltage selector is factory set to the destination local power supply voltage. Repair parts supplied from Sony Parts Center are set to 200-240V for safety. When the power unit is replaced, check the voltage is set to 100-120V or 200-240V according to the local power supply. Be sure to set the voltage selector to the local power supply before the power switch is turned ON.
The voltage is changed by the position of the voltage selector cover as shown in the figure.

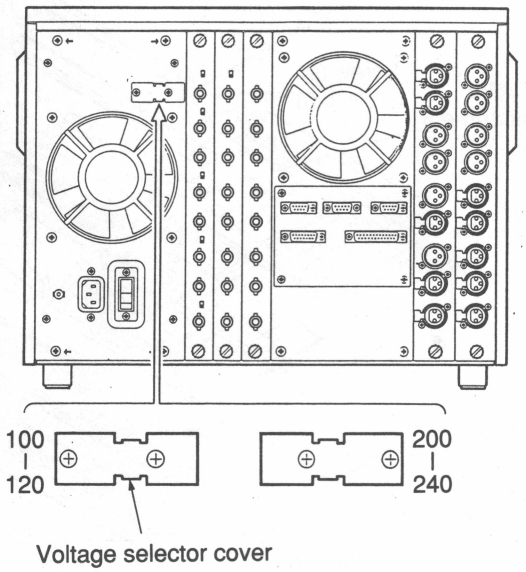

2-9-3. Removal of Power Supply

NOTE: Before performing the removal of breaker (S100), turn the power switch OFF and also pull out the power cord.

1. Remove the bottom plate.

2. Place the unit on its left side down so as to set the power unit up.

3. Remove four screws (B4×6) as shown in the figure and pull out the power unit by 5cm at the direction of the arrow.

4. Release the connector locks of CN911 on PC-56 board and CN914 on PC-57 board, remove the connectors, and then pull out the power unit at the direction of the arrow.

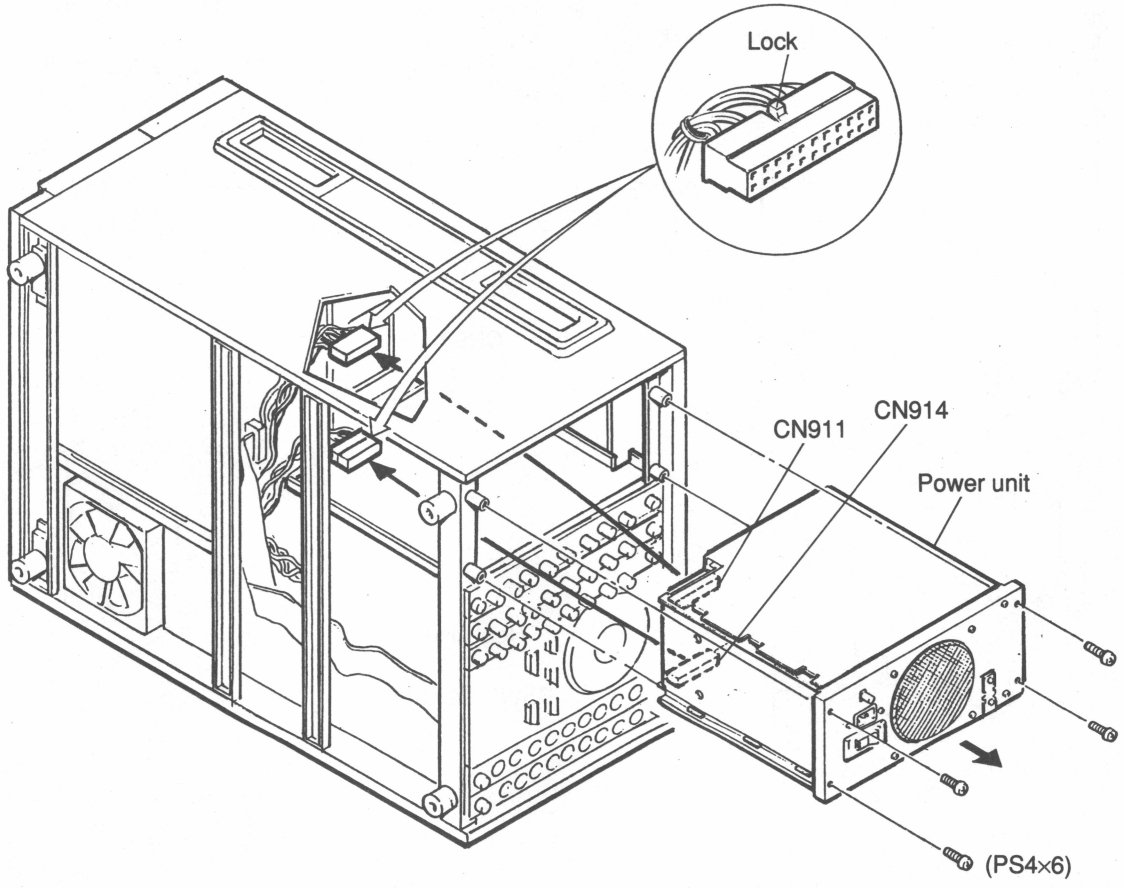

2-9-4. Removal of PS-187/PC-56/PC-57/ AC-100 Boards

NOTE: Before removing power supply, turn the power switch OFF and also remove the power cord.
Even after the power is turned OFF, a high voltage will remain on PS-187 board.
Take care to avoid an electric shock.

1. Remove six screws (PSW3x6) and take out the lid ass'y of the power unit at the direction of the arrow.
2. Remove twelve screws (PSW3x20) fixing PC-57 board.
3. Remove two screws (PSW3x6) at the bottom of power unit.
4. Remove CN912 and CN913 connectors and take out PC-57 board.

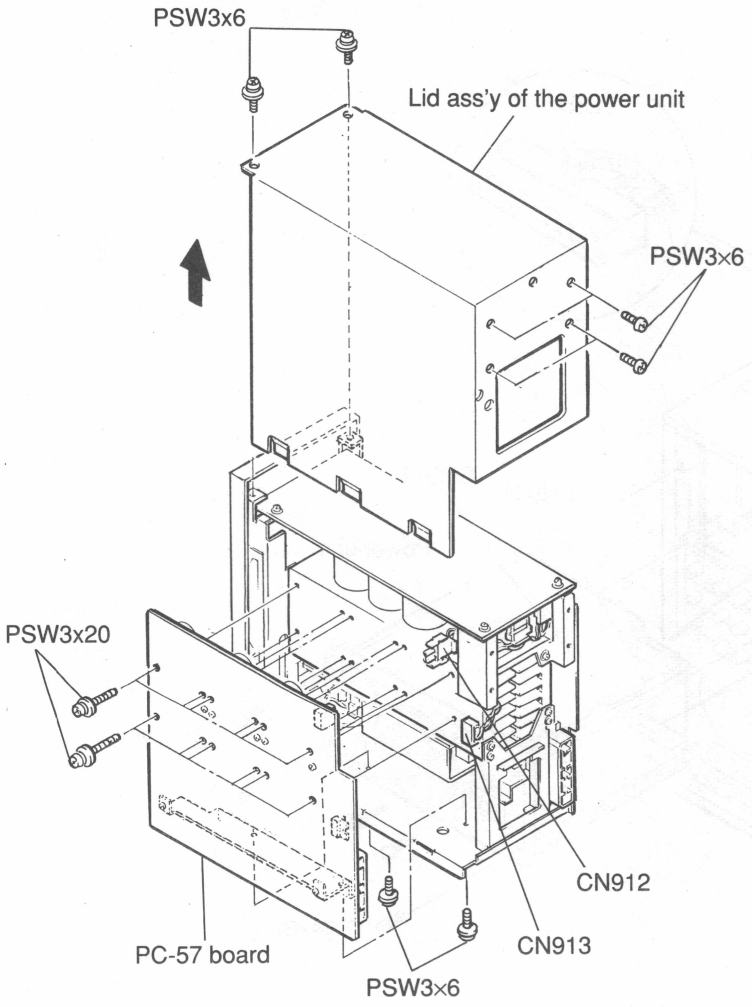

5. Remove eleven screws (PSW3x20) fixing PC-56 board.
6. Remove two screws (PSW3x6) at the bottom of the power unit.
7. Remove CN907, CN908 and CN910 connectors and take out PC-56 board.

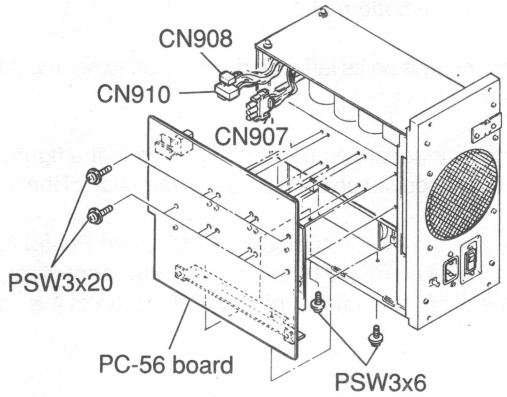

8. Remove three screws (PSW3x6) fixing PS-187 board.
9. Remove two screws (PSW3x14) fixing the heat sink of Q1.
10. Remove CN901 and CN902 connectors and take out PS-187 board.

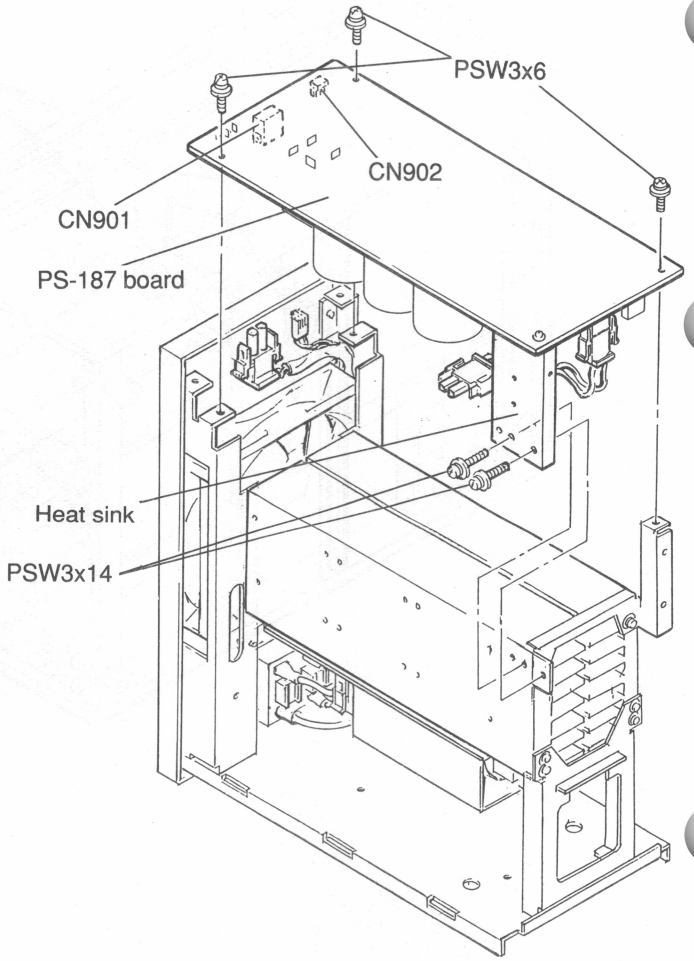

11. Remove four screws (B3×6) and a screw (PS4×6) fixing earth lag.
12. Remove CN906 and CN916 connectors, and then remove fan bracket.
13. Remove three screws (PSW3×6) and take out AC-100 board at the direction of the arrow.

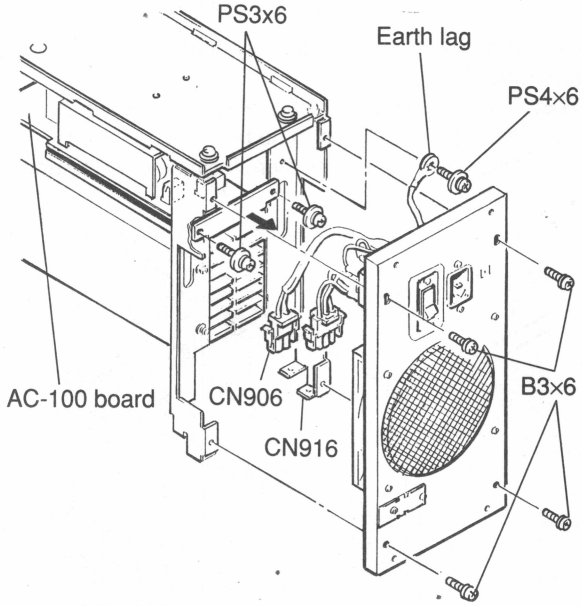

14. Remove three screws (PSW3×6) and remove the bracket from AC-100 board.

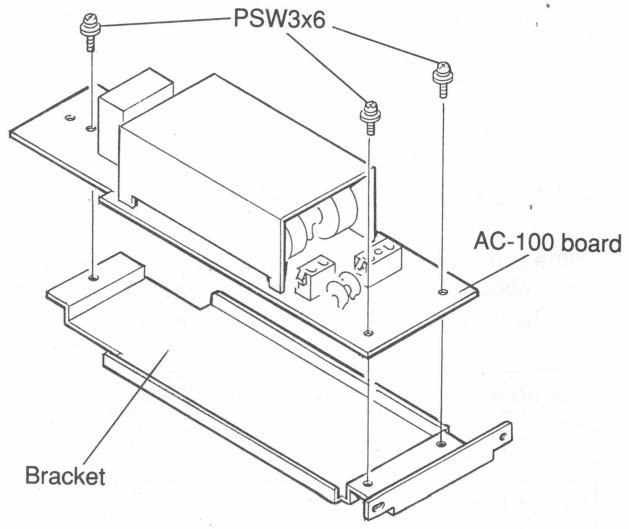

15. Install PS-187/PC-56/PC-57/AC-100 boards in the reverse procedure of steps 1 to 14 above.

2-10. REPLACEMENT PROCEDURE OF PRINTED CIRCUIT BOARDS

2-10-1. Removing/Inserting Plug-in Boards

In more than two seconds after turning the power OFF, remove or insert the plug-in board.

Removing the Board

Pull up the eject levers on the board in the direction of the arrow when pulling out the board from the connector.
Do not try to pull the board by grasping any of the components on the board.

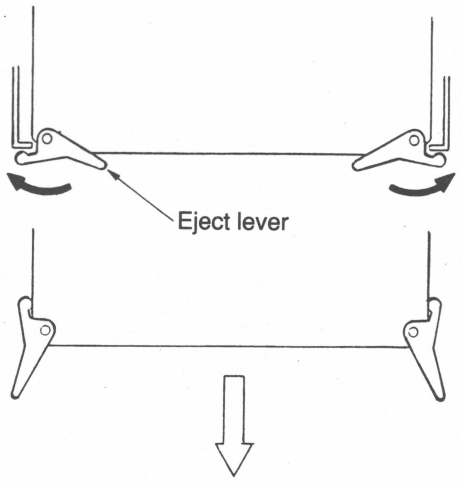

Inserting the Board

Push down the eject levers as shown in the figure and insert the board pushing the arrows' parts.

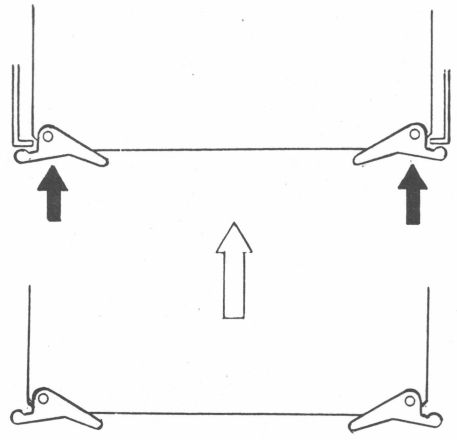

2-10-2. Replacement Procedure of Boards of Connector Panel

Loosen two face screws sufficiently, then pull out the panels to the front.
NOTE: The face screws have a design which makes it impossible for them to be removed discretely.
This design prevents them falling inside the unit.

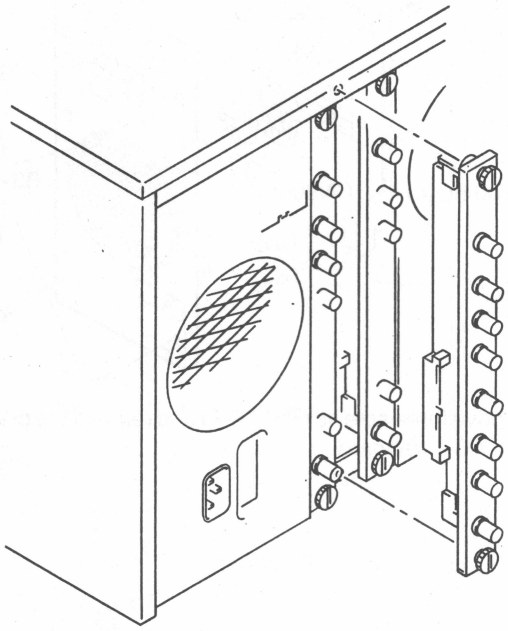

2-11. EXTENSION BOARD

Three extension board types are supplies in HDV-10.
When checking or adjusting the printed circuit board, connect the circuit board to the end of the extension board.

Extension board	Connectable Printed Circuit Board
EX-211	ADA-14, DEC-50, IPR-1, SG-169, TBC-14, TBC-15
EX-212	DM-77, IV-23, MD-65
EX-213	AE-08, ED-23, ENC-12, SV-116, SY-144

2-12. NOTES ON REPAIR PARTS

2-12-1. Notes on Repair Parts

1. **Safety Related Components Warning**
   Components marked with ⚠ on the schematic diagrams, exploded views and electrical spare parts list are critical to safe operation.
   Replace these components with Sony parts whose part numbers appear in this manual or in service bulletins and service manual supplements published by Sony.

2. **Standardization of Parts**
   Repair parts supplied from Sony Parts Center may not always be identical with the parts actually in use due to accommodating the improved parts and/or engineering changes or standardization of genuine parts.
   This manual's exploded views and electrical spare parts list indicate the part numbers of the standardized genuine parts at present.

3. **Change of Parts**
   Regarding engineering parts changes, refer to Section 23, Changed Parts.

4. **Stock of Part**
   Parts marked with "o" in the SP (Supply Code) column of the spare pars list are not normally required for routine service work. Orders for parts marked with "o" will be processed, but allow for additional time for delivery.

5. **Units for Capacitors, Inductors and resistors**
   The following units may be assumed in schmatic diagrams, electrical parts list and exploded views unless otherwise specified.
   Capacitor: μF
   Inductor: μH
   Resistor: ohm

6. **Voltage Selector**
   Repair parts supplied from Sony Parts Center are set to 200-240V. For details, refer to Section 2-9-2, Notes on Voltage Selector.

2-12-2. Replacement Procedure of Chip Parts

Required Tools

Soldering iron: 20W
If possible, use a soldering-iron tip heat-controller set to 270 ± 10°C.
Braided wire: Solder Taul or equivalent
Sony part No. 7-641-300-81
Solder: 0.6mm dia. is recommended.
Tweezers

Soldering Conditions

Soldering iron temperature:
270 ± 10°C
Soldering time: Less than 2 seconds per pin

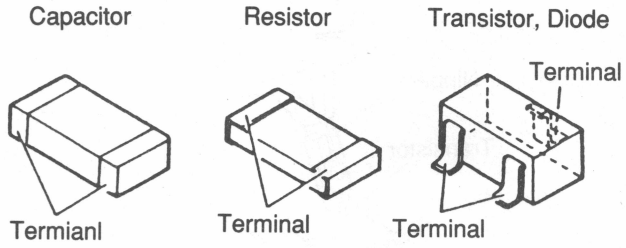

Replacement of Resistor and Capacitor

1. Place the soldering-iron tip onto the chip part and heat it up until the solder is melted. When the solder is melted, slide the chip part aside.

2. Make sure that there is no pattern peeling, damage and/or bridge around the desoldering position.

3. After removing the chip part, presolder the area, in which the new chip part is to be placed, with a thin layer of solder.

4. Place new chip part in the desired position and solder both ends.

NOTE: Do not use a chip part again once it has been removed.

Replacement of Transistors and Diodes

1. Cut the terminals of the chip part with nippers.
2. Remove the cut leads with soldering iron as above.
3. Make sure that there is no pattern peeling, damage and/or bridge around the desoldering positions.
4. After removing the chip part, presolder the area, in which the new chip part is to be placed, with a thin layer of solder.
5. Place new chip part in the desired position and solder the terminals.

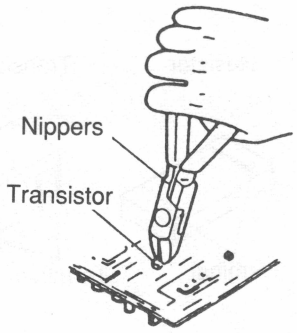

Replacement of ICs

1. Using the braided wire, "SOLDER TAUL" (Sony Part No. 7-641-300-81), remove the solder around the pins of the IC-chip to be removed.
2. While heating up the pins, remove the pins one by one using sharp-pointed tweezers.
3. Make sure that there is no pattern peeling, damage and/or bridge around the desoldering position.
4. After removing the chip part, presolder the area, in which the new chip part is to be placed, with a thin layer of solder.
5. Place new chip part in the desired position and solder the pins.

2-12-3. Removal of PLCC IC

Extraction Tool (for PLCC socket)
Sony Part No. J-6035-070-A

This extraction tool is useful for extracting the IC (PLCC type) inserted into an IC socket, and fits all sizes of ICs from 20 pins through 124 pins.

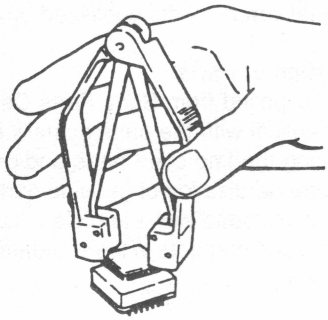

NOTE: Do not try to pull chip carrier out of socket and let the tool action pull it out. Do not squeeze harder than necessary, only enough that the tool action occurs.

How to use the Extraction Tool

1. Spread or compress the tool legs so the tongs will fit into the slots of the chip carrier socket.

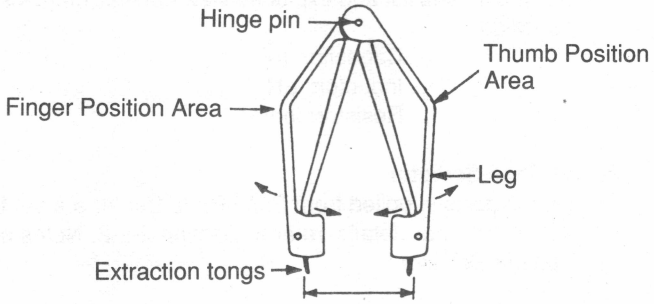

2. Insert the tool tongs into the slots of the carrier socket. Push fully in so that the tool butts on the socket at "A".

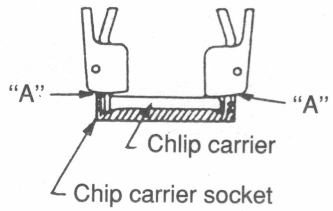

3. Place the thumb and the first and second finger on the ribbed area of the tool. Maintain a small downward force to keep the tool butted on the socket.
   Squeeze the thumb and finger together so that the tool legs tend to straighten.
   This action will draw the chip carrier out of the socket and grip it within the tool legs.
   Maintain the squeezing action so as to hold the chip in the tool, hold the tool over your other hand and relax the squeeze. The chip will fall out of the tool and into your hand.

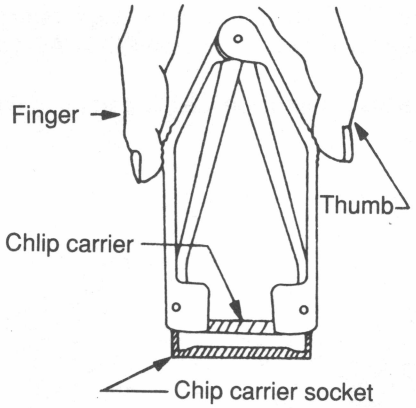

2-12-4. Replacement Procedure of Backup Battery

The following boards have a RAM backup battery.
The replacement procedures are described below:
When replacing a RAM backup battery, be sure to use the battery listed in the parts list.

SY-144 Board

When the battery on SY-144 board reaches the end of its life, error message a "BATTERY" will be displayed on the function control panel. In this case, turn the power OFF, remove the board, and then replace the battery with a new one.
The standard replacement interval is two years.
If the "BATTERY" message is displayed, replace the battery with a new one within seven days.
(When the battery has run out entirely, all of the RAM data will be erased.)

- Backup battery: lithium battery
  Sony part No.: 1-528-229-11

1. Switch OFF the HDV-10.
2. Remove SY-144 board and replace the battery with a new one.

NOTE: When installing the new battery, solder it as shown in the figure.

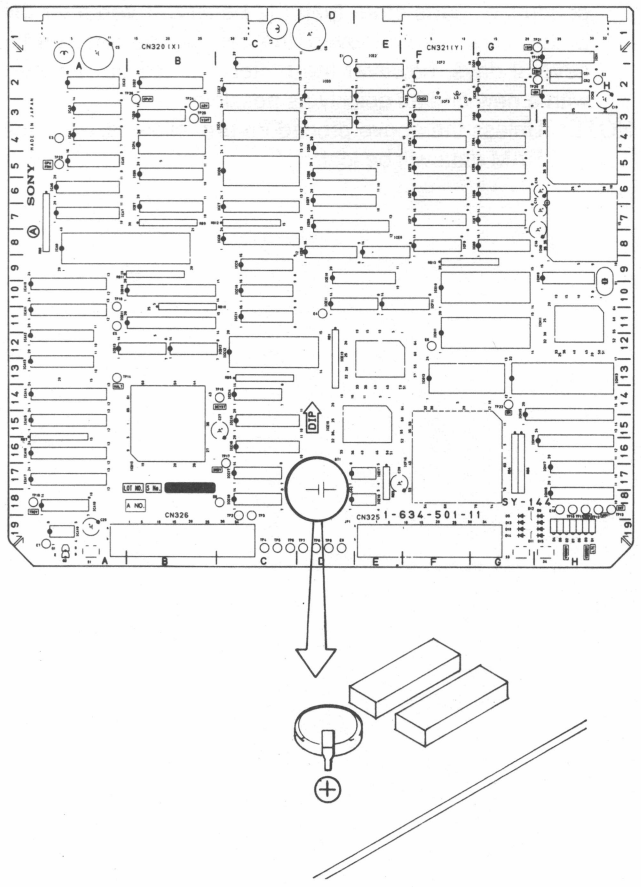

NOTE: When installing the new battery, solder it as shown in the figure.

3. Install SY-144 board, then switch ON the HDV-10.
4. The error message "BATTERY" will appear on the function control panel of the HDV-10. Switch OFF then ON again, and confirm that the error message disappears.

NOTE: If the error message appears after replacing the battery with a new one, check whether or not the new battery is electric poor contact or the end of life.

IF-241 Board

When the battery on IF-241 board runs down , no message will be displayed on the function control panel, hence it is necessary to replace this battery periodically using the operating time of the unit as a rough guide.
The standard replacement internal is 5 years. (The internal of head hours is 5000H.) Replace the battery using the following procedure:

- Backup battery: lithium battery
  Sony part No.: 1-528-218-11

1. Switch ON the HDV-10, after three minutes turn it OFF and then remove the board.
2. When replacing the battery, take care not to touch any couductive parts other than the battery. Even after the battery has been removed, the data will be retained for several days, however the battery should be replaced with a new one as quickly as possible.

NOTE: Unless the above procedure are followed, all of the RAM data will be lost.

2-12-5. Replacement Procedure of Fuse

Temparature fuse (F1) is mounted on PS-187 board.
When the temparature rises inside of unit by the stop of fan motor, and when relay or relay drive circuit of PS-187 board is damaged, this temparature fuse melted about 109°C.
Before replacing the fuse, check the trouble of fuse.

Replacement Procedure

When replacing the fuse, clean inside of the unit (take screws away).

1. Remove PS-187 board. For removing it, refer to Section 2-9-4, Removal of PS-187/PC-56/PC-57/AC-100 boards.

2. Remove the screw of the metalic part fixing R1 and F1.

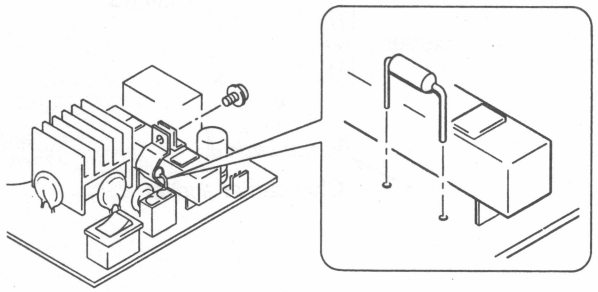

3. Open the metalic part and replace the fuse.

4. Install in reverse procedure of steps 1 through 3 above.

2-13. HOW TO REMOVE A CASSETTE WHEN THE TAPE IS SLACK

Basic Knowledge

A. A cassette tape can be removed by manual operation when tape is slack due to any touble.

B. Perform the cassette-up operation after the tape appearing outside a cassette is completely rewound in the cassette reel. Do not perform the cassette-up operation with the tape appearing outside the cassette. The cassette cover may damage the tape.

Cassette Removal

1. Turn the power off, loosen four screws, and remove the top panel.

2. Turn the manual crank of a loading drive gear ass'y in the direction of the arrow as shown in Fig.2-13-1. The loading ring then rotates in the unthreading end direction and the tape slackens.

3. In the state above, shift the reel lever shown in Fig.2-13-2 repeatedly in the direction of the arrow and rewind the tape in the take-up reel.
   NOTE: The reel lever is put in a relatively narrow place. Take care not to damage the drum and rotary head during the reel lever operation.

* By performing the operations in steps 2 and 3 at the same time, tape slacking is removed and the tape can be rewound without damage.

4. Confirm that the tape is completely put in the cassette.

5. Pull the release lever of the cassette compartment in the direction of arrow A as shown in Fig.2-13-3. Raise the pull-up lever in the direction of arrow B. The cassette tape can then be removed through cassette-up operation.

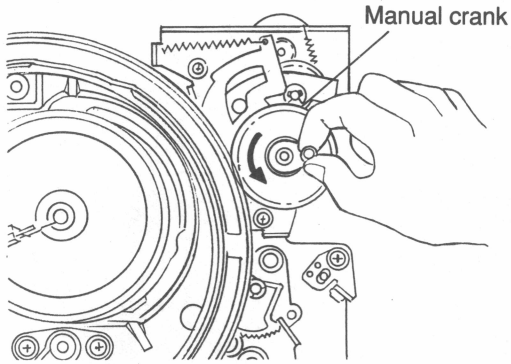

Fig.2-13-1 Manual Operation of Loading Gear

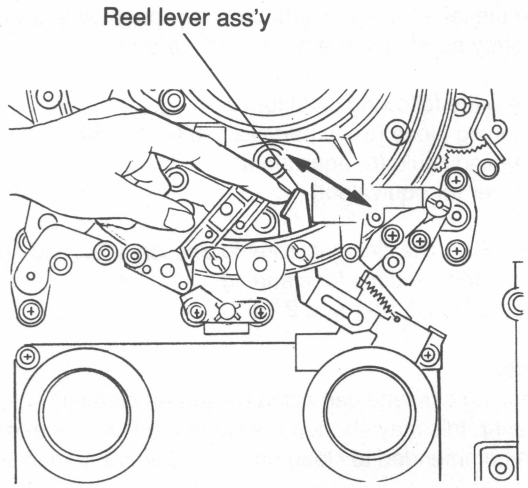

Fig.2-13-2 Manual Operation of Reel

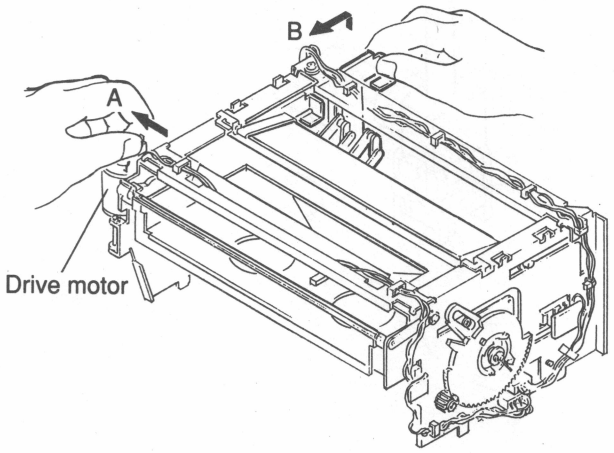

Fig.2-13-3 Manual Operation of Cassette Compartment

2-14. MEASURES AGAINST HEAD CLOGGING

A. Remove the top panel and inspect the drum ass'y and rotary head states when head clogging occurs. Then, clean the tape transport surface of an upper/lower drum, the rotary head, and the drum lead surface.

B. Prepare the following tools for cleaning:
- Cleaning piece (Sony part No. 2-034-697-00)
- Cleaning liquid (or equivalent)
- Skewer (or equivalent)

C. For details of the cleaning, refer to Section 4-3-2 and 4-3-3 "Obey the cautions for cleaning." (Refer to Figs.2-14-1 and 2-14-2.)

Reference:

1. A cleaning cassette can also be used for cleaning. However, this may shorten the life of the Rotary Head. It is recommended to clean each component manually.

2. Use a head tip microscope to check that the head cleaing is performed completely. (Refer to Fig.2-14-3.)

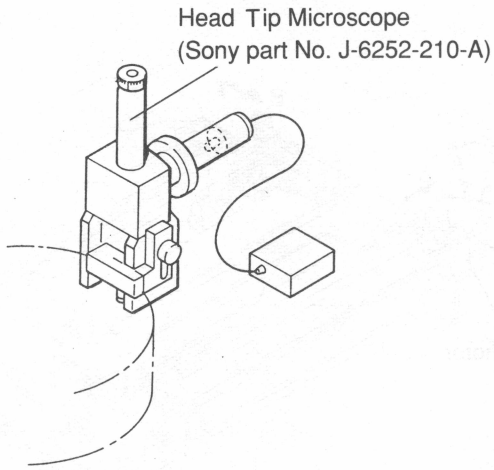

The Head Chip Microscope enables the head tip surface to be checked visually as shown below.

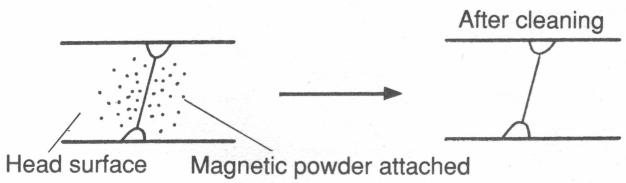

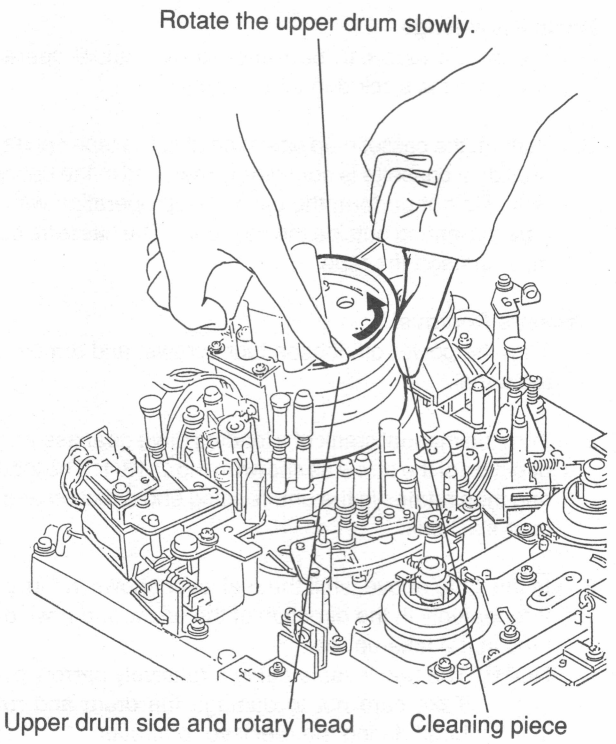

Fig.2-14-1 Cleaning of Rotary Head and Upper Drum's Tape Transport Surface

Cleaning the drum lead surface by putting a skewer (or equivalent) on it.

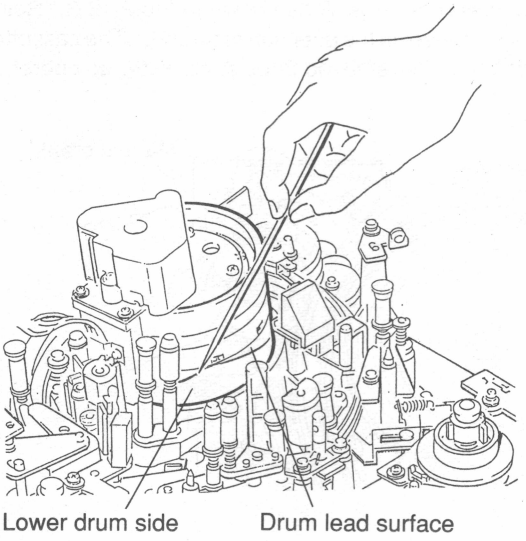

Fig.2-14-2 Cleaning of Drum Lead Surface

2-15. PRECAUTIONS IN REPLACEMENT OF IF-241 AND RM-68 BOARDS

NOVRAMs are mounted on the IF-241 and RM-68 boards. When the IF-241 board is replaced, pull out IC13 and IC14 (NOVRAMs) and mount them on a new IF-241 board. When the RM-68 board is replaced, pull out ICC8 (NOVRAM) and mount it on a new RM-68 board.

- When the IF-241 board is replaced, it is need to memorize the set-up data into NOVRAM 1, NOVRAM 2 and NOVRAM 3 again.
  For details, refer to Section 3-5, Saving and Recalling Set-up Data.

- When the RM-68 board is replaced, perform the following adjustments.

1. Perform Section 12-2-4, Servo Test Mode, and then perform the following checks.
   12-3. Drum Motor Test
   12-4. Capstan Motor Test
   12-5. S-Reel Motor Test
   12-6. T-Reel Motor Test
   12-7. Plunger Test
   12-14. Top/End Sensor Operation Check
   7-18-2. 20. Threading End/Unthreading End Position Adjustment
   7-9-4. 10. Reel FG Adjustment
   7-21. 15. Capstan FG Adjustment
   12-8. Loading Test

2. Turn the power off and then on again.
   Perform the following adjustments.
   12-9. Cassette ID Sensor Operation Confirmation
   12-10. Drum FG Level Check
   12-11. Drum PG Level Check
   12-12. Drum FG Error Correction Adjustment
   7-9-4. 11. Reel Motor Torque Adjustment
   7-10-3. 7. Tension Sensor GAIN/OFFSET Adjustment

   Turn on Bit5 of Dip switch SW2 on the SV-116 board.

   8-2-3. Tape Tension Adjustment (FWD)
   8-2-4. Tape Tension Adjustment (REV)
   12-13. RF Level Meter Adjustment
   8-7-4. PB CTL Phase Adjustment
   8-4-1. Tape Speed Check
   12-12. Drum FG Error Correction Adjustment
   8-8-2. Drum PG Phase Adjustment
   8-9-2. PB SW Phase Adjustment

3. Turn the power off and then on again.
   Perform the following checks.
   (1) The indicator on the SV-116 board shows [00].
   (2) LED D6 (extreme right LED of the four LEDs) on the SV-116 board lights.
   (3) After inserting a cassette tape, the tape transport system operates normally.

2-16. CAUTIONS AFTER REPLACEMENT OF NOVRAM ON RM-68 BOARD

Perform the following adjustment after replacing NOVRAM with a blank ROM.

1. Turn the power on.
   [70] blinks on the SV-116 board's indicator. It shows that the NOVRAM is blank.
   Format the NOVRAM with the following procedures.

2. Enter the test mode by pressing the [SET UP] → [C] → [−] → [SET] keys in the 21 key section.

3. Press the [1] → [7] → [SET] → [+] → [+] keys, select TTP ADJ and press the [SET] key.
   The control panel display changes as follows:

T*R	xx : xx : xx : xx	TEST MOD
TTP	ADJ	0000 0000 0000

4. Next press the [C] → [9] → [0] → [SET] keys.
   The control panel display changes as follows:

xxxx
DEFAULT DATA SET

5. Turn the power off and then on again.
   Confirm that [00] is displayed on the SV-116 board's numerical display LEDs.

6. Then, make an adjustment as described in Section 2-15, Precautions in Replacement of IF-241 and RM-68 Boards.

2-17. ADJUSTMENT AND CHECK AFTER REPLACEMENT OF BOARDS

After board is replaced, perform the following adjustments and checks.

Replaced Board	Adjustment	Check
AC-100	Not required	
ADA-14	16-3. D/A Converter System Adjustment 16-4. A/D Converter System Adjustment	Self Diagnostic Function 3-1. Error Messages
AE-08	13-3. Erase System Adjustment 13-4. Playback System Adjustment 13-5. Recording System Adjustment 13-6. Crosstalk Canceler Adjustment	Self Diagnostic Function 3-2. Test Mode Menu (T02 WFM TEST SELECT) (T13 OSC CONT TEST)
DEC-50	16-5. PLL Adjustment 16-6. ECC Check	Self Diagnostic Function 3-1. Error Messages
DET-3	11-4. Dial Pulse Amplifier Adjustment	
DM-77	14-3. Playback Equalizer Adjustment	Self Diagnostic Function 3-2. Test Mode Menu (T02 WFM TEST SELECT)
DP-105	Not required	Self Diagnostic Function 3-2. Test Mode Menu (T15 LEVEL-CP LAMP TEST)
ED-23	Not required	Self Diagnostic Function 3-1. Error Messages
ENC-12	Not required	Self Diagnostic Function 3-1. Error Messages
IF-241	2-15. Precautions in Replacement of IF-241 and RM-68 Boards	Self Diagnostic Function 3-1. Error Messages
IO-43	Not required	
IO-44	15-37. Video Output Adjustment 15-38. Video Output P_B/B Adjustment 15-39. Video Output P_R/R Adjustment 15-40. SYNC Output Adjustment	
IO-45	Not required	
IO-46	Not required	
IO-53	15-42. WFM Output Level Adjustment	Self Diagnostic Function 3-2. Test Mode Menu (T02 WFM TEST SELECT)
IPR-1	15-16. DLC Level Confirmation 15-17. DLC Level Adjustment 15-18. AD Video Offset Adjustment 15-19. AD Video Y Level Adjustment 15-20. AD Video P_B/P_R Level Adjustment 15-53. Y Phase Adjustment 15-54. Y/C Delay Adjustment	Self Diagnostic Function 3-2. Test Mode Menu (T02 WFM TEST SELECT) (T20 VIDEO TEST SG)

Replaced Board	Adjustment	Check
IV-23	15-9. Video Input Level Adjustment (AGC OFF) 15-10. Video Input Level Adjustment (AGC ON) 15-11. AD Video Level Adjustment (when inputting Y, P_B, P_R) 15-12. Input Matrix Adjustment 15-13. AD Video Level Adjustment (when inputting GBR) 15-14. Y Waveform Distortion 15-15. P_B/P_R Waveform Distortion Adjustment	Self Diagnostic Function 3-2. Test Mode Menu (T02 WFM TEST SELECT)
KC-14	11-3. +5V Adjustment	Self Diagnostic Function 3-3. Maintenance Menu (T17 MAINTENANCE, PANEL)
KY-189	Not required	Self Diagnostic Function 3-3. Maintenance Menu (T17 MAINTENANCE, PANEL)
MB-247	Not required	Self Diagnostic Function 3-1. Error Messages general operation check
MD-65	14-6. Recording Current Adjustment 15-21. DA Video Level Adjustment 15-22. A-CH Non-Linear Video Level Adjustment 15-23. B-CH Non-Linear Video Level Adjustment 15-24. Non-Linear Emphasis Adjustment	Self Diagnostic Function 3-2. Test Mode Menu (T02 WFM TEST SELECT)
PC-56	10-6. Digital +5V/Analog +5V Adjustment	
PC-57	10-7. –5V/+12V/–12V Adjustment	
PS-187	Perform when maintained SENS circuit 10-5. Power Off Sens Level Adjustment	
RE-70	14-4. Erase Frequency Adjustment 14-5. Erasure Adjustment 14-6. Recording Current Adjustment 14-7. Self Recording/Playback Frequency Response Confirmation	
RM-68	2-15. Precautions in Replacement of IF-241 and RM-68 Boards	Self Diagnostic Function 3-1. Error Messages 3-2. Test Mode Menu (T17 MAINTENANCE, TTP ADJ)

Replaced Board	Adjustment	Check
SG-169	15-4. INT Oscillation Frequency Adjustment 15-5. 38.08M PLL Adjustment 15-6. 22M PLL Adjustment 15-7. 16M PLL Adjustment 15-8. Y DL PLL Adjustment 15-41. Y/C Delay PLL Adjustment 15-43. WFM Output Offset Adjustment 15-47. Velocity Error Correction Adjustment 15-48. SYNC Phase Preset Adjustment 15-49. Video Phase Adjustment 15-50. Analog Blanking Adjustment 15-51. Y/C Phase Adjustment	Self Diagnostic Function 3-1. Error Messages 3-2. Test Mode Menu (T02 WFM TEST SELECT)
SMB-7	Not required	
SMB-8	15-28. SYNC AGC Adjustment 15-32. SMB Output Offset Adjustment 15-33. SMB Output Level Y/G Adjustment 15-34. Output Matrix Adjustment 15-35. SMB Output Level P_B/B Adjustment 15-36. SMB Output Level P_R/R Adjustment	Self Diagnostic Function 3-2. Test Mode Menu (T02 WFM TEST SELECT)
SV-116	12-3. Drum Motor Test 12-4. Capstan Motor Test 12-5. S-Reel Motor Test 12-6. T-Reel Motor Test 12-7. Plunger Test 12-8. Loading Test 12-9. Cassette ID Sensor Operation Confirmation 12-10. Drum FG Level Check 12-11. Drum PG Level Check 12-12. Drum FG Error Correction 12-13. RF Level Meter Adjustment	Self Diagnostic Function 3-1. Error Messages 3-2. Test Mode Menu (T17 MAINTENANCE) 3-3-3. Version Menu
SW-352	Not required	Self Diagnostic Function 3-1. Error Messages
SY-144	Not required	Self Diagnostic Function 3-1. Error Messages 3-3-3. Version Menu
TBC-14	15-44. Sampling Phase Adjustment 15-45. Velocity Error Level Adjustment	Self Diagnostic Function 3-2. Test Mode Menu (T02 WFM TEST SELECT)
TBC-15	15-27. WFM Output Offset Adjustment 15-29. DA Y Level/Offset Adjustment 15-30. DA P_B Level/Offset Adjustment 15-31. DA P_R Level/Offset Adjustment 15-46. Velocity Error Offset Adjustment 15-52. P_B/P_R Phase Adjustment	Self Diagnostic Function 3-2. Test Mode Menu (T02 WFM TEST SELECT)
VR-91	Not required	Self Diagnostic Function 3-1. Error Messages
VR-92	Not required	
VR-93	Not required	

SECTION 3
SELF DIAGNOSTIC FUNCTION

3-1. ERROR MESSAGES

If an error occurs after turning the power on or during operation, an appropriate error message is displayed on the function control panel of the VTR. The error message can be superimposed on the TV monitor by one or the menu settings (S59. MIXED CHARA OUTPUT).
The error message and the cause of each error are listed next.

The function buttons are as shown below.

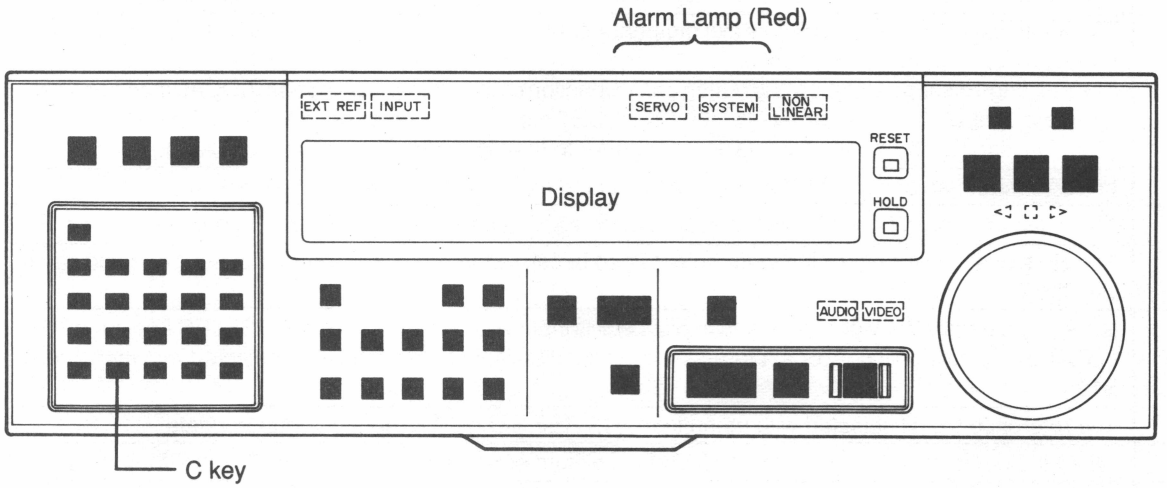

Error Message	Description
ABORT	When one of the following errors occurs, this message appears. At the same time, the unit switches from the current operation mode to STOP mode. To erase the message, press any button on the function control panel. ① With the tape having reached the point six frames before the video or audio IN point in AUTO EDIT or PREVIEW mode, synchronization has not been achieved or the servo has not been locked. ② During 2-unit operation in AUTO EDIT or PREVIEW mode, prerolling started by a PREROLL command issued from this unit to the other ended without resulting in cuing up.
ADA14 BD	ADA-14 board is not inserted correctly, or the CPU bus interface is faulty.
AE08 BD	The AE-08 board is not inserted correctly, or the CPU bus interface is faulty.
CAP ERR	The frequency generator system or the drive system of the capstan motor is faulty.
CAS DRV	The cassette compartment motor drive system is faulty.
CAS SENS	Photosensor failure in the cassette compartment.
CAS TMO	The cassette up/down motion in the cassette compartment did not end within the designated time.
DATA ERR	Either of the following cases occurred. To erase the message, press any function button or the C key on the function control panel. ① An invalid time code or timer value was entered from the 21-key section. ② An undefined command was received from the remote controller connected to the unit.
DEC50 BD	DEC-50 board is not inserted correctly, or the CPU bus interface is faulty.
DEW DET	The dew sensor in the drum section detected dew condensation. When this message appears, you cannot load a cassette in the unit. If a cassette is already loaded, the tape transport section of the unit becomes inoperable. Wait until the message disappears without turning the unit off.
DP105 BD	The DP-105 board is not inserted correctly behind the level control panel, or the flat cable to connect the DP-105 and the SW-352 board is not connected correctly.
DRUM ERR	The frequency generator system, drive system or reference system of the drum motor is faulty.
ED23 BD	ED-23 board is not inserted correctly, or the CPU bus interface is faulty.
EMPH MIS	The emphasis setting indication given when the EMPHASIS button is pressed is inconsistent with the emphasis information contained in the tape playback signal.

Error Message	Description
ENC12 BD	ENC-12 board is not inserted correctly, or the CPU bus interface is faulty.
ID ERR	The cassette ID hole sensor switch is faulty.
IF241 BD	IF-241 board is not inserted correctly, or the CPU bus interface is faulty.
LINE ERR	With another unit connected as the master to one of the REMOTE connectors of this unit, the CONTROL P or R button of this unit was pressed. When the recorder is in the synchronized sequential mode, the slave unit mode is malfunctioning (for example, the cassette tape isn't inside or the REMOTE/LOCAL switch is set to LOCAL). To erase the message, press any function button.
LOST LCK	The drum or capstan servo lock was lost momentarily during recording or editing. Even if this error occurs, the operation in progress will continue. The message disappears when any button on the function control panel is pressed in LOCAL mode or when a remote control command or a LOST LOCK RESET command is received in REMOTE mode. (For checking the locations of lost-lock errors, refer to the Operation Manual on page A-4.)
MUTE	In PLAY mode, an unconcealable error was detected in the digital audio playback signal.
NEGATIVE	The video or audio IN point is preceded by the corresponding OUT point. Preset its point.
NO RF	The RF signal is missing, or it cannot be obtained because the drum is stopped with the TAPE indicator lit in the 21-key section.
NO REF	No reference signal for video recording or playback is input with menu item S12 REF SELECT set to INPUT or EXT REF. A video signal or a reference signal must be input to the connector selected with menu item S12.
NO REF	The reference signal selected with menu item S12 REF SELECT is input but inappropriate.
NOVRAM	When the power was turned on, a NOVRAM checksum error was detected on IF-241 or RM-68 board.
REEL ERR	The frequency generator system or drive system of the reel motor is faulty.
RM-68 BD	RM-68 board is not inserted correctly, or the servo CPU bus interface is faulty.
SG-169 BD	SG-169 board is not inserted correctly, or the CPU bus interface is faulty.
SLACK	The tape slackened while being moved. While this message appears, the unit does not accept any operation command. To erase the message, once turn the unit off or eject the cassette.
SRV ERR	The interface between SY-144 and SV-116 boards is disabled because of an error in the servo system.
SV-116 BD	SV-116 board is not inserted correctly, or the CPU bus interface is faulty.
SV DBUG	The servo system is in debug mode. While this message appears, the unit cannot operate normally. To exit the mode, turn the unit off and set SW2-8 of the SV-116 board to OFF.
SV TEST	The servo system is in test mode. This message does not appear during normal use of the unit. It appears only when the servo system is tested.
SW-352 BD	SW-352 board is not inserted correctly, or the CPU bus interface is faulty.
SY-144 BD	SY-144 board is not inserted correctly, or the CPU bus interface or I/O port is faulty.
SY NRDY	The SY READY signal from the SY-144 board is not activated. If this message appears, the unit is out of order. Call Sony service personnel.
SYS ERR	Either of the following two cases occurred: ① A short-circuiting key was detected in the initial automatic checkup. In this case, the SYSTEM indicator on the function control panel will light and the buzzer will sound. ② An error was detected by the CPU on SY-144 board during ordinary operation.
TAPE DEF	The tape is broken. Replace it.
TAPE END	All of the tape is on the take-up reel.
TAPE OUT	No cassette is loaded. In this case, the unit enters STOP mode automatically.
TAPE TOP	All of the tape is on the supply reel.

Error Message	Description
TEN SENS	The tension sensor driving current is not flowing. Check to see if the CN384 connector of the RM-68 board is securely connected.
TEST MOD	After the unit was operated in TEST mode from the test mode menu, the SET UP key was pressed to leave SET UP mode without resetting the test mode menu settings to the defaults.
UNLD ERR	The take-up reel does not work for unloading the cassette. Unload it by hand, then check the reel motor in test mode.
VR-91 BD	VR-91 board is not inserted correctly, or the CPU bus interface is faulty.
VR92 BD	The VR-92 board is not inserted correctly behind the level control panel, or the flat cable to connect the VR-92 and the SW-352 board is not connected correctly.

Checking the locations of lost-lock errors

If the drum or capstan servo lock is lost in PLAY, REC, or EDIT mode (lost-lock error), the time code representing the error location is stored in memory. You can recall the stored time code for checking in PLAY, REC, EDIT, or STOP mode.

Recalling the stored time codes

To recall the time codes representing the lost-lock error locations, rotate the search dial in either direction while holding down the STANDBY button in PLAY, REC, or EDIT mode or the STOP button in STOP mode. The time codes that have been stored will appear in block 4 of the display in the ascending or descending order depending on the direction of rotating the search dial while block 6 shows "LOST LCK." Every time a new time code appears in block 4, the time code previously displayed in the block will move to block 3.

Erasing the stored time codes

To erase the stored time codes representing lost-lock error locations, use either of the following two methods:

- Switch the unit from STOP mode to PLAY, REC, or EDIT mode.
- While holding down the STANDBY button, press the RESET button.

(The IN and OUT points that have been stored will be retained without being erased.)

Checking the locations of muted errors

If an unconcealable error is detected in the digital audio playback signals in PLAY mode and is muted, the time code representing its location is stored in memory. You can recall or erase the stored time codes in the same manner as used for the lost-lock errors. When they are displayed, "MUTE" will appear in block 6.

Other messages indicated in block 6 of the display

The status on the HDV-10 is also indicated in block 6 of the display as listed below.
The status messages TAPE OUT, TAPE TOP, and TAPE END are also displayed in block 6.

Status	Description
FREEZE	This message appears when: • The TAPE indicator lights. • The menu item S04 FREEZE MODE is set to FIELD1, FIELD2, or FRAME. • The stop button is pressed during playback. Then a freeze frame picture is output.
REPEAT	This message appears during playback in the PROGRAM REPEAT playback mode.
SEEKING	This message appears while the unit is searching for the playback start point in the synchronized sequential playback mode. At this time, the video output signal is black and the audio output signal is muted.
SEQ PLAY	This message appears during playback in synchronized sequential playback mode.
SEQ REC	This message appears during recording in synchronized sequential recording mode.

3-2. TEST MODE MENU

This unit is provided with test functions for performing various tests.

When performing a test, operate the 21-key on the function control panel and select a test menu, as shown below. An operation example is shown on the following page.

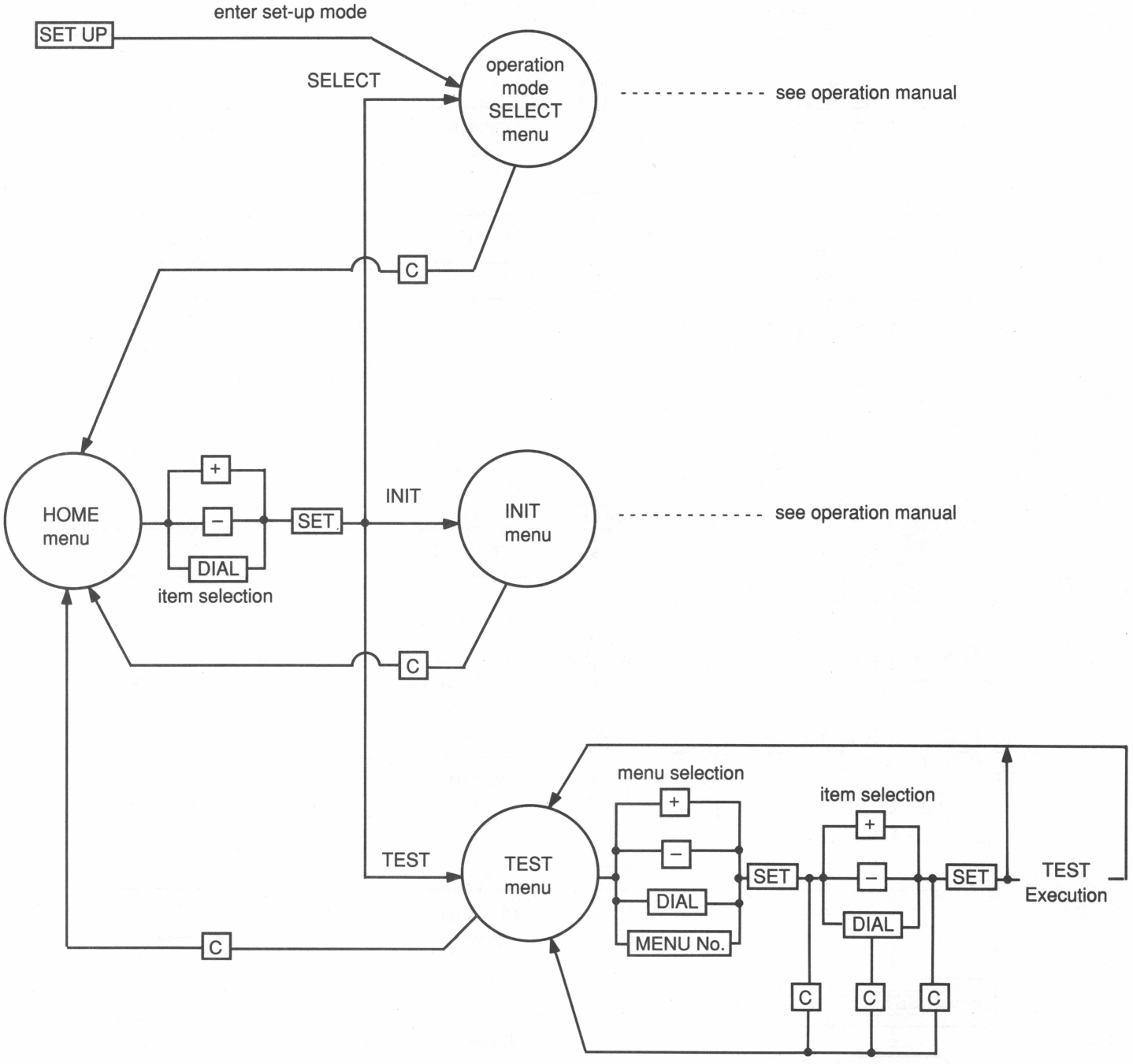

1) □ shows key or dial operations.
2) Press SET UP key to exit for set-up mode.
3) Press C key to return to the previous step.

Operation flow of TEST menu or example of operation

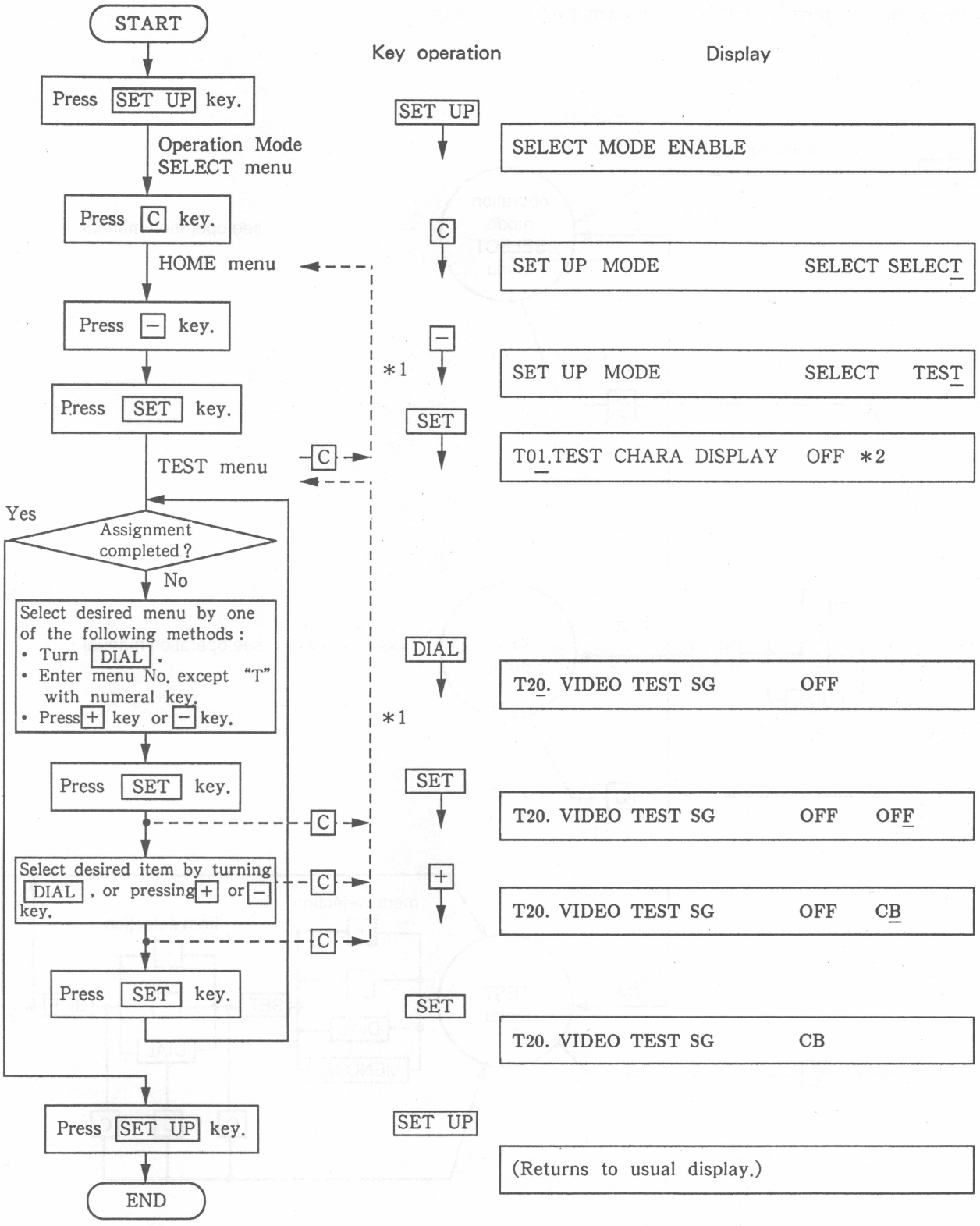

NOTE:
You cannot use the search dial for menu settings while the JOG button, SHUTTLE button or VAR button is lit.

*1 . The broken lines indicate how the C key will retrace one step. This will not work, however, once the step has been committed with the SET key.
*2 . This shows the previously selected item.

The contents of the test menus are shown below.

Note 1: The □ indication of each item indicates the normal setting.
Note 2: Upon completion of testing, return each menu to the normal setting before cancelling the TEST mode. If the TEST mode is cancelled while an individual menu remains activated (when an item not displayed in □ of the mode is selected), TEST MOD will be displayed on BLOCK 6 of the function control panel.
Note 3: If the power switch is truned OFF while the test mode of an individual menu remains activated, the TEST mode will be automatically cancelled.

Menu No.	Menu	Items	Discription (When selecting except for initial settings)
T01	TEST CHARA DISPLAY	ON [OFF]	Superimpose the complete character set on the picture monitor.
T02	WFM TEST SELECT	[OFF] MD-65 IV-23 DM-77A DM-77B TBC-14 TBC-15 SG-169 IPR-1 SMB-8 IO-53 AE-08	Select the signal to be output to the WAVEFORM connector. This is done hierarchically; first select the board, using the search dial or the '+' and '–' keys, then press [SET] , then use the search dial or the '+' and '–' keys again to select the signal to be output from that board. It is not necessary to press [SET] to confirm the signal selection. Press [C] to return to selecting the board. When the default setting (OFF) is selected, the signal output is determined by the setting of S03 WFM SELECT. The other settings listed in the column on the left are the board names.
T03	WFM TRIGGER SELECT	[AUTO] REF FRM SEG H SEG V PB H PB V TRG BUS REF HD REF VD	Select the signal to be output to the WAVEFORM TRIGGER connector. AUTO: The signal selected by S12 REF SELECT or T02 WFM TEST SELECT is output. REF FRM: REFERENCE FRAME synchronization signal is selected. SEG H: SEGMENT H synchronization signal is selected. SEG V: SEGMENT V synchronization signal is selected. PB H: Playback H synchronization signal is selected. PB V: Playback V synchronization signal is selected. TRG BUS: TRIGGER BUS signal is selected. REF HD: REFERENCE H synchronization signal is selected. REF VD: REFERENCE V synchronization signal is selected.
T04	CUE METER SELECT	[OFF] CTL E TC E CUE E CTL B TC B CUE B	Selects the item whose level is to be indicated on the CUE level meter. OFF: Cue channel audio signal CTL E: Control channel erase current TC E: Time code channel erase current CUE E: Cue channel erase current CTL B: Control channel bias current TC B: Time code channel bias current CUE B: Cue channel bias current

Menu No.	Menu	Items	Discription (When selecting except for initial settings)
T05	ENC/DEC EE	[OFF] ON	Selects the internal route to be followed by the digital audio signals during EE mode. OFF: The digital audio signals are routed through an A/D converter, a signal selector circuit and a D/A converter. (The system delay involved is ignorable.) ON: The digital audio signals are routed through an A/D converter, a signal selector circuit, an encoder, a decoder and a signal selector circuit. (A system delay of 2 frames will occur. When recording digital audio signals on the cue channel by setting S13 CUE INPUT SELECT to DIGITAL, this setting will enable precise synchronization between the cue and video channels.)
T06	VIDEO EE LEVEL CHECK	[OFF] ON	When this menu is set to on, the recorder displays the input video signal level on the oscilloscope. You can adjust the signal level displayed on the oscilloscope. The recorder uses the inside and outside generator so that the oscilloscope can display the signal for each field. OFF: switch outside input ON: switch inside signal generator
T07	FORCED NON LINEAR	[OFF] ON	Activates the I86 NON LINEAR item setting or not when in the editing mode. (The I86 NON LINEAR item switches on or off the non linear emphasis for the video input color difference signals PB AND PR.) OFF: Deactivates the I86 setting. The recorder accepts the non linear of a signal from a player as it is, regardless of the I86 setting. ON: Activates the I86 item setting.
T12	NORMAL FWD TEST	ON [OFF]	In STOP mode, the NORM FWD + EE signal can be made active.
T13	OSC CONT TEST	ON [OFF]	The audio bias/erase oscillator can be controlled without tape transport.
T15	LEVEL-CP LAMP TEST	ON [OFF]	Carry out a test of the indicators on the level control panel.
T16	VIDEO REC TEST	ON [OFF]	Operate the video signal recording system in STANDBY OFF mode.
T17	MAINTENANCE	[OFF] TTP ADJ PANEL VERSION EXTEND	Carry out tests of the control panel and check the tape transport system. TTP ADJ: Check mode for the tape transport system. PANEL: Control panel test mode. VERSION: Display the version number of the internal program. EXTEND: Extension menu E01 to E22. (See Section 3-3-4. EXTEND Menu.)
T19	MEMORY DUMP	[OFF] ON ADDRESS	Output the contents of CPU memory from the VIDEO MONITOR OUTPUT connectors. ON: Display the memory contents of the SY and SV boards. ADDRESS: Specify a memory address.
T20	VIDEO TEST SG	[OFF] CB MB LINEAR	Operate the internal signal generator. CB: Color bar signal MB: Multi-burst signal LINEAR: Linearity signal
T22	AUDIO TEST SG	[OFF] 400Hz 1kHz 3kHz	Operate the internal audio test signal generator. The level is fixed at +4dBm.

3-3. MAINTENANCE MENU (T17.MAINTENANCE)

The T17. MAINTENANCE menu among the test menu is used for the tape transport and servo system adjustments and for the function control panel checks.
One of the following five items is selected in accordance with the objective at hand.
The operation sequences for the menu are in the end of each section.

T17. MAINTENANCE menu

Item	Description
OFF	No testing
TTP ADJ	This item is selected when checking and/or adjusting the tape transport and servo systems. See Section 3-3-1. TTP ADJ menu. NOTE: When the 0 key in the 21-key section is pressed while the TEST switch (S3) on SY-144 board is kept depressed, direct entry is made into the TTP ADJ menu.
PANEL	This item is selected when conducting checks on the function control panel. See Section 3-3-2. PANEL menu. NOTE: When the TEST switch (S102) on KC-14 board is pressed, direct entry is made into the PANEL menu.
VERSION	This menu is selected when checking the software version of the IF, SY and SV boards. See Section 3-3-3. VERSION menu.
EXTEND	This menu is selected to extend the menu. See Section 3-3-4. EXTEND menu.

3-3-1. TTP ADJ Menu

Operation Sequence for the TTP ADJ Menu

Steps ① through ④ below allow entry into the test menus and the subsequent steps up to ⑧ allow entry into the TTP ADJ menu.

① Press the [SET UP] key.
The OPERATION MODE SELECT menu is automatically selected.

② Press the [C] key to select the HOME menu.

③ Press the [–] key to select TEST menu.

Display

SELECT MODE ENABLE

SET UP MODE	SELECT	SELECT

SET UP MODE	SELECT	TEST

④ Press the [SET] key to establish the TEST menu.

T01. TEST CHARA DISPLAY	OFF

⑤ The number of the desired menu is assigned using the [0] through [9], [+] and [–] keys or Search Dial.
For instance, T17 is selected by keying in [1] and [7].

T17. MAINTENANCE	OFF

⑥ Press the [SET] key to establish the menu number selection.

T17. MAINTENANCE	OFF	OFF

⑦ Select TTP ADJ using the [+] and [–] keys or Search Dial.
(Select PANEL if the PANEL menu is to be entered.)

T17. MAINTENANCE	OFF	TTP	ADJ

⑧ Press the [SET] key.
It is now entered into the TTP ADJ menu.

TTP ADJ	0000 0000 0000

Entry into the TTP ADJ menu causes the functions of the keys in the 21-key section to be changed, as indicated below.

NOTE: The upper row of the display is not related to the menu selection.
The contents of this display are determined by the VTR operation.

Normal mode

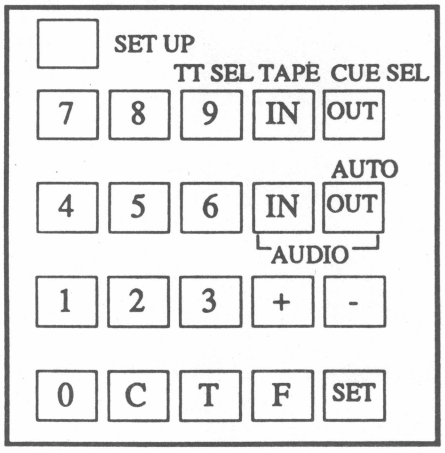

TTP ADJ mode

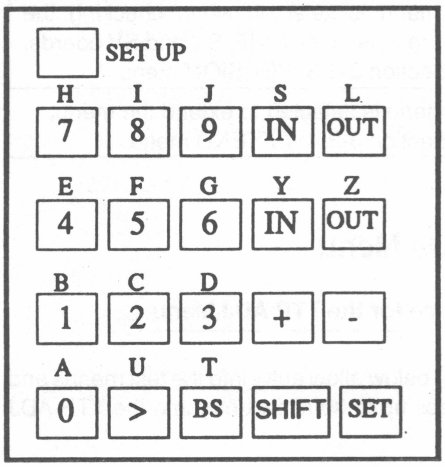

[SHIFT] is the shift key. When, for instance, the [0] key is pressed with the [SHIFT] key already depressed, the result is the same as if the [A] key had been pressed.

As for the contents and the actual operation of the TTP ADJ menu of T17. MAINTENANCE menu, please refer to Section 8 "Tape Transport System Adjustment" and Section12 "Servo System Adjustment" of the MAINTENANCE MANUAL.

To write the servo adjustment data into the NOVRAM

① Press the [C], [9], [9] and [SET] keys. The state is in TTP ADJ menu.

DATA SAVE OK?	0000 0000 0000

② Press the [F] and [IN] (white) keys. "Y" will be input. Then press the [SET] key, and data save starts.

DATA SAVE OK? Y	0000 0000 0000

③ When the adjustment data save finishes, [DATA SAVED] is displayed.

DATA SAVED	0000 0000 0000

④ To interrupt the data save from the state ①, press the [SET] key only.
[ABORTED] is displayed, and data save will be interrupted.

ABORTED	0000 0000 0000

NOTE: Do not turn the power off or perform other key operation during data write. Otherwise, the adjustment data will be distroyed.

To put back all the adjustment data into the state when the power is first turned ON

Turn the power OFF and ON again to invalidate the changed adjustment data to put back into the state when the power is first turned ON.

To put back all the adjustment data into the state when the unit was shipped from the factory

When the unit was shipped from the factory, the servo adjustment data has been saved into the back up sphere. First, read out these data onto the memory. Then write these data into the NOVRAM. The adjustment data is back to the initial factory setting.

① Press the [C], [1], [9] and [1] keys. The state is in TTP ADJ menu.

BACKUP DATA LOAD OK?	0000 0000 0000

② Press the [F] and [IN] (white) keys. "Y" will be input. Then press the [SET] key. The data load carrys out.

BACKUP DATA LOAD OK? Y	0000 0000 0000

③ When back up data load finishes, [BACKUP DATA LOADED] is displayed.

BACKUP DATA LOADED	0000 0000 0000

④ Then perform [To write in the servo adjustment data into the NOVRAM] to write the adjustment data into the normal NOVRAM. The adjustment data is set into the state when the unit was shipped from the factory.

⑤ To interrupt data load from the state ①, press the [SET] key only. [ABORTED] is displayed, and data load will be interrupted.

ABORTED	0000 0000 0000

3-3-2. PANEL Menu

The following menus are included in the PANEL menus of the T17. MAINTENANCE menu. These enables tests on the function control panel to be conducted.

Menu 0: VERSION
The software version of the function control panel and check sum, etc., will be displayed as follows.

0:VERSION 01.00.01	FLAG:□□□□□□ SUM:□□□□

Version (1-0-1 in this example)
Internal status
Check sum

Menu 1: ALL DOT
All dots on the display will light.

Menu 2: ALL CHR
All characters on the character generator will appear on the display as shown below.

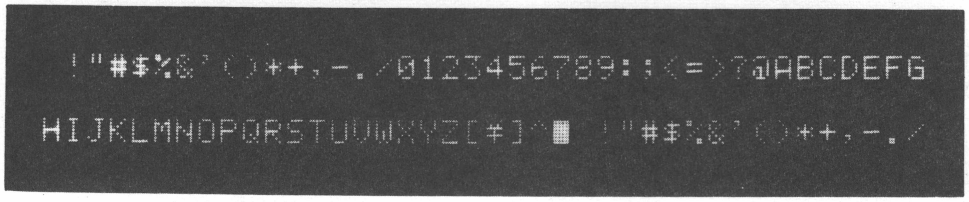

Menu 3: LMP TST
The lamps on the function control panel will be checked. Blocks of lamps light successively at intervals of about 2 seconds, as follows.
When the [+] key is pressed, the unit will go into the mode whereby the lit blocks shift each time the [+] key is pressed.

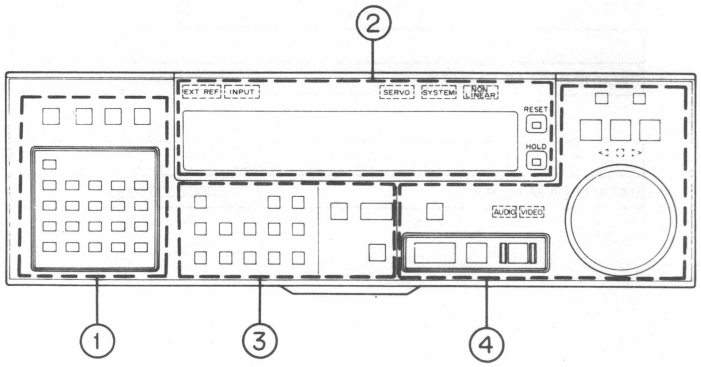

Lamps light successively.

Menu 4: KEY

When a switch on the function control panel is pressed, the name corresponding to that switch will be displayed. Simultaneously, the number of pulses and direction data will be displayed in accordance with the rotation of the JOG DIAL.

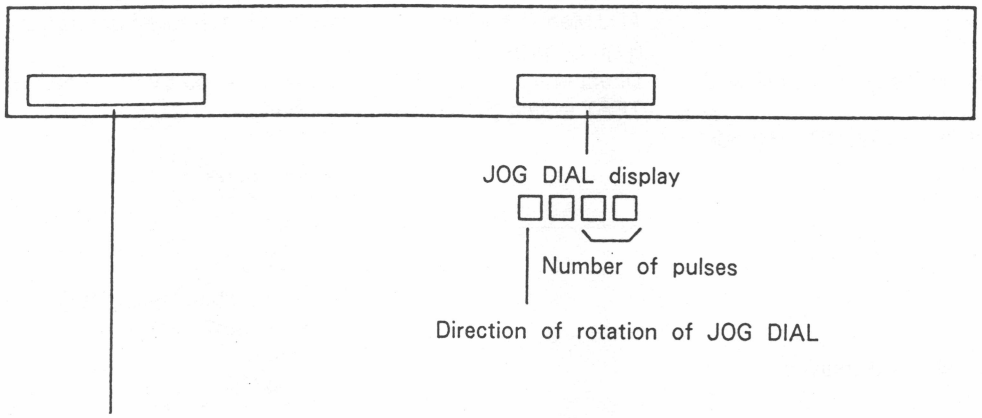

Switch name will displayed. See the table shown below.

No.	Switch Name	Display	No.	Switch Name	Display
1	STOP	STOP	29	CUE	CUE
2	PLAY	PLAY	30	ASSEMBLE	ASSEMBLE
3	REC/EDIT	REC	31	INSERT	INSERT
4	VAR	VARIABLE	32	SPOT ERASE	SPOT ERS
5	VAR MEMORY	VR MMRY	33	INPUT	INPUT
6	JOG	JOG	34	0 (21 key)	0
7	SHUTTLE	SHUTTLE	35	1 (21 key)	1
8	STANDBY	STANDBY	36	2 (21 key)	2
9	PREROLL/SEARCH	PREROLL	37	3 (21 key)	3
10	PREVIEW/REVIEW	PREVIEW	38	4 (21 key)	4
11	CUE ENTRY	CUE ENT	39	5 (21 key)	5
12	RESET	RESET	40	6 (21 key)	6
13	HOLD	HOLD	41	7 (21 key)	7
14	VIDEO IN	VID IN	42	8 (21 key)	8
15	VIDEO OUT	VID OUT	43	9 (21 key)	9
16	AUDIO SPLIT IN	AD SPL I	44	C (21 key)	C
17	AUDIO SPLIT OUT	AD SPL O	45	T (21 key)	T
18	AUDIO SPLIT	AD SPL	46	F (21 key)	F
19	TC	TC	47	+ (21 key)	+
20	DA-1	DA-1	48	– (21 key)	–
21	DA-2	DA-2	49	SET (21 key)	SET
22	DA-3	DA-3	50	IN (21 key)	VIDEO IN
23	DA-4	DA-4	51	AUDIO IN (21 key)	AUDIO IN
24	VIDEO	VIDEO	52	OUT (21 key)	VIDEO O
25	DA-5	DA-5	53	AUDIO OUT (21 key)	AUDIO O
26	DA-6	DA-6	54	SET UP (21 key)	SET UP
27	DA-7	DA-7	55	CONTROL P	CTRL-P
28	DA-8	DA-8	56	CONTROL R	CTRL-R

Menu 5: BUZZER
A beep tone will be emitted 8 times.
By pressing the [SET] key, the test can be performed again.

Menu 6: END
The PANEL mode will end.

Menu 7: MONITOR
Used to check the memories of the function control panel and so on. Not normally used.
When this menu has been selected, cancel MONITOR mode by the following key operations.

Press the [SET] key.
Press the [9] key.
Press the [SET] key.

After the operations, 7: MONITOR will be displayed on the control panel.

Operation Sequence for the PANEL Menu

The test menu and then also the PANEL menu can be entered using the same key operations as for entry into the TTP ADJ menu. Simply select [PANEL] instead of [TTP ADJ] in step ⑦ of the above-mentioned "Operation Sequence for the TTP ADJ Menu", and the PANEL menu will be entered when steps ① through ⑨ are carried out.
Direct entry into the PANEL menu is made by pressing the TEST switch (S102) on KC-14 board.

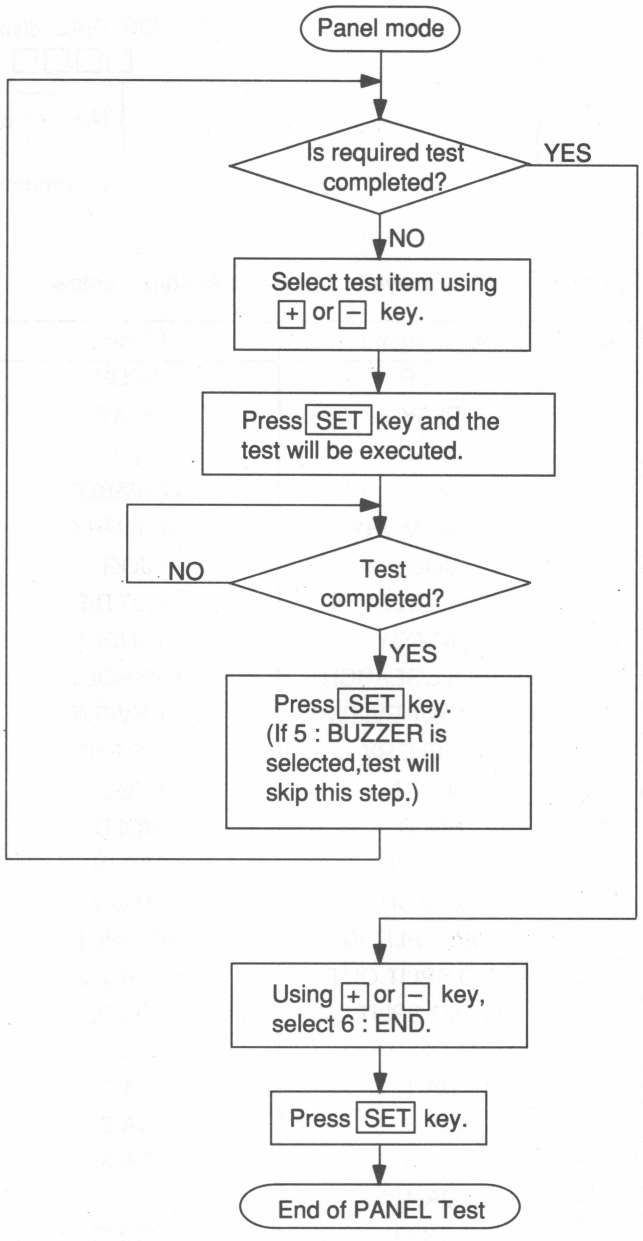

By pressing [SET UP] key, unit will return to normal operating mode.

3-3-3. VERSION Menu

The software version of SY and SV boards is displayed on the function control panel by the VERSION menu under the T17. MAINTENANCE menu.

Example:

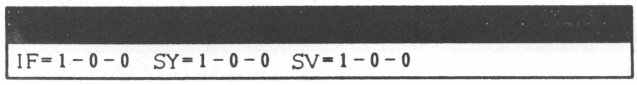

IF=1-0-0 shows that the version 1-0-0 program is written onto ICH3 on SY-144 board.

SY=1-0-0 shows that the version 1-0-0 program is written onto ICA8 on SY-144 board.

SV=1-0-0 shows that the version 1-0-0 program is written onto ICA9 on SV-116 board.

3-3-4. EXTEND Menu

The item shown below are selectable in the EXTEND menu under the T17 MAINTENANCE menu.
After the test menu is canceled, the items selected in the EXTEND menu are kept.
Refer to example of operation on page 3-18.

Menu No.	Menu	Item	Discription
E01	TAPE/EE AT REC INHI	[TAPE] EE	When both the audio and video REC INHIBIT switches are on, and TAPE/EE mode is selected, select the output signal in STANDBY ON mode.
E03	AUTO SHUT OFF BUZZER	[DISABLE] ENABLE	When the automatic off function is used for STILL mode or STANDBY ON mode, select whether to sound a buzzer about 30 seconds before the automatic shut off takes effect. DISABLE: No buzzer ENABLE: Sound the buzzer NOTE: The buzzer will not sound if Menu I12 STILL OFF TIMER setting is less than 30 seconds.
E05	BINARY GROUP FLAG	[BINARY] ISO	Specify the user bit data type by writing 00 or 10 in bits 43 and 59 of the LTC. BINARY: 00 ISO: 10
E07	REC INHI STATUS	[AND] OR	Select the conditions for the recording inhibit status to be transmitted in response to a 9-pin serial remote command. AND: In the editing channel preset state, when both of the audio and video REC INHIBIT switches are on. OR: When either of the audio and video REC INHIBIT switches is on, or when all of the editing channel preset buttons are off.
E08	INPUT VIDEO AGC	DISABLE [ENABLE]	Enable or disable the automatic gain control on the video input circuit. DISABLE: invalid ENABLE: valid
E09	AD VIDEO SP SELECT	[DLC] FREQ	During EE or normal playback, select the A/D converter level reference on TBC-14 board. DLC: Select the dynamic linearity control signal. FREQ: Select the frequency reference signal.
E10	HOLD UB SENSE RETURN	[DISABLE] ENABLE	When enabled, HOLD UB DATA is transmitted in response to a 9-pin serial remote command.

Menu No.	Menu	Item	Discription
E15 *1	TC OUTPUT DELAY	0 FRAME [AUTO] 2 FRAME	For two-unit editing, the time code output from the 9-pin serial remote connector and the TIME CODE OUT connector can be advanced by two frames with respect to the video output. *2 0 FRAME: Output the time code in phase with the video output. AUTO: Advance the time code by 2 frames only when the editing channel is preset. 2 FRAME: Advance the time code by 2 frames.
E16	SHUTTLE×8 LIMITER	[DISABLE] ENABLE	The maximum speed in SHUTTLE mode can be changed. DISABLE: Maximum is 40 times normal speed. ENABLE: In order not to lose the playback picture during fast winds when using a DTR-2000 for example, the maximum speed is set to 8 times normal.
E20	EJECT INHIBIT	[DISABLE] ENABLE	The operation of the EJECT button can be inhibited. DISABLE: This disables the inhibiting function, thus enabling the EJECT button. ENABLE: This enables the inhibiting function, thus disabling the EJECT button.
E21	HOURS METER DISP	[DISABLE] ENABLE	The hours meter display can show three different running times as listed below, or the number of times a cassette has been loaded. DISABLE: This selection is always shown when this item is displayed. No hours meter display. ENABLE: Use the [+] and [−] keys (or the search dial) to select the display required. H01: OPERATION HOURS Show the total hours the unit has been operating. H02: DRUM RUNNING HOURS Show the hours the drum head has been rotating. H03: TAPE TRAVELING HOURS Show the hours the tape transport has been operating. H04: CASSETTE LOADING TIMES Show the number of cassette loadings.

*1) Only effective when E15 is set to FORWARD.

*2) To allow 2 frames for video/digital audio processing time, the time code is normally delayed by 2 frames, and output in phase with the video output.

Operation flow of EXTEND menu or example of operation

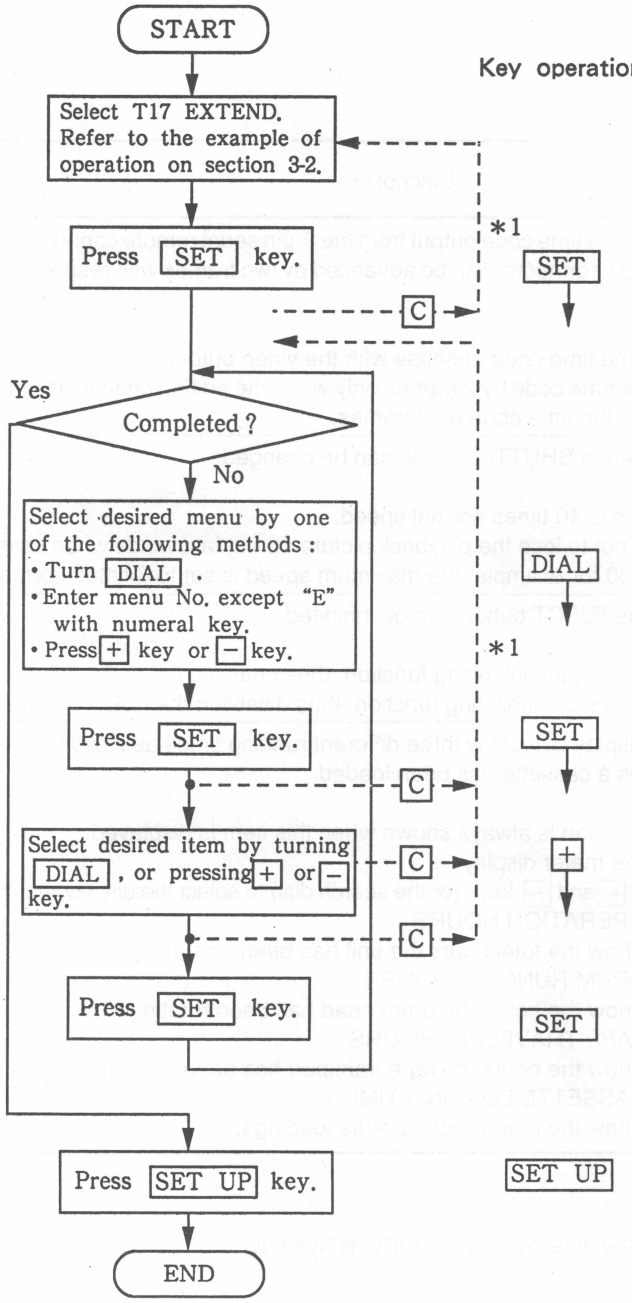

Key operation

Display

Key operation	Display
	T17. MAINTENANCE OFF EXTEND
SET	E01. TAPE/EE AT REC INHI TAPE
DIAL	E03. AUTO SHUT OFF BUZZER DISABLE
SET	E03. AUTO SHUT OFF BUZZER DISABLE DISABLE
+	E03. AUTO SHUT OFF BUZZER DISABLE ENABLE
SET	E03. AUTO SHUT OFF BUZZER ENABLE
SET UP	(Returns to usual display.)

*1 . The broken lines indicate how the C key will retrace one step. This will not work, however, once the step has been committed with the SET key.

3-4. NOVRAM DATA

When NOVRAM data is lost by accident, refer to Section 3-6,
Loading servo parameter data from backup area to read-out data at the shipment so that initial condition is available.
(This is valid for the ROM version V110 and above.)

NOTE: There are a few cases the NOVRAM data is changed according to version up.

Address	Word Data	Byte Data	Description
D080	*		Capstan FG Phase-B Pulse Duty
D082	*		Capstan FG Phase-A Pulse Duty
D084	*		Supply Reel FG Phase-B Pulse Duty
D086	*		Supply Reel FG Phase-A Pulse Duty
D088	*		Take-up Reel FG Phase-B Pulse Duty
D08A	*		Take-up Reel FG Phase-A Pulse Duty
D08E		*	Supply Reel Motor Torque
D08F		*	Take-up Reel Motor Torque
D090	*		Tape Tension Sensor Amp Offset
D092		*	Tape Tension Sensor Amp Gain
D093		*	Supply Reel Amp Offset
D095		*	Take-up Reel Amp Offset
D097		*	Drum Speed Servo FG Error Correction
D098	*		Drum PG Phase at Record Mode
D09A	*		Drum PG Phase at Playback Mode
D09C	*		Drum Speed Servo Reference
D09E	*		Capstan Speed Servo Reference
D0A0		*	Threading Ling Unload Park Position
D0A1		*	Threading Ling Load Park Position
D0A2	*		Drum RF Switching Pulse Phase
D0A4	*		Capstan CTL Lock Phase at Record Mode
D0A6	*		Capstan CTL Lock Phase at Playback Mode
D0A8	*		Chassis Serial Number
D0AA	*		RF Level Meter Display Level
D0AC	*		Play Mode Tape Tension Servo Reference
D0AE	*		Threading Motor Drive Current Sense Threshold
D100	*		Supply Reel Forward Torque Offset
D102	*		Supply Reel Reverse Torque Offset
D104	*		Take-up Reel Forward Torque Offset
D106	*		Take-up Reel Reverse Torque Offset
D108	*		Record Tape Speed Servo Reference
D10A	*		Record Tape Speed Servo Initial Offset

(Word Data = Double Byte Data, Byte Data = Single Byte Data)

3-5. SAVING AND RECALLING SET-UP DATA

HDV-10 uses PROM and non-volatile RAM (NOVRAM) to hold both the initial settings and user settings. The saved settings can be loaded into set-up RAM at any time, so you can return easily to the initial settings, or the saved settings.
In the following description, the three sets of user values saved in non-volatile RAM are referred to as NOVRAM1, NOVRAM2 and NOVRAM3.

NOTE:
The items S03 WFM SELECT and S12 REF SELECT cannot be saved.

Saving set-up data

From the initial set-up menu you can save the set-up data as a user standard selection .
Refer to "Procedure for saving set-up data" on page 3-21.

NOTE:
If the IF-241 board is replaced, the non-volatile RAM settings will be lost.

Recalling set-up data

From the operation mode selection menu, you can retrieve either the initial factory settings held in PROM or any of the three sets of user-saved settings.
Refer to "Procedure for recalling set-up data" on page 3-22.

Procedure for saving set-up data

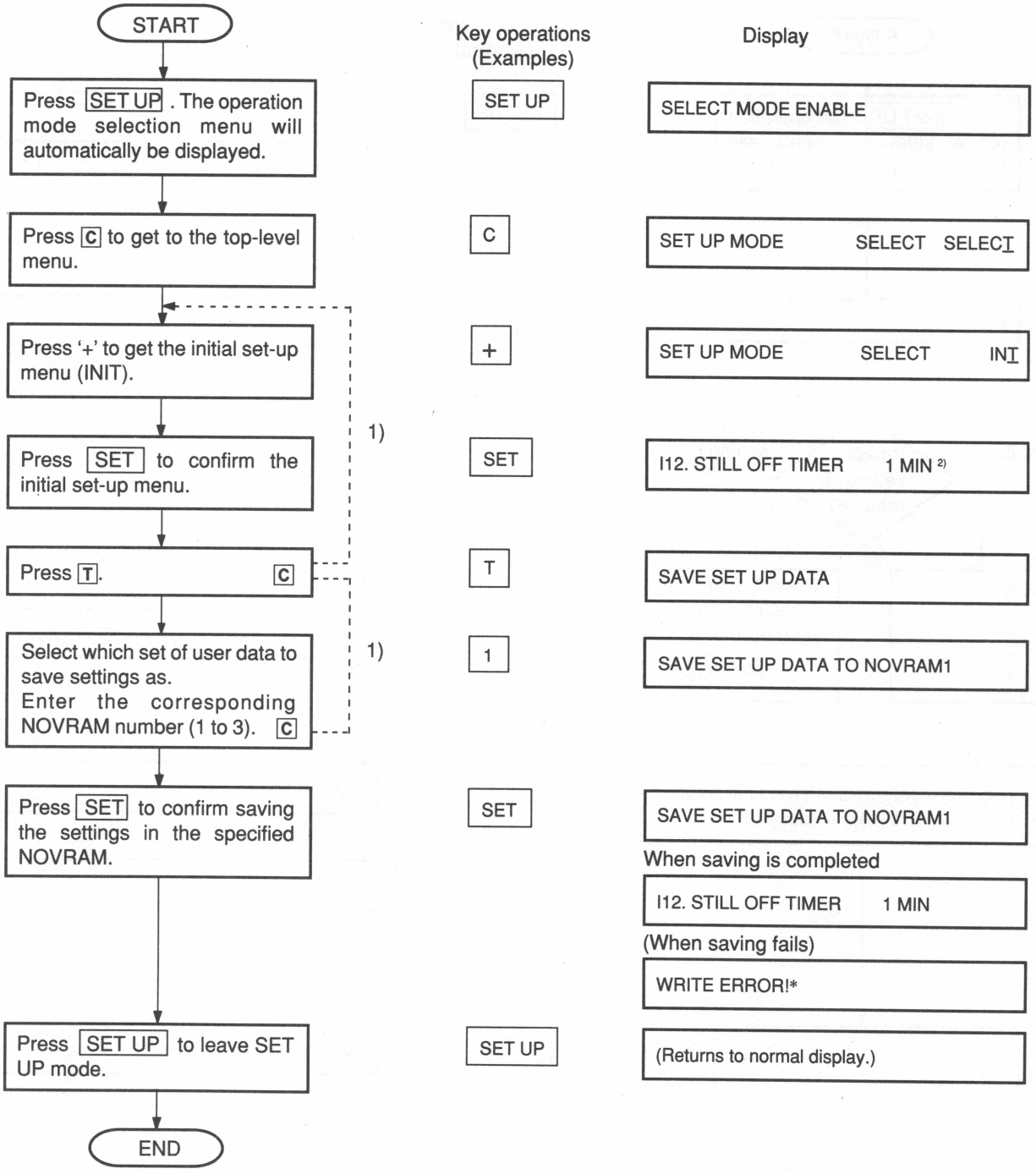

*1 The broken lines indicate how the C key will retrace one step. This will not work, however, once the step has been committed with the SET key.

*2 This shows the previously selected item.

*Error message "WRITE ERROR!"
This means that the current settings (held in volatile RAM) could not be written to the non-volatile RAM.
If this message occurs, first press C to go back one step, and retry saving.
If the write still fails, there is probably a fault in the system; refer to your Sony service representative.

Procedure for recalling set-up data

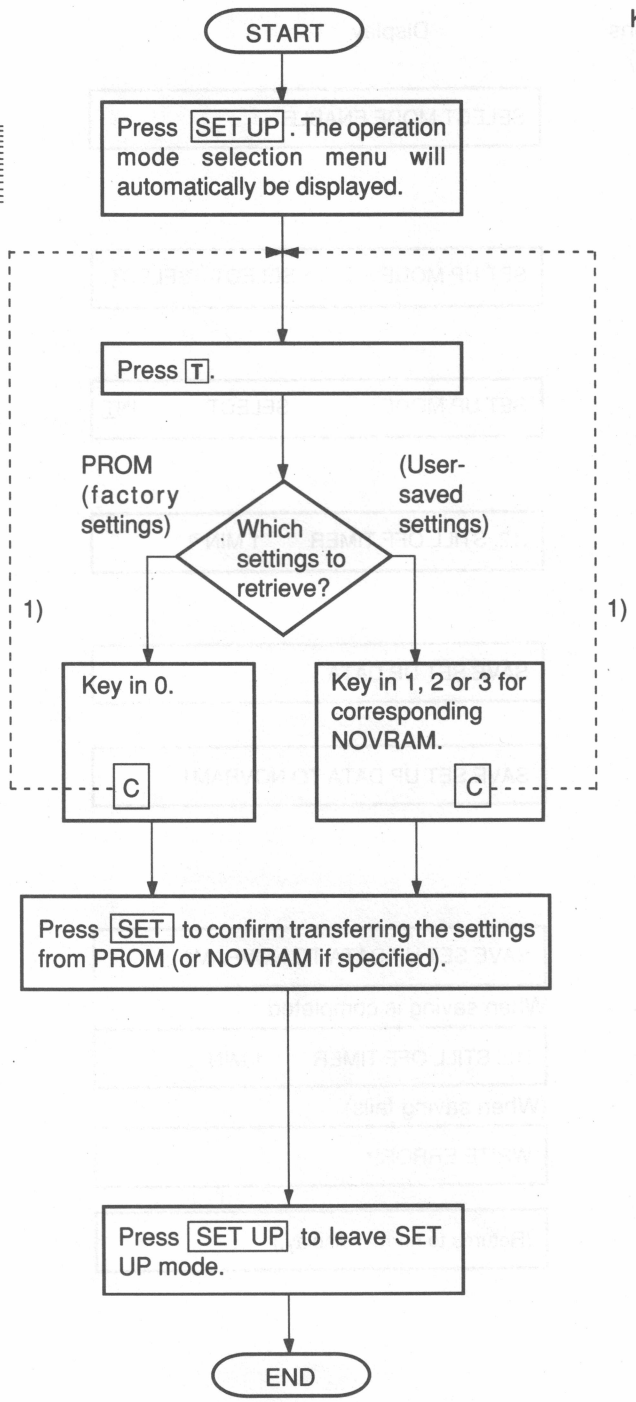

Key operations (Examples)	Display
SET UP	SELECT MODE ENABLE
T	RESTORE SET UP DATA
0	RESTORE SET UP DATA FROM PROM
SET	SELECT MODE ENABLE (When the transfer fails) READ ERROR!*
SET UP	(Returns to normal display.)

* The broken lines indicate how the C key will retrace one step.

*Error message "READ ERROR!"
This means that the settings could not be read from the non-volatile RAM.
If this message occurs, check that the unit is not malfunctioning. Press C to go back to the operation mode selection menu, and use the procedure on the previous page to save the current settings in NOVRAM, then check again that they can be retrieved.

3-6. LOADING SERVO PARAMETER DATA FROM BACKUP AREA

When NOVRAM data is lost by accident, load data at the shipment so that initial condition is available.

1. Select C191 in test menu, T17 MAINTENANCE-TTP ADJ.

   How to operate: 1) Press [SET UP] key, "SET UP" flashes.
   2) Press [C], [-] , and [SET] keys in order.
   3) Press [1],[7], and [SET] keys in order.
   4) Press [+] key to select TTP ADJ, and press [SET] key.
      Then, "TTP ADJ" appears.
   5) Press [C],[1],[9],[1], and [SET] keys in order.

   The control panel display changes as follows:

BACKUP DATA LOAD OK?

2. Press [F] and white [IN] keys at the same time, so that [Y] is input.
   Press [SET] key to load backup data into memory.
   The control panel display changes as follows:

BACKUP DATA LOADED

   Execute C99 in test menu, T17 MAINTENANCE-TTP ADJ to save the backup data into ordinary area.

SECTION 4
FIXTURES AND MEASURING INSTRUMENTS

4-1. Fixtures

The necessary tools for inspection and part replacement of HDV-10 are shown below.

Extension Board EX-211 (One board is provided.)
Sony Part No. A-6026-144-A
Used to inspect or repair the following boards:
ADA-14, DEC-50, IPR-1, SG-169
TBC-14, and TBC-15 boards

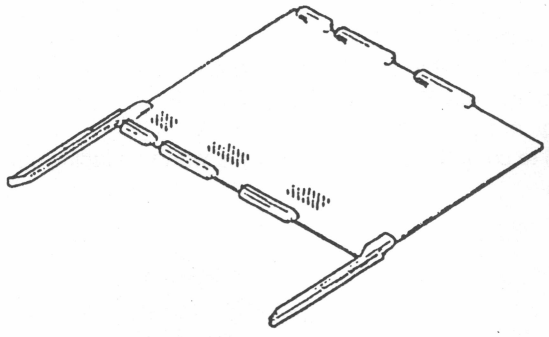

Extension Board EX-212 (One board is provided.)
Sony Part No. A-6026-145-A
Used to inspect or repair the following boards:
DM-77, IV-23, and MD-55 boards

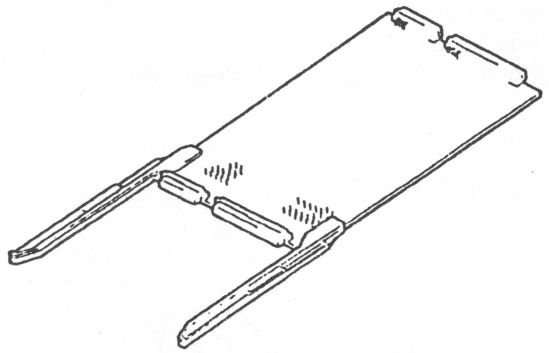

Extension Board EX-213 (One board is provided.)
Sony Part No. A-6026-146-A
Used to inspect or repair the following boards:
AE-08, ED-23, ENC-12, SV-116, and SY-144 boards

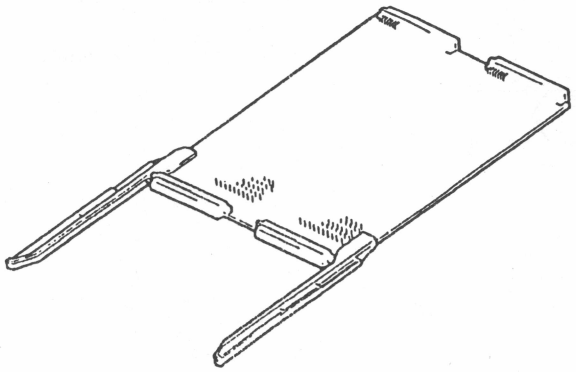

Extension Board EX-284 for IO Board
Sony Part No. J-6268-100-A
Used to replace or adjust IO-44 or IO-53 board.

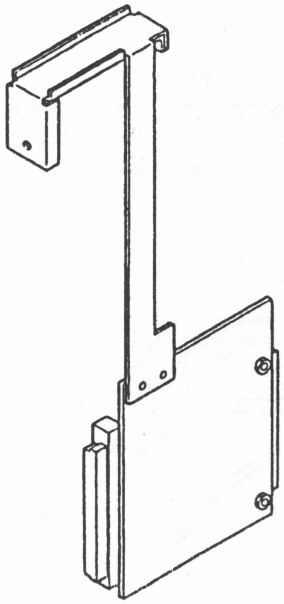

Cleaning Piece
Sony Part No. 2-034-697-00
Used to clean the drum assembly and fixed head.

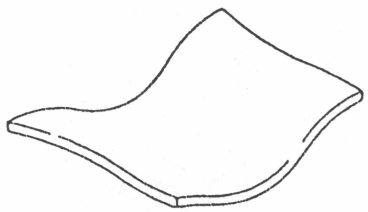

Cleaning Liquid
Sony Part No. 9-919-573-01

Sony Grease SGL-505 (20g)
Sony Part No. 7-662-010-04

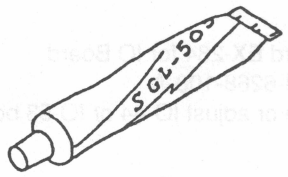

Reference Plate
Sony Part No. J-6255-830-A
Serves as the most reference surface when adjusting the TTP assembly. Used to adjust the reel table height and tension regulator guide slantness.

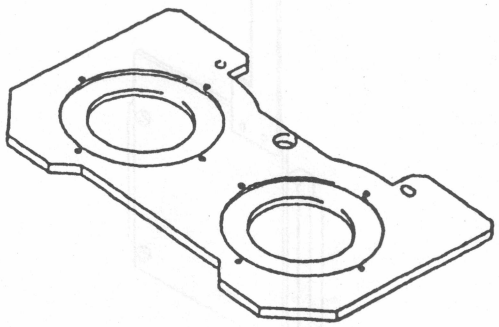

Reel Table Height Gauge
Sony Part No. J-6256-230-A
Used to check whether the reel table is a standard height or not when a reel motor or a reel table replaced.

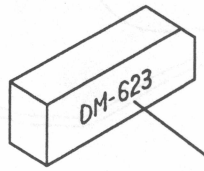

Engraved "DM-623"

Tension Regulator Slantness Adjustment Tool
Sony Part No. J-6256-340-A
Used to adjust the slantness and to readjust the tape pass when the tension regulator is replaced.

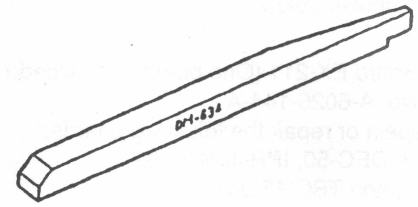

Torque Driver
6 kg/cm Sony Part No. J-6252-510-A
12 kg/cm Sony Part No. J-6252-520-A
26 kg/cm Sony Part No. J-6252-530-A
Used to control the tightening torque when replacing upper drum.

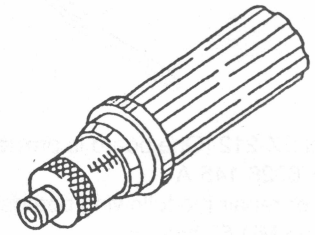

Bits Set for Torque Driver
Sony Part No. J-6252-540-A
Bit set for the above-mentioned torque driver.

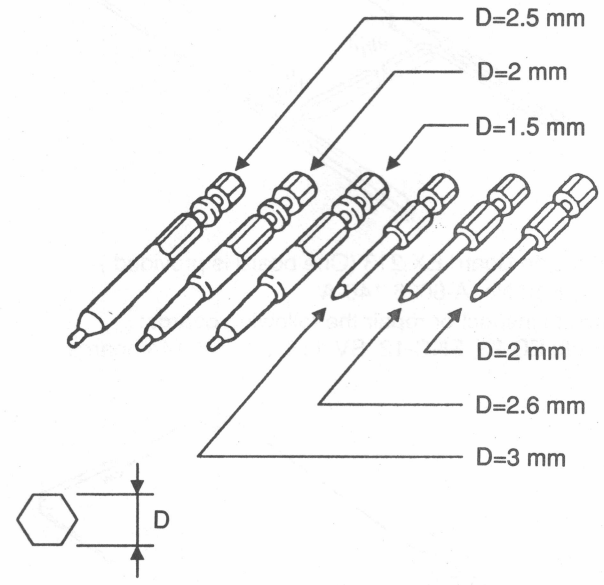

Projection Measurement Tool
Sony Part No. J-6256-010-A
Used to measure the projection of the rotating head and to adjust the eccentricity of the upper drum. To use for HDV-10, a special adapter for measurement is necessary.

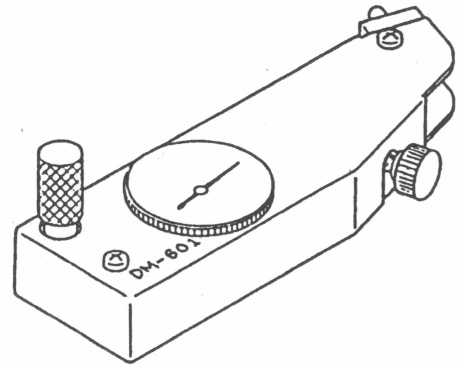

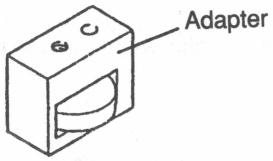

Small Mirror for Adjustment
Sony Part No. J-6080-029-A
Used to check the tape run.

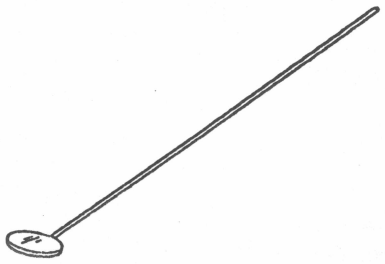

Spare Mirror
Sony Part No. J-6080-030-1
Spare mirror for the small mirror.

Tension Adjustment Tool
Sony Part No. J-6255-910-A
Used to adjust the positions of TR-58 board and tension arm.

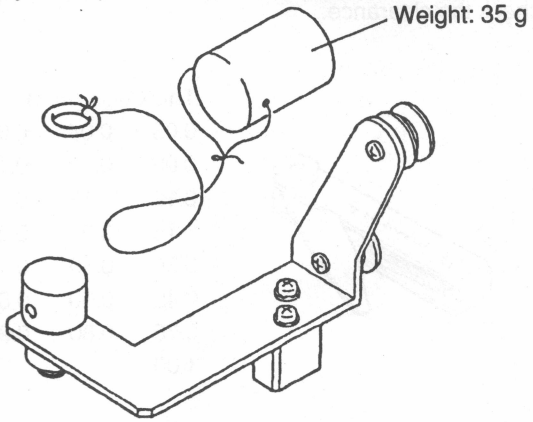

Head Tip Microscope
Sony Part No. J-6252-210-A
Used to check the surface of the rotating head. Refer to the microscope instruction manual for operation method.

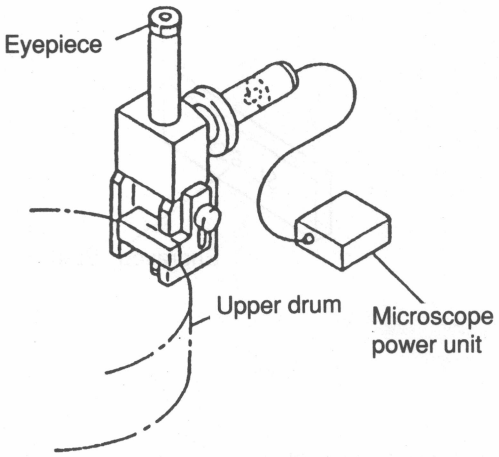

Nut Driver
Sony Part No. 7-700-751-02
Used to adjust the height of the stationary head.

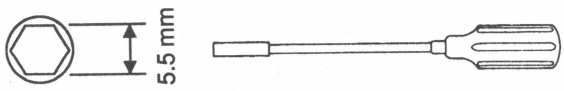

Thickness Gauge
Sony Part No. J-6041-670-A
Used to adjust the positions of mechanical components and to check the clearance.

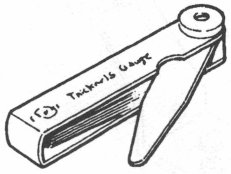

Thickness (mm)

0.03	0.04	0.08
0.09	0.10	0.11
0.12	0.13	0.14
0.15	0.20	0.25
0.30	0.35	0.40
0.45	0.50	0.60
0.75	0.80	0.90
1.00		

Parallel Plate
Sony Part No. J-6086-570-A
Used to check and adjust the warps of the fixed head.

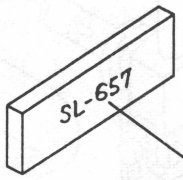

Engraved "SL-657"

Azimuth Adjustment Tool
Sony Part No. J-6256-540-A
Used to adjust the azimuth of the fixed head using the slantness of TG-4 as the reference when the fixed head is replaced.

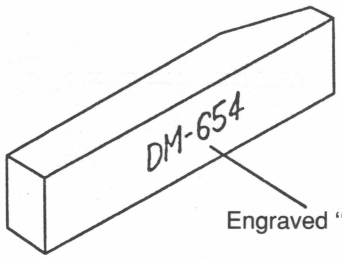

Engraved "SL-654"

Adjustment Driver 1.3 mm (ceramic)
Sony Part No. 7-721-052-81
Used to adjust the volumes on boards.

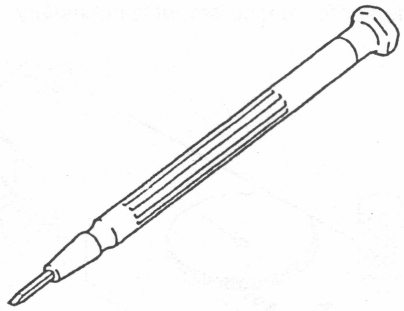

Guide Flange Adjustment Driver
Sony Part. No. J-6256-350-A
When adjusting guide height, this tool can be used to tighten the fastening screw while holding the flange from turning.
It is used when replacing the tension regulator and the tape guide, readjusting the tape pass.

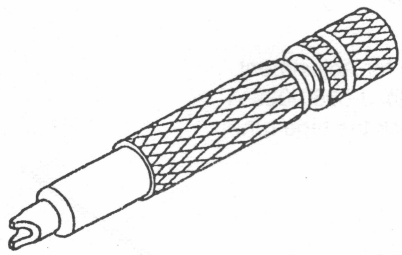

Reel Height Adjustment Tool
Sony Part No. J-6256-500-A

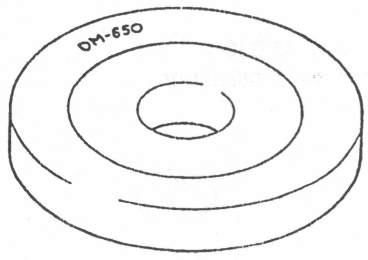

Used with the reference plate to adjust the reel table height when the reel table or the reel motor is replaced.
Although the reel table can be adjusted without using this tool, it makes the task much easier.

Tension Arm Bending Tool
Sony Part No. J-6041-650-A
Used to adjust the slantness of each tape guide arm.

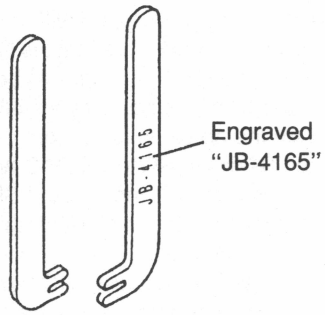

Hexagonal Screwdriver
Sony Part No. J-6153-730-A (1.27 mm diameter)
7-700-766-03 (2.0 mm diameter)
7-700-766-04 (2.5 mm diameter)
7-700-766-05 (3.0 mm diameter)

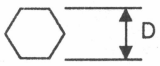

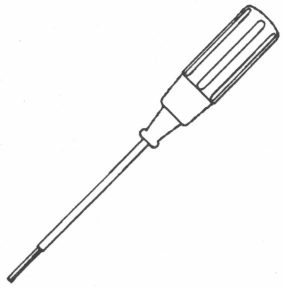

L-Shaped Hexagonal Wrench Set
Sony Part No. 7-700-736-00

D =		
	1.27	3.0
	1.4	4.0
	1.5	5.0
	1.58	6.0
	2.0	8.0
	2.5	10.0

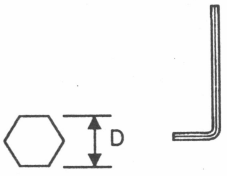

IC Test Clip
Sony Part No. J-6041-770 A (TC-16)
J-6041-780-A (TC-20)
This tool is convenient for placing the probe of oscilloscope on the pins of DIP type ICs when checking or adjusting ICs. TC-16 can be used for 14 pin or 16 pin DIP IC and TC-20 for 18 pin or 20 pin DIP IC.

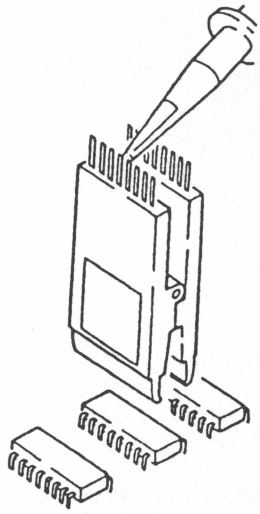

PLCC IC Extraction Tool
Sony Part No. J-6035-070-A
This tool is useful for extracting PLCC type ICs and fits ICs with 20 through 124 pins.

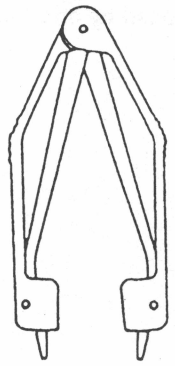

ROVING DAC
Sony Part No. J-6263-470-A

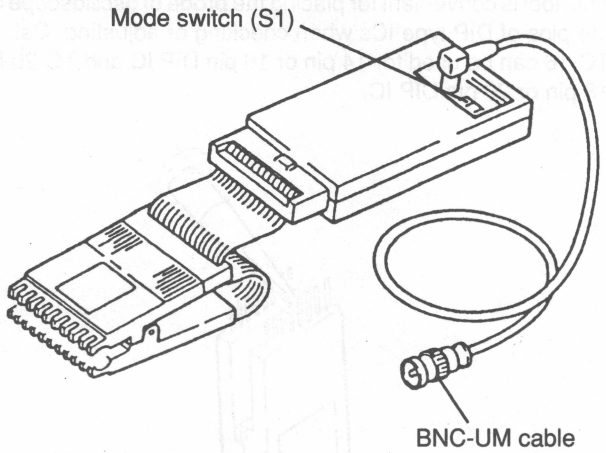

Includes a conversion cable to connect a mini RF plug to a BNC plug (BNC-UM cable: J-6264-360-A, 1 m)

ROVING DAC is used to check and diagnose the failure of digital signal processing circuits. It is attached to such 8-bit D type flip-flop ICs as LS273/573 type (20 pin) to retrieve a desired 8-bit parallel data from the digital circuit, convert the data from digital to analog, then output the data as analog signals. The digital circuit's operation can easily be checked and its failure diagnosed by observing these output signals with an oscilloscope.

Note: When using the ROVING DAC, pay attention to the following points.

- Turn off the power of the measuring instrument before installing or removing the tool.
- Although this tool is equipped with a reverse insertion protection circuit, make sure that the No.1 pin mark of the IC clip matches the No.1 pin of the IC before turning on the power. If the IC clip is correctly installed, the green LED lights when the power is turned on.
- Set switch S1 in the ROVING DAC according to the arrangement of the IC and that of LSB and MSB.
- Do not use this tool for an IC other than those specified as it may cause a failure.
- The cable between the tool and IC clip and that between the unit and oscilloscope should not be pulled with excessive force. Also, do not use excessive force on the connectors.

Circuits Diagram and List of Components

A circuit diagram and a list of components of ROVING DAC are shown below.

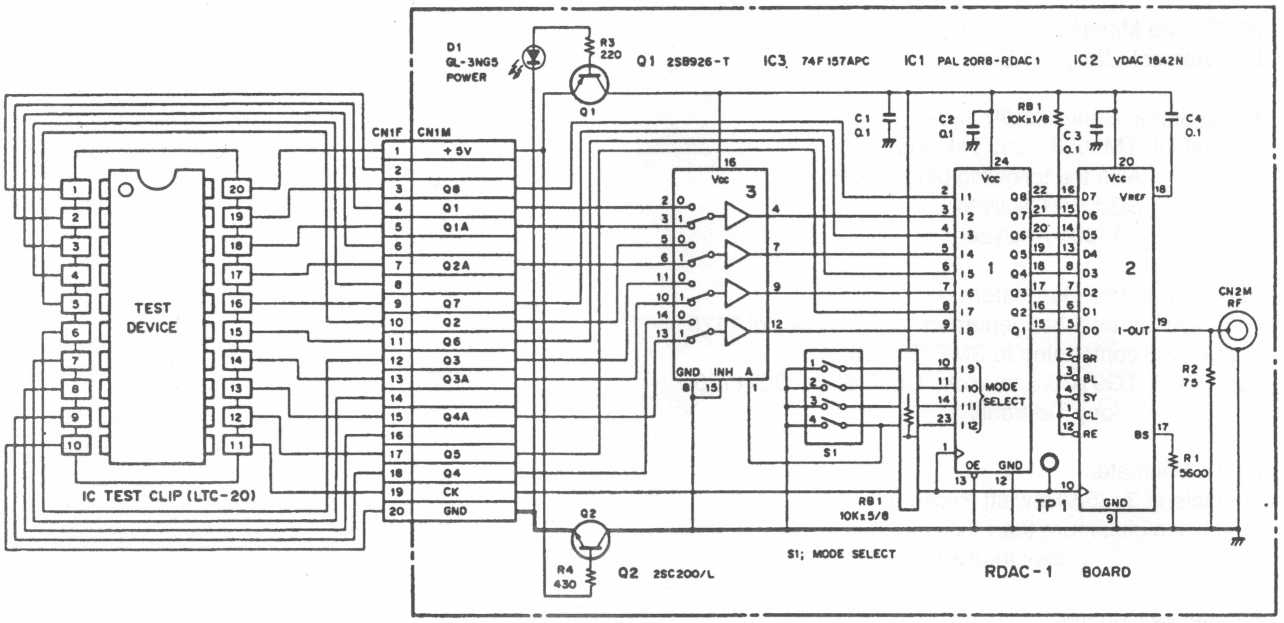

Ref. No. or Qty	Part No.	Description
1pc	J-6263-470-A	ROVING DAC
1pc	————	IC TEST CLIP, LTC-20 Manufacturer : AP PRODUCTS INCORPORATED
1pc	J-6264-360-A	COAXIAL CABLE ASSY, BNC-UM 1m
C1, 2, 3, 4	1-161-485-00	CAP, CERAMIC 0.1 50V
CN1M	1-564-857-11	RECEP, PS 20P, MALE
CN2M	1-561-365-21	RECEP, COAXIAL, MALE
D1	1-719-930-50	DIODE, LED, GL-3NG5 GREEN
IC1	J-6264-370-A	IC, PAL20R8-RDAC1
IC2	————	IC, VDAC1842N : D/A CONVERTER Manufacturer : INTECH
IC3	8-759-938-93	IC, 74F157APC
Q1	8-729-808-18	TRANSISTOR, 2SB926-T
Q2	8-729-100-12	TRANSISTOR, 2SC2001L
R1	1-215-439-00	RES, METAL, 5.6K 1% 1/6W
R2	1-215-394-00	RES, METAL, 75 1% 1/6W
R3	1-215-405-00	RES, METAL, 220 1% 1/6W
R4	1-215-412-00	RES, METAL, 430 1% 1/6W
RB1	1-231-410-00	RESISTOR BLOCK, 10K × 8
S1	1-570-598-11	SWITCH, DIP, 4-CKT

4-2. Measuring Instruments

1. Oscilloscope
   Equivalent: 2455 or 2465/Sony Tektronix
   Frequency band: more than150 MHz

2. HD Picture Monitor
   Equivalent: HDM-1220/Sony

3. Audio Signal Generator/Analyzer
   Equivalent: TM5006/Sony Tektronix
   Also the following plug-in units
   SG5010 Oscillator
   AA5001 Analyzer

4. HD Video Signal Generator
   BTA-S001 or one that generates video signals of 1125 lines/60 Hz conforming to SMPTE240B.
   Equivalent: TG91C6/Shibasoku Co. Ltd. or TSG-1125/ Sony Tektronix

5. Digital Voltmeter
   Equivalent: 3435A/Hewlett Packard
   Effective digits: more than 5 digits
   Precision: 0.02%, less than ±1 count

6. Frequency Counter
   Equivalent: 5313/Hewlett Packard

7. Waveform Monitor
   Equivalent: 1730HD/Sony Techtronics
   (Not necessary, but convenient)

8. Spectrum Analyzer
   Equivalent: 141T/Hewlett Packard
   (Do not make adjustments without this instrument.)

9. SLIDAC
   Equivalent: SD-2410B/Matsunaga
   Input /Output voltage: 0–240V AC
   Current capacity: 2 kVA/10A
   (Do not make adjustments without this instrument.)

10. TENTELOMETER
    Model: T_2-H_7-CB

TENTEL and TENTELOMETER are registered trademark of TENTEL Corp., Campbell, CA U.S.A.

4-3. Alignment Tape GR2-1, GR5-1

The GR2-1 alignment tape is for mechanical adjustments.
The GR5-1 alignment tape is for electrical adjustments.

GR2-1 (Sony Part No. 8-960-040-11)

TIME CODE min. sec	CUE	PCM (1-4 CH) / VIDEO CONTENTS	FOR USE	TAPE FORMAT
0:00	10KHz 0VU	19.0MHz All CH REC	DRUM PB HEADS PAIRING CHECK	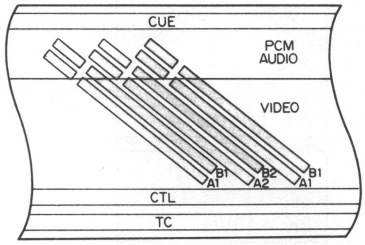
10 : 00	10KHz 0VU	19.0MHz A CH REC	ADJUSTMENTS • LINEARITY • CTL PHASE • PG PHASE • DRUM PB HEAD TRACKING • TAPE SPEED • STATIONARY HEAD HEIGHT	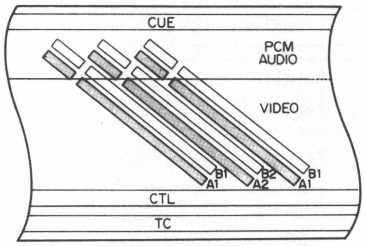
45 : 00	10KHz 0VU	19.0MHz All CH REC	DRUM PB HEADS PAIRING CHECK	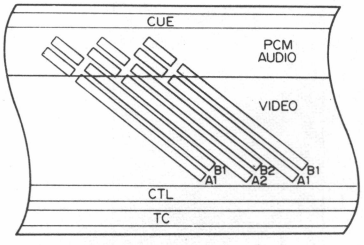
55 : 00	BLANK			

GR5-1 (Sony Part No. 8-960-040-02)

TIME CODE min. sec	CUE	PCM (1-4 CH)		VIDEO	
		CONTENTS	FOR USE	CONTENTS	FOR USE
0 : 00				BLACK	
2 : 55	1KHz, 0VU	1KHz, 0VU	ADJUSTMENTS • CUE PB LEVEL • CUE PB FREQUENCY RESPONSE • CTL PB LEVEL • TIME CODE PB LEVEL • PCM AUDIO EQUALIZER	COLOR BARS	VIDEO SYSTEM GENERAL MOVEMENTS CHECK • S/N (MONITOR) • V LOCK (MONITOR) • HEAD CLOGGING (WFM-RF) • DROPOUT CORRECT (MONITOR) • TBC MOVEMENT (MONITOR) • H JITTER (MONITOR)
3 : 00					
3 : 55	1KHz, – 10VU				
4 : 00					
5 : 25	10KHz, – 10VU				
5 : 30					
5 : 55	1KHz, – 10VU				
6 : 00					
6 : 25	100Hz, – 10VU				
6 : 30					
6 : 55	200Hz, – 10VU				
7 : 00					
7 : 25	300Hz, – 10VU				
7 : 30					
7 : 55	500Hz, – 10VU				
8 : 00					
8 : 25	3K, – 10VU				
8 : 30					
8 : 55	5K, – 10VU				
9 : 00					
9 : 25	7.5K, – 10VU				
9 : 30					
9 : 55	10K, – 10VU				
10 : 00					
12 : 55	1KHz, 0VU	1KHz, 0VU	ADJUSTMENTS • CUE PB LEVEL • CUE PB FREQUENCY RESPONSE • CTL PB LEVEL • TIME CODE PB LEVEL • PCM AUDIO EQUALIZER	19MHz CARRIER [FM CENTER FREQUENCY]	ADJUSTMENTS • RF METER • RF PLAYBACK LEVEL
13 : 00					
13 : 55	1KHz, – 10VU				
14 : 00					
15 : 25	10KHz, – 10VU				
15 : 30					
15 : 55	1KHz, – 10VU				
16 : 00					
16 : 25	100Hz, – 10VU				
16 : 30					
16 : 55	200Hz, – 10VU				
17 : 00					
17 : 25	300Hz, – 10VU				
17 : 30					
17 : 55	500Hz, – 10VU				
18 : 00					
18 : 25	3K, – 10VU				
18 : 30					
18 : 55	5K, – 10VU				
19 : 00					
19 : 25	7.5K, – 10VU				
19 : 30					
19 :55	10K, – 10VU				
				FIELD SWEEP	• RF PLAYBACK EQUALIZER ADJUSTMENT • OVER MODULATION (Head Life) (MONITOR, WFM)
30 : 00				*MONO SCOPE	VELOERROR CORRECTION ADJUSTMENTS
40 : 00				*BLACK (WITH CHARACTOR)	ATC CHECK
42 : 00	BLANK	BLANK		BLANK	(REC CURRENT ADJ.)

NOTE: ▒▒ Shaded parts indicate no sound. (MONITOR) indicates eye-check using the picture monitor.
*means the specifications are applied to the end -02 of the part number.

SECTION 5
INSPECTION AND MAINTENANCE

Perform the periodic checks and maintenance in order to ensure proper function and undimished performance and also to extend the life of the tape and unit.

Perform the following maintenance before using the unit.
- **Clean the tape running surfaces and slider running surfaces. (Refer to Section 6-1.)**

5-1. PERIODIC INSPECTION ITEMS

- The table at right shows the schedule for periodically inspection of the main parts. The times shown in the table are not the guaranteed lives of the parts.
  The greasing, check and replacement periods depend on the conditions of use, so refer to this table when making a maintenance and inspection plan.
- The hours shown in the table are based on the Drum Running Hours. For details, refer to the Test Mode Menu 1-4-6, on the operation manual.
- If the specified parts are unclear, refer to the appropriate sections on the maintenance manual (as the disassembly diagram pages are shown in the table).
- For periodic checks after 6000 hours, follow the same schedule as shown in the table.

Note: The symbol "↑" means that the part must be automatically replaced when the part shown in the previous column has been replaced.

- It is recommended that the following servo system components (moving parts) be tested after replacing periodic replacement parts.
  Drum block See 12-3.
  Capstan motor See 12-4.
  S-reel motor See 12-5.
  T-reel motor See 12-6.
  Plunger solenoid See 12-7.
  Loading motor See 12-8.

○: Cleaning □: Greasing △: Check (Adjustment) ☆: Replacement

Name of block or part	Part No.	Disassembly diagram page	Periodic check hours							Remarks
			Every 500 h	1000 h	2000 h	3000 h	4000 h	5000 h	6000 h	
Drum block										
Drum ass'y (DHH-02A-R)	A-6050-739-	22-24	○/△	△	△	△	△	△	☆	• Check in accordance with Section 6-3, Tracking Check. • Replace in accordance with Section 7-3, Drum ass'y replacement.
Upper drum ass'y (DHR-02-R)	A-6052-131-	22-24	○/△						↑(Note 1)	• Following checks should be performed. 6-3. Tracking check. 6-4. Head projection check. When the video head protrudes less than 18 µm, we recommend that the head be replaced. • Replace in accordance with Section 7-2, Upper drum ass'y replacement
Brush ass'y (RP)	A-6050-743-	22-24		☆	☆	☆	☆	☆	↑(Note1)	• Replace in accordance with Section 7-4, Brush slip ring block replacement.
Slip ring ass'y (12)	A-6050-770-	22-24		☆	☆	☆	☆	☆	↑(Note1)	
S/T reel table block										
Reel table ass'y	X-3615-103-	22-18		△	△	○/△	△	△	△	• Check that the tape is running properly. • Replace in accordance with Section 7-9, Reel table block replacement.
Reel brake ass'y	A-6041-036-	22-18		△	△	○/△	△	☆	△	• Check the reel brake ass'y function. • Replace in accordance with Section 7-9, Reel table block replacement.
Plunger solenoid	1-454-337-00	22-18		△	△	△	△	↑(Note1)	△	
Brake ass'y	A-6741-066-	22-18		△	△	△	△	↑(Note1)	△	
Reel motor (SRV-0101A)	8-835-413-01	22-18				△			☆	• Check whether the reel motor is rotating properly. • Replace in accordance with Section 7-9, Reel table block replacement. Both S and T side motors must be replaced simultaneously.
Tape guide block										
Roller guide ass'y (Tension regulator guide)	X-3165-108-	22-22	○	△	△	△	△	△	☆	• Perform the following checks. Tape transport check 6-3. Tracking check • Replace in accordance with the following procedures. 7-10. Tension regulator block replacement 7-11. Tape guide 0 ass'y replacement 7-12. Tape guide 1 ass'y replacement 7-13. Tape guide 2 ass'y replacement 7-14. Tape guide 3 ass'y replacement 7-15. Tape guide 4 ass'y replacement 7-17. Tape guide 5 ass'y replacement 7-18. Loading ring block replacement
Roller guide ass'y (Tape guide 0)	X-3165-108-	22-22	○	△	△	△	△	△	☆	
Roller guide ass'y (Tape guide 1)	X-3165-108-	22-22	○	△	△	△	△	△	☆	
Roller guide ass'y (Tape guide 2)	X-3165-108-	22-22	○	△	△	△	△	△	☆	
Roller guide ass'y (Tape guide 3)	X-3165-108-	22-22	○	△	△	△	△	△	☆	
Roller guide ass'y (Tape guide 4)	X-3165-108-	22-22	○	△	△	△	△	△	☆	
Roller guide ass'y (Tape guide 5)	X-3165-108-	22-22	○	△	△	△	△	△	☆	
Roller guide ass'y (Ring guide 1)	X-3165-108-	22-24	○	△	△	△	△	△	☆	
Roller guide ass'y (Ring guide 2)	X-3165-108-	22-24	○	△	△	△	△	△	☆	
Roller guide ass'y (Ring guide 3)	X-3165-108-	22-24	○	△	△	△	△	△	☆	
Roller guide ass'y (Ring guide 4)	X-3165-108-	22-24	○	△	△	△	△	△	☆	
Loading ring ass'y	A-6049-062-	22-24								• Replace in accordance with the following procedures. 7-5. Cleaning roller ass'y replacement 7-6. Pinch roller ass'y replacement 7-18. Loading ring block replacement
Pinch roller ass'y	X-3717-215-	22-24		☆	☆	☆	☆	☆	☆	
Cleaning roller ass'y	X-4907-101-	22-24		☆	☆	☆	☆	☆	☆	

○: Cleaning □: Greasing △: Check (Adjustment) ☆: Replacement

Name of block or part	Part No.	Disassembly diagram page	Periodic check hours							Remarks
			Every 500 h	1000 h	2000 h	3000 h	4000 h	5000 h	6000 h	
Cassette compartment ass'y	A-6028-028-	22-16	○	△	△	□/△	△	△	□/△	
Cassette compartment motor (MCB2B15)	8-835-179-01	22-16		△	△	△	△	△	☆	For the cassette compartment motor drive • Apply grease to the roller guide grooves on the left and right plates. • Check the operation. • Replace in accordance with Section 7-8, Replacement of cassette compartment component part.
Loading drive gear ass'y	A-6049-079-	22-26		△	△	□/△	△	△	□/△	• Apply grease to the meshing portions of the gears. • Check the operation. • Replace in accordance with Section 7-19, Loading drive gear block.
Loading motor (MCB2B15)	8-835-179-01	22-26		△	△	△	△	△	☆	
Pinch roller pressing ass'y	A-6749-117-	22-20		△	△	△	△	☆	△	• Check the operation. • Replace in accordance with Section 7-20, Pinch roller press ass'y.
Capstan motor (BHF-1918A)	8-835-259-02	22-20		△	△	☆	△	△	☆	• Check that the tape is running properly. • Replace in accordance with Section 7-21, Capstan motor replacement.
Fixed head sub-ass'y	A-6036-094-	22-20				△			☆	• Check the characteristics of each head for TC, CTL and CUE. • Replace in accordance with Section 7-22, Fixed head ass'y replacement.
Head cleaner	3-175-018-	22-20		☆	☆	☆	☆	☆	☆	• Replace in accordance with Section 7-24, Replacement of Fixed head cleaner ass'y.
Fan motor block										
Rear panel fan motor (CF120-H302N1D)	1-541-834-11	22-12		○/△	△	△	△	△	☆	• Check that the fan motors are rotating properly.
Power supply panel fan motor (CF120-H201N1D)	1-541-835-11	22-14		○/△	△	△	△	△	☆	
Bottom panel fan motor (CF120-H201N1D)	1-541-835-11	22- 6		○/△	△	△	△	△	☆	
Built-in batteries										
Lithium battery (SY-144 board)	1-528-229-11	22- 6				☆			☆	• Replace in accordance with Section 2-12-4, Replacement Procedure of Backup Battery.
Lithium battery (IF-241 board)	1-528-218-11	22-12						☆		

SECTION 6
PERIODIC CHECK AND MAINTENANCE

6-1. CLEANING

6-1-1. Basic Knowledge before Cleaning

1. Clean the following positions (Fig. 6-1-1).
   The thing worthy of note for cleaning is described in detail in the following sections.
   - 6-1-2. Rotary Head and Upper Drum Tape Transport Surface
   - 6-1-3. Drum Lead Surface and Lower Drum Tape Transport Surface
   - 6-1-4. Tape Guide
   - 6-1-5. Stationary Head
   - 6-1-6. Cassette Compartment
   - 6-1-7. Reel Table and Positioning Pins
   - 6-1-8. Fan Motor

2. Prepare the following tools for cleaning.
   - Cleaning Piece
     Sony Part No.: 2–034–697–00
   - Cleaning Fluid (20 cc)
     Sony Part No.: 9–919–573–00

   Use cleaning fluid or an equivalent if it is hard to procure above mentioned cleaning fluid.
   - Cloth (or Gauze)
   - Skewer or the equivalent. (Never use a metallic stick.)
   - Nylon Brush or the equivalent. (Never use a metallic brush.)
   - Cleaner (A domestic vacuum cleaner can be used.)

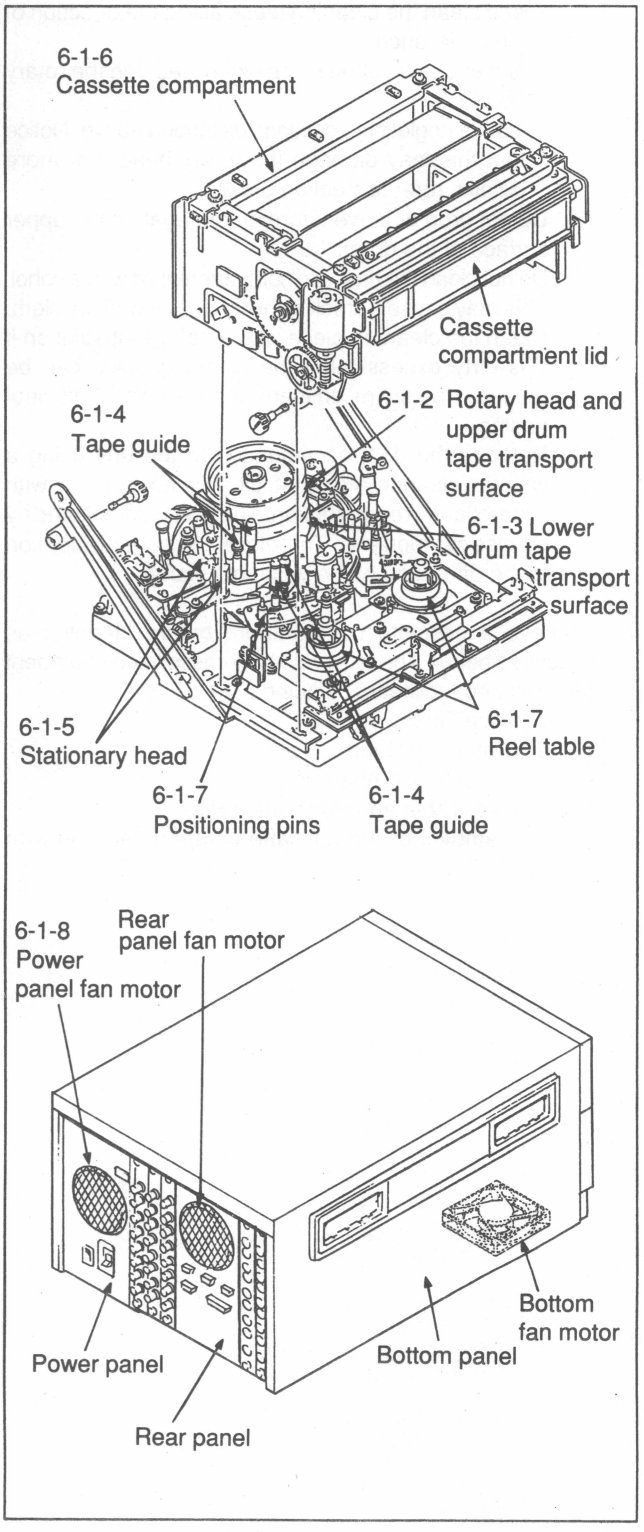

Fig. 6-1-1 Clean the following positions

3. Pay attention to the following during cleaning.
   (1) Turn the power off before cleaning.
   (2) When performing the cleaning of a rotary head
   - Press a cleaning piece slightly against the rotary head.
   - Be sure to rotate the upper drum counterclockwise and clean the cleaning piece along the direction of circumference.
   - Never use a cotton swab when cleaning the rotary head.

   Do not neglect the cautions described above. Notice that this may damage the rotary head. For more details, refer to Section 6-1-2.
   (3) Do not drop or leave a foreign material on the upper surface of the drum.
   (4) Do not clean the cassette compartment lid with alcohol. This may cause a crack in the lid. Clean with dry cloth.
   (5) Clean the cleaning piece with a detergent solution if it is dirty excessively. The cleaning piece can be reused if the stains on it are removed after sufficient rinsing.
   (6) Remove the dust accumulated in the unit using a vacuum cleaner. After that, clean in accordance with instructions in each section. This unit is constituted by precise components. Therefore, pay careful attention to the operation of the vacuum cleaner.

4. Remove a cassette compartment before cleaning as described below. The removal of the cassette compartment secures and facilitates cleaning.
   6-1-4. Tape Guide
   6-1-5. Stationary Head
   6-1-6. Cassette Compartment
   6-1-7. Reel Table and Positioning Pins
   For the removal of the cassette compartment, refer to Section 2-7-1.

6-1-2. Rotary Head and Upper Drum Tape Transport Surface

Prepare the following tools for cleaning.
- Cleaning Piece
  Sony Part No.: 2–034–697–00
- Cleaning Fluid (or an equivalent)
  Sony Part No.: 9–919–573–00

Cleaning

1. Turn the power off.
2. Moisture a cleaning piece with cleaning fluid.
3. Press the cleaning piece slightly against a rotary head and the side surface of an upper drum.
4. Clean the cleaning piece along the direction of circumference two or three times while rotating the upper drum slowly counterclockwise. Repeat cleaning until stains are removed.
5. Wipe the surface cleaned using the cleaning piece two or three times with dry cloth.

> Be sure to perform cleaning during periodic inspection (for every 500 hours). It is recommended to clean the rotary head every week.

NOTE 1: Never rotate the upper drum clockwise or never move the cleaning piece in the vertical direction when cleaning the rotary head. This may damage the rotary head. Rotate the upper drum slowly counterclockwise and clean the cleaning piece along the direction of circumference.

NOTE 2: Never use a cotton swab when cleaning the rotary head.

NOTE 3: Never drop or leave a foreign material on the upper surface of the drum. The upper surface of the upper drum is the RF signal preamplifier block (DR-90 board). Be careful not to drop a foreign material on the upper surface.

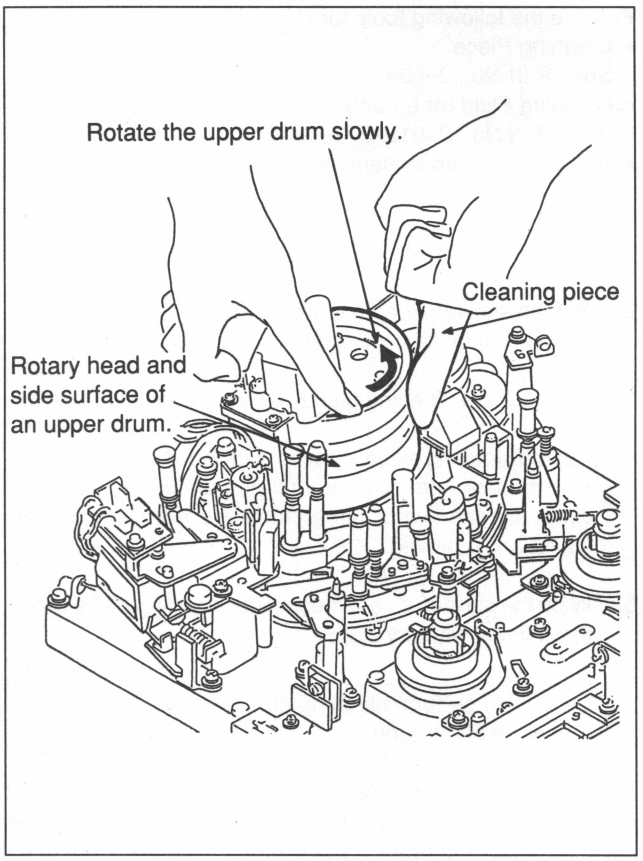

Fig. 6-1-2 Rotary Head/Upper Drum Tape Transport Surface Cleaning

6-1-3. Drum Lead Surface and Lower Drum Tape Transport Surface

Prepare the following tools for cleaning.

- Cleaning Piece
  Sony Part No.: 2–034–697–00
- Cleaning Fluid (or an equivalent)
  Sony Part No.: 9–919–573–00
- Skewer (or an equivalent. Never use a metallic stick.)

Cleaning

1. Turn the power off.

2. Put the skewer along the drum lead surface as shown in Fig. 6-1-3 and remove the magnetic powder.

3. Moisture the cleaning piece with cleaning fluid.

4. Put the cleaning piece shown in Fig. 6-1-4 along the drum lead surface and lower drum tape transport surface and clean surface two or three times. Repeat cleaning until stains are removed.

5. Wipe the surface cleaned using the cleaning piece two or three times with dry cloth.

Be sure to perform cleaning during periodic inspection (every for 500 hours).

NOTE 1: The magnetic powder attached on the drum lead surface may exert a bad influence on the tape transport (tracking). Perform inspection more often according to the operating environment as well as periodic inspection and perform cleaning.

NOTE 2: Never use a metallic stick instead of the skewer. This may damage the tape transport surface.

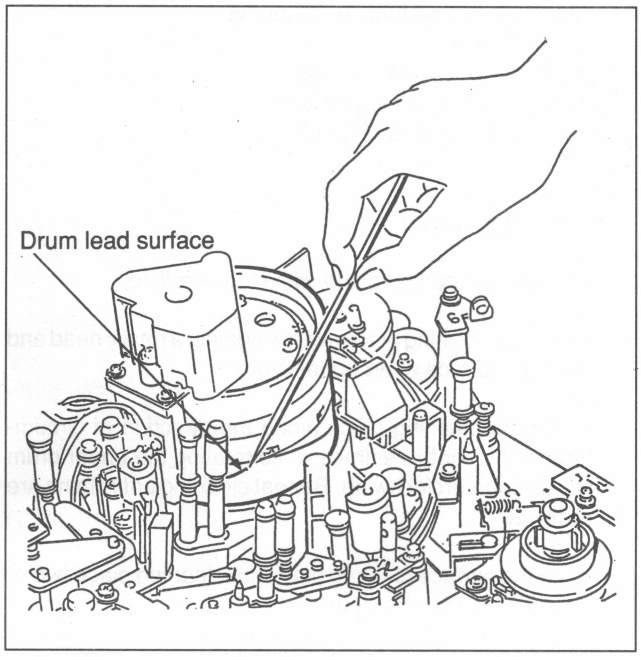

Fig. 6-1-3 Drum Lead Surface Cleaning

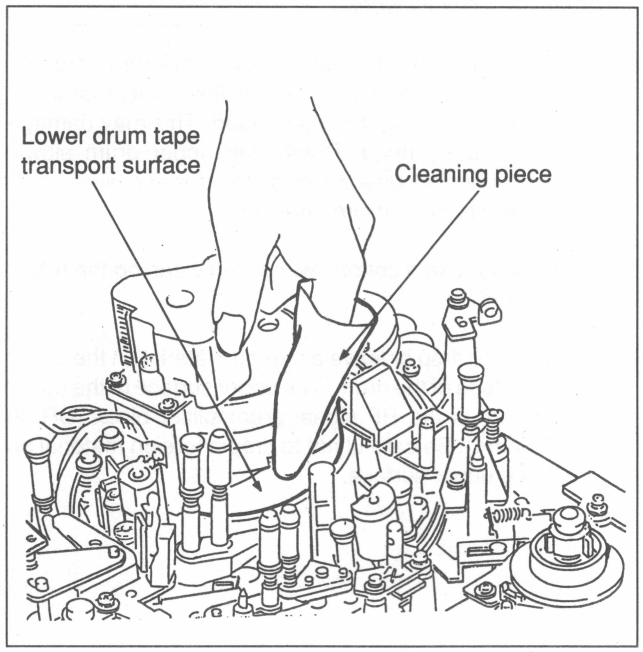

Fig. 6-1-4 Lower Drum Tape Transport Surface Cleaning

6-1-4. Tape Guide

Prepare the following tools for cleaning.
- Cleaning Piece
  Sony Part No.: 2–034–697–00
- Cleaning Fluid (or an equivalent)
  Sony Part No.: 9–919–573–00

Cleaning

1. Turn the power off.
2. Moisture the cleaning piece with cleaning fluid.
3. Press the cleaning piece slightly against the tape transport surface of each tape guide (including a capstan shaft and pinch roller) and the upper/lower guide flange surface and clean the surface two or three times. Repeat cleaning until stains are removed.
4. Wipe the surface cleaned using the cleaning piece two or three times with dry cloth.

Be sure to perform cleaning during periodic inspection (every for 500 hours).

NOTE 1: The magnetic powder attached to the tape guide may exert a bad influence on the tape (damage on tape and picture deterioration). Perform inspection more often according to the operating environment as well as periodic inspection and perform cleaning.

NOTE 2: The tape guide is constituted by precise components. The height of the tape guide is precisely adjusted by the tape transport adjustment. Be careful not to apply excessive force during cleaning.

NOTE 3: The tape guides of this unit are roller guides except a slant guide. Clean the entire circumference surface of the roller guides while rotating the tape guide.

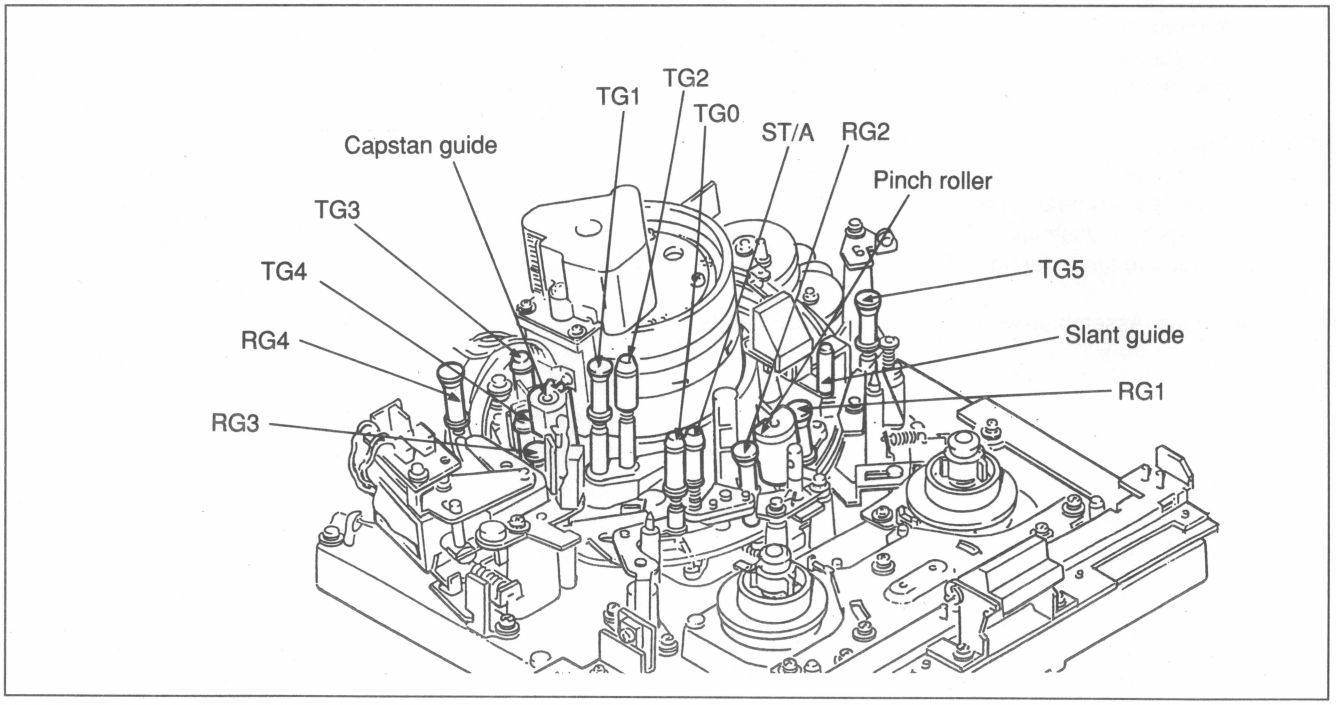

Fig. 6-1-5 Tape Guide Cleaning

6-1-5. Stationary Head

Prepare the following tools for cleaning.
- Cleaning Piece
  Sony Part No.: 2–034–697–00
- Cleaning Fluid (or an equivalent)
  Sony Part No.: 9–919–573–00

Cleaning

1. Turn the power off.

2. Moisture the cleaning piece with cleaning fluid.

3. Press the cleaning piece slightly against the tape transport surface of a stationary head and clean the surface in the vertical direction two or three times. Repeat cleaning until stains are removed.

4. Wipe the surface cleaned using the cleaning piece two or three times with dry cloth.

Be sure to perform cleaning during periodic inspection (every for 500 hours).

NOTE 1: Remove a cassette compartment before cleaning. The removal of the cassette compartment secures and facilitates cleaning. For the removal of the cassette compartment, refer to Section 2-7-1.

NOTE 2: The magnetic powder attached to a stationary head may cause a miss-recording/playback operation. Perform inspection more often according to the operating environment as well as periodic inspection and perform cleaning.

NOTE 3: The stationary head* block is constituted by precise components. The height and installation position of the stationary head is precisely adjusted by the tape transport adjustment. Be careful not to apply excessive force during cleaning.

*Stationary head: Assembled with T/C, CTL, and CUE heads

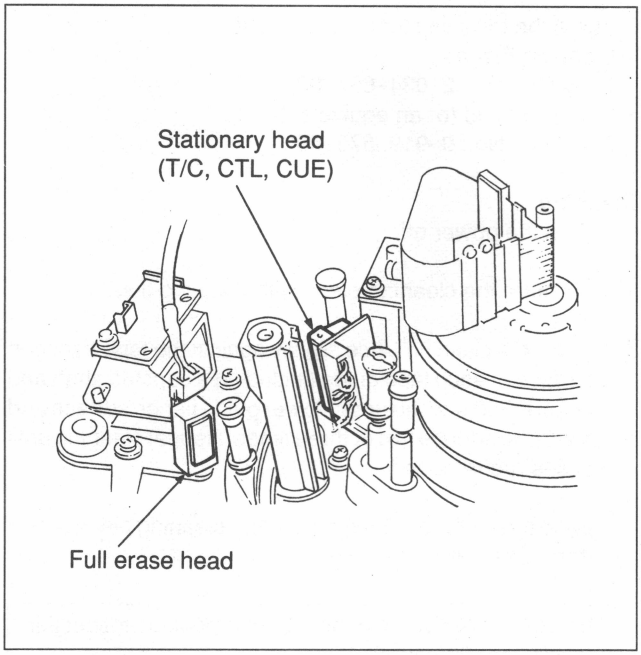

Fig. 6-1-6 Stationary Head Cleaning

6-1-6. Cassette Compartment

Prepare the following tools for cleaning.
- Cleaning Fluid (or the equivalent)
  Sony Part No.: 9–919–573–00
- Cloth (Gauze or the equivalent)

Cleaning

1. Turn the power off.

2. Remove a cassette compartment from the unit. For the removal of the cassette compartment, refer to Section 2-7-1.

3. Moisture the cloth with cleaning fluid.

4. Clean the inside/outside of a stage and L-shaped guide grooves on the right and left side panels. Repeat cleaning until stains are removed.

   Stage-up/down operation
   - Stage-up operation
     Raise a pull-up lever in the direction of arrow C while pulling a release lever in the direction of arrow A. The stage is then set to the cassette-up (EJECT) position.
   - Stage-down operation
     Lower the pull-up lever in the direction of arrow B while pulling the release lever in the direction of arrow A. The stage is then set to the cassette-down position.

5. Wipe the stage and cassette compartment lid with dry cloth.

Be sure to perform cleaning during periodic inspection (every for 500 hours).

NOTE 1: Be careful not to apply excessive force to the stage, reflecting plate, and cassette compartment lid during cleaning.

NOTE 2: Wipe the lid with dry cloth. Do not clean it with alcohol. This may cause a crack in the lid.

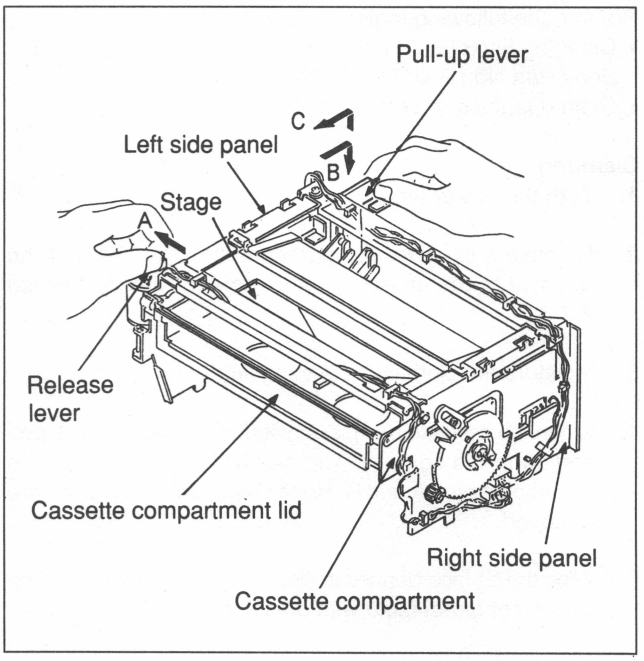

Fig. 6-1-7 Cassette Compartment Cleaning

6-1-7. Reel Table and Positioning Pins

Prepare the following tools for cleaning.
- Cleaning Fluid (or an equivalent)
  Sony Part No.: 9–919–573–00
- Cloth (Gauze or an equivalent)

Cleaning

1. Turn the power off.

2. Remove a cassette compartment from the unit. For the removal of the cassette compartment, refer to Section 2-7-1.

3. Moisture the cloth with cleaning fluid.

4. Clean the cassette reel placing surfaces (diagonally striped portion in the figure) of the reel table and the cassette positioning pins A and B. Repeat cleaning until stains are removed.

5. Wipe the surface cleaned in step 4 and the brake contacting surface of a reel table with dry cloth.

Be sure to perform cleaning during periodic inspection (every for 3000 hours).

NOTE 1: Do not attach cleaning fluid to the brake contacting surface of the reel table and brake shoe. The cleaning fluid attached to the brake shoe deteriorates the reel brake characteristic and shortens the life.

NOTE 2: Confirm stains on the cassette reel placing surface and cassette positioning pins when new tape is often used. The powder generated due to rubbing of the case of a cassette tape is attached to the reel table and positioning pins. This may exert a bad influence on the tape transport. Perform inspection more often according to the operating environment as well as periodic inspection and perform cleaning.

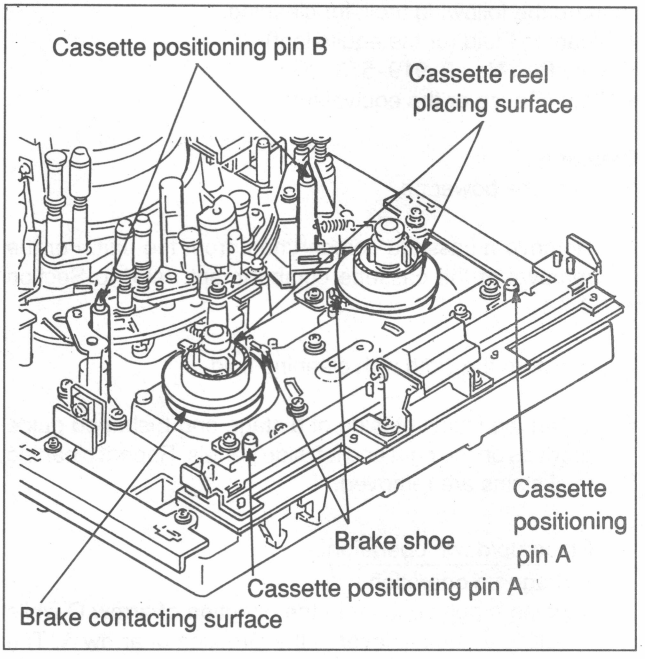

Fig. 6-1-8 Reel Table/Positioning Pins Cleaning

6-1-8. Fan Motor

Prepare the following tools for cleaning.
- Nylon brush (or an equivalent. Never use a metallic brush.)
- Vacuum cleaner

Cleaning

1. Turn the power off.

2. Remove the following three panels. (Fig. 6-1-9)
   On rear side
   - Power panel
   - Rear panel

   On bottom side
   - Bottom plate

   For the removal of the panels, refer to Section 2-5-1.

3. Clean the panels shown in Fig. 6-1-10 using a nylon brush and vacuum cleaner.

4. Clean the fins of the fan motor in the same way as in step 3.

5. Clean the peripheral block, in which the fan motor is installed, in the same way as the above.

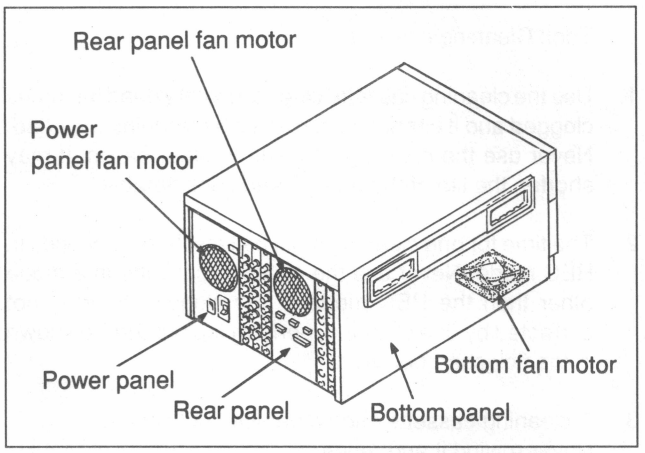

Fig. 6-1-9 Fan Motor Positions

NOTE 1: This set controls the temperature increase in the unit using three fan motors. For the ventilating portion (fan cover) of the fan motor and the fan motor installation place, dust is easy to attach because of their characteristic. When dust is attached to the ventilating portion of the fan motor and the air flow is disturbed, the temperature increase in the unit cannot be controlled. This will exert a bad influence on the performance and life. Perform inspection more often according to the operating environment as well as periodic inspection and perform cleaning.

NOTE 2: Narrow (thin) the tip of the inlet (nozzle) to raise sucking force when a vacuum cleaner is used. This facilitates the cleaner operation.

Be sure to perform cleaning during periodic inspection (every for 1000 hours).

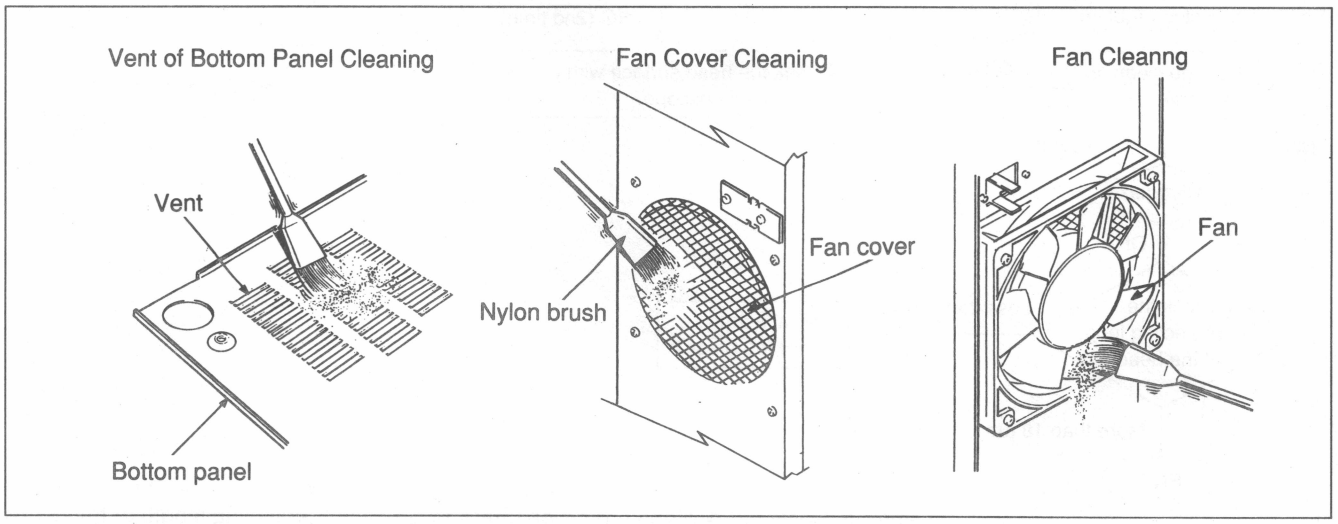

Fig. 6-1-10 Fan Motor Cleaning

6-2. HOW TO USE THE CLEANING CASSETTE

Tool: Cleaning cassette

1. Use the cleaning cassette when the rotary head becomes clogged and it cannot be corrected by cleaning the head. Never use the cleaning cassette in other cases. It may shorten the life of the rotary head considerably.

2. The time for one cleaning must be less than 5 seconds in REC mode. Never use the cleaning cassette in a mode other than the REC mode. If the clogged head is not corrected by one cleaning, perform the procedure shown in the flowchart below.

3. A cleaning cassette should be used only once. Never rewind it and reuse.

4. Use the cleaning cassette as shown in the flowchart below.

Note: After using the cleaning cassette, play back normal tape for 20 minutes in PLAY or REC mode.

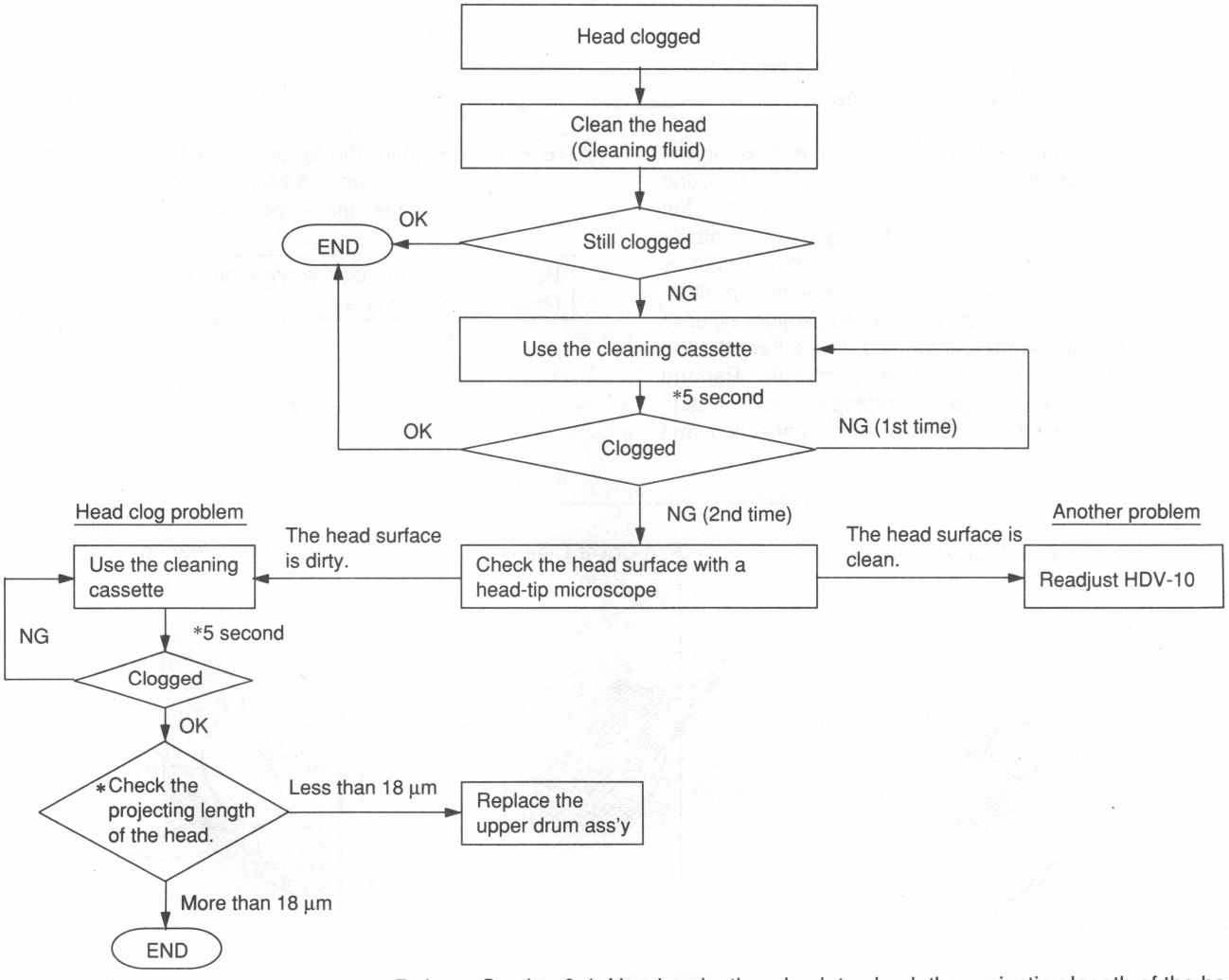

* Refer to Section 6-4, Head projection check to check the projecting length of the head.

Cleaning piece
Part No. 2-034-697-00

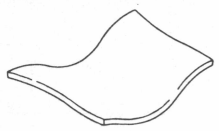

Cleaning cassette
HCT-12CL (Standard Product)
For UNIHI format

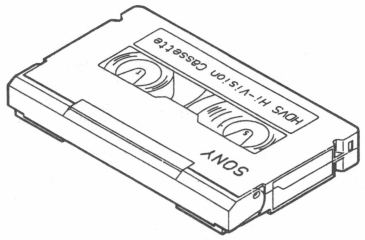

Head tip microscope
Part No. J-6252-210-A

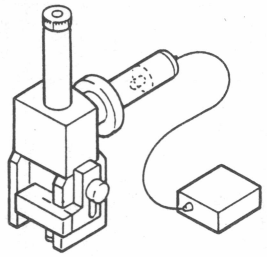

(Ref.:) It is recommended that the head-tip microscope be used to check if the head has been cleaned thoroughly.
Tool: Head-tip microscope
Part Number: J-6252-210-A
These tools are used to observe the head surface.
The following check can be performed.

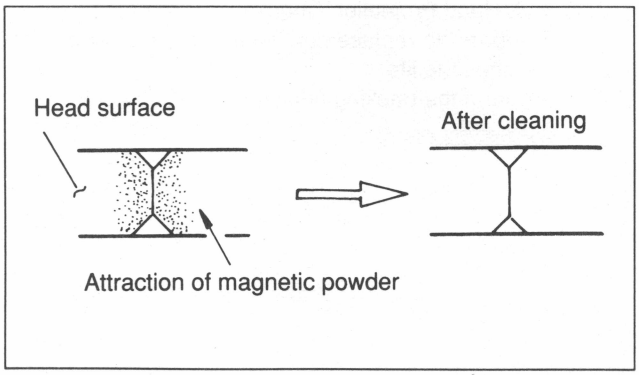

Fig. 6-2 Cleaning Tool

6-3. TRACKING CHECK

Basic Knowledge

A. Prepare the following tool for check.
- Alignment tape (Type: GR2-1)
  Sony Part No.: 8-960-040-11

B. When the upper drum ass'y has been replaced, use an ordinary tape and warm up the machine in the REC mode for about 20 minutes to obtain a good head-to-tape contact before performing this check.

Check

1. Connect the probe of the oscilloscope to TP4 (PROC) on DM-77(A) board.
   Trigger terminal: TP9 (FRAME)/SG-169 board

2. Insert an alignment tape and play back the CH-A recorded portion.

3. Turn the TRACKING control and adjust so that the playback RF waveform is maximum. (Fig. 6-3-1)

4. Confirm that the CH-1 RF waveform in PB CH-A satisfies the specification shown in Fig. 6-3-1.

5. Play back the all-channel recorded portion on an alignment tape. (Fig. 6-3-2)

6. Confirm that the CH-2 RF waveform in PB CH-A and CH-1/-2 RF waveforms in PB CH-B satisfy the specification, respectively.

7. If the specification is not satisfied in steps 4 and 6, perform the following.
   (1) 6-4. Head Projection Check
   Perform the replacement when the head projection reaches the life.
   (2) Perform the tracking adjustment in Section 8.

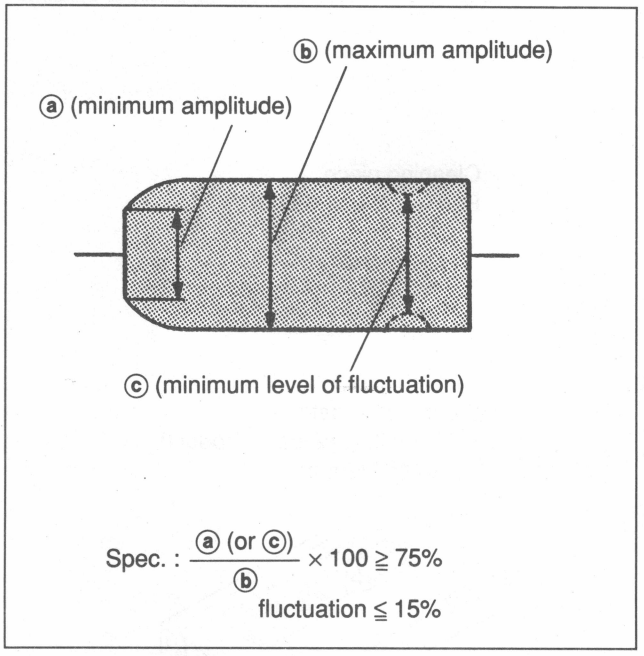

Fig. 6-3-1 Tracking Check

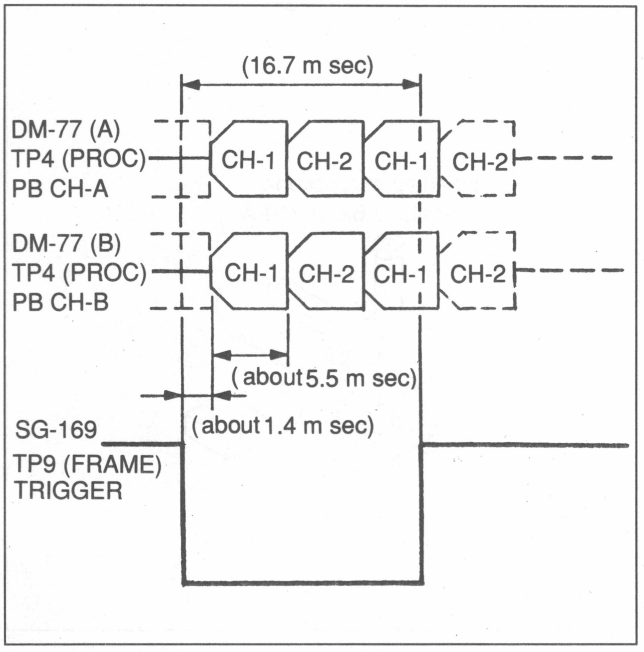

Fig. 6-3-2 Alignment Tape PB RF Waveform

6-4. HEAD PROJECTION CHECK

Basic Knowledge

A. **Recording and playback can be performed if any head projection is 18 micron or more. (except for the erase head and dummy head shown in Fig. 6-4-3)**

B. Prepare the following tool for the measurement of head projection.
   - Projection Measurement Tool (Fig. 6-4-1)
     Sony Part No.: J-6256-010-A

C. If a foreign material is attached to the probe of a projection measurement tool, the head may be damaged during measurement. Clean the probe before measurement.

D. The tool installation is performed in the same way as in the upper drum eccentricity adjustment. Install it referring to Section 7-2, Upper Drum Ass'y Replacement. No tool spacer is used during head projection check.

E. Take care that the probe does not touch the rotary head during tool installation.

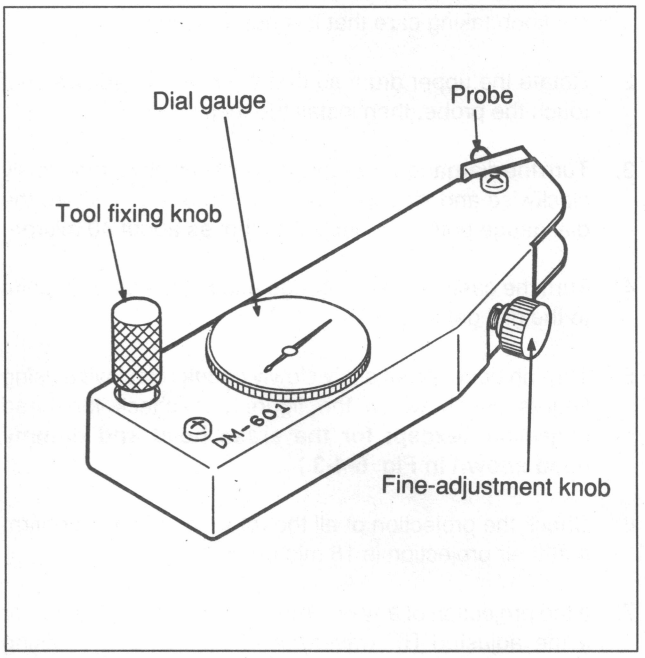

Fig. 6-4-1 Projection Measurement Tool

Head Projection Check (Refer to Fig. 6-4-2.)

1. Before installing the tool, turn the dial gauge fine-adjustment knob of the tool counterclockwise and loosen the knob taking care that it is not removed.

2. Rotate the upper drum so that the rotary head does not touch the probe, then install the tool.

3. Turn the dial gauge fine-adjustment knob of the tool slowly clockwise and stop its rotation in the position where the dial gauge pointer deflects and moves about 40 micron.

4. Turn the case of the dial gauge and set the zero (0) point to the dial gauge pointer.

5. Turn an upper drum ass'y slowly counterclockwise using fingers as shown in the figure and check the head projection. **(except for the erase head and dummy head shown in Fig. 6-4-3.)**

6. Check the projection of all the rotary heads and confirm that their projection is 18 micron or more.

7. If the projection of any one head is less than 18 micron or if the adjusted RF waveform in Section 6-3 Tracking Check does not satisfy the specification, replace the upper drum ass'y.

8. Turn the dial gauge fine-adjustment knob counterclockwise again and remove the tool after confirming that the probe is aparted from the drum side.

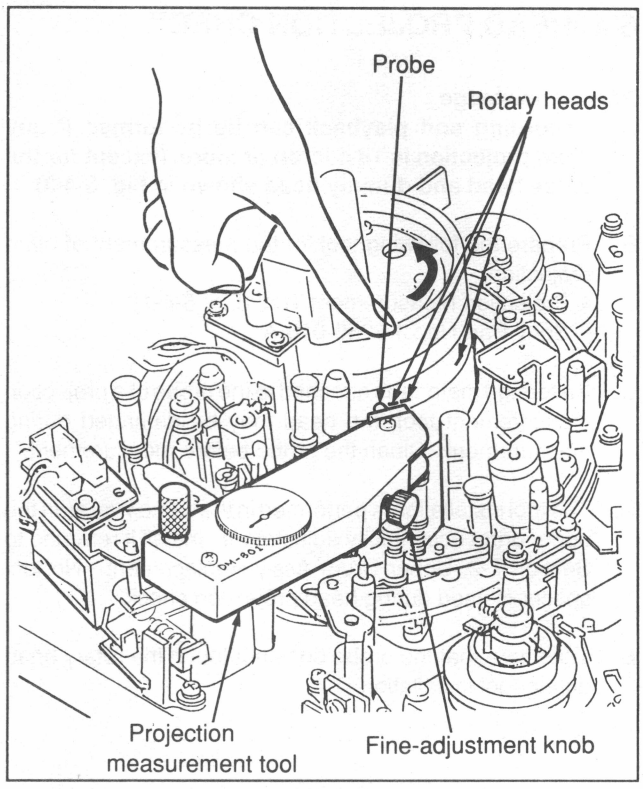

Fig. 6-4-2 Head Projection Check

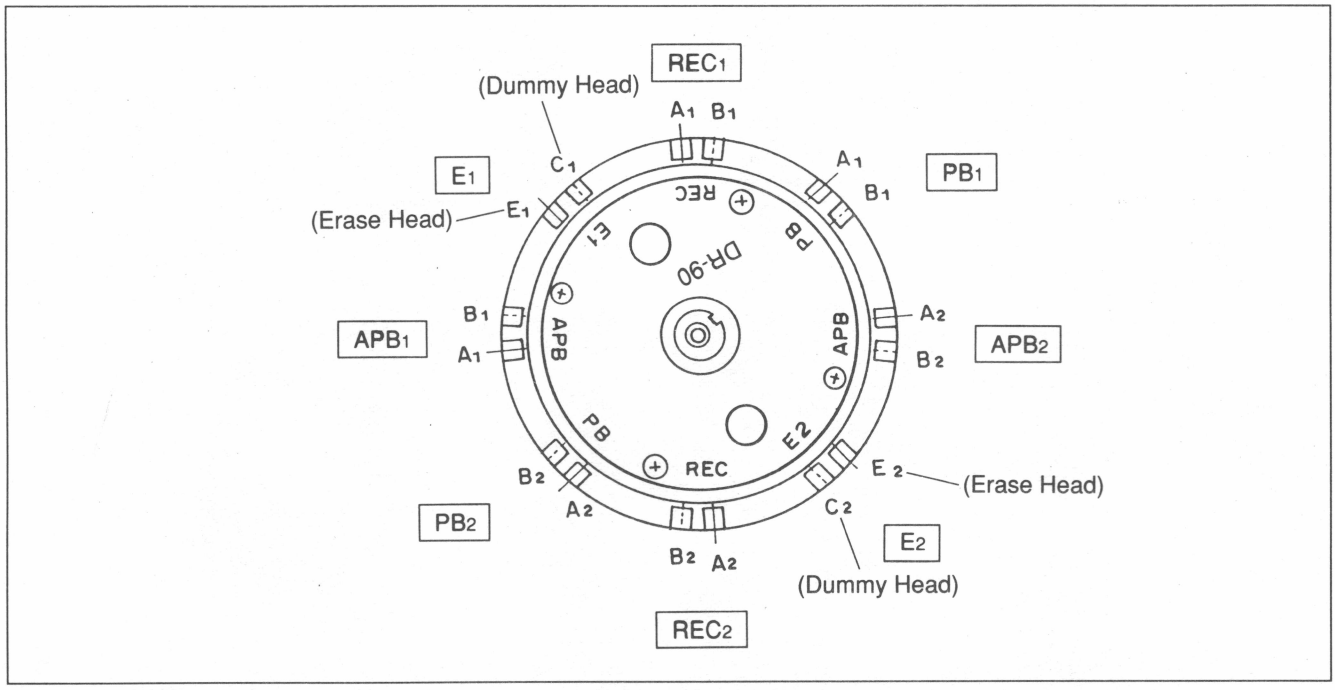

Fig. 6-4-3 Head Layout

SECTION 7
MAIN PART REPLACEMENT

7-1. GENERAL INFORMATION FOR PART REPLACEMENT

7-1-1. Preparation before Part Replacement

1. When TTP (tape transport) parts are replaced
   (1) Turn the power off.
   (2) Remove a cassette compartment.
   Refer to Section 2-7-1 Removal of Cassette Compartment.
   However, there are some replacement parts that do not require the removal of the cassette compartment.

2. When the part on the lower surface of TTP is replaced
   (1) Turn the power off.
   (2) Move the TTP block.
   Refer to Section 2-8 Mechanical Deck (TTP ass'y) Opening or Closing.

7-1-2. How to Use Tool

1. Caution Before Use
   Clean the surface of the tool used for mechanical adjustment with cleaning fluid before use. Confirm that no oil is left on the tool surface when the tape transport adjustment is performed.
   • Cleaning fluid (or the equivalent)
   Sony Part No.: 9-919-573-00

2. Tool Storage
   Clean the tool surface with cleaning fluid after used. Then, smear rust preventing oil slightly to the surface and store.
   • Oil
   Sony Part No.: 7-661-018-18

3. When the Scratch was Made on Tool
   Remove the convex portion on the tool surface using an oil stone (with finer particle). No accurate adjustment can be performed when the tool is used with the convex portion left. Take care not to damage the tool when it is handled.

7-1-3.How to Put the Unit into Threading End/Unthreading End State

1. Threading End State

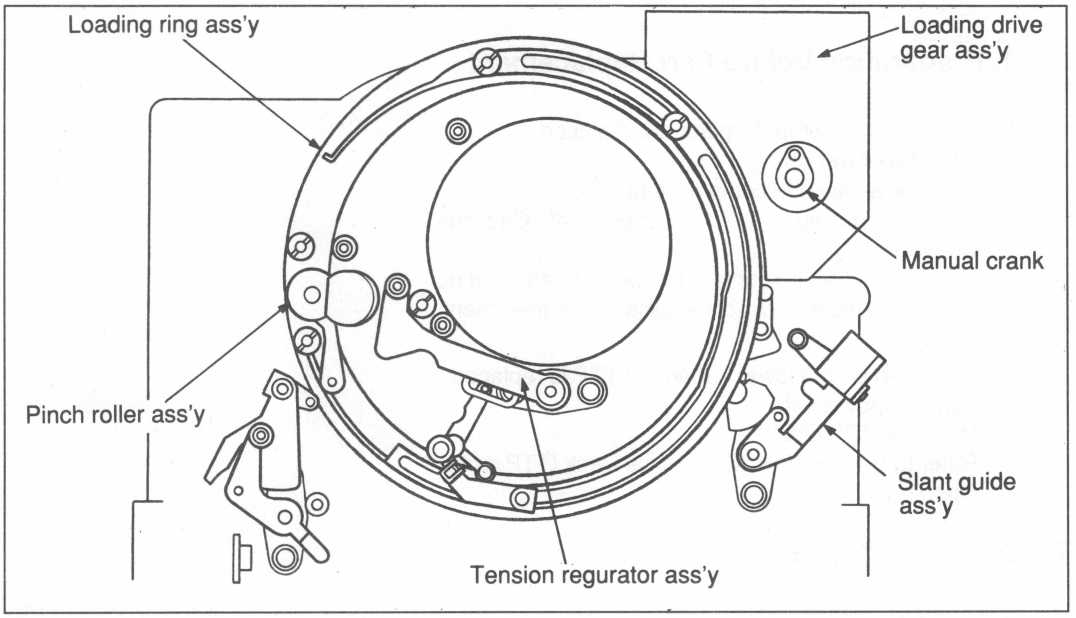

Fig. 7-1-1 Threading End

(Manual control method)
Rotate a manual crank on the loading gear ass'y clockwise.

2. Unthreading End State

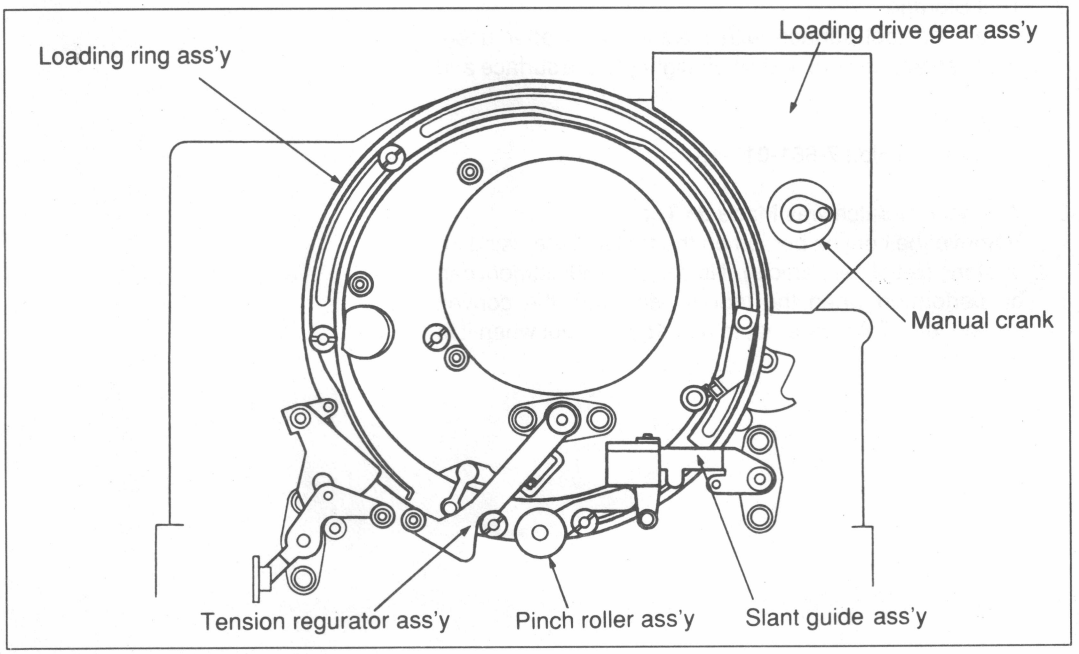

Fig. 7-1-2 Unthreading End

(Manual control method)
Rotate the manual crank to the loading gear ass'y counterclockwise.

7-2. UPPER DRUM ASS'Y REPLACEMENT

Basic Knowledge

A. An upper drum ass'y is a part that is replaced periodicly. It is necessary to perform the upper drum ass'y replacement in case of the following conditions.

- When the head projection of the rotary head reaches the life due to wearing. It is recommended to replace the upper drum ass'y when the head projection is less than 18 µm. (Except the erase head and dummy head.)
- When the specified RF waveform cannot be obtained even if the tracking adjustment is performed.

NOTE: The rotary head cannot be replaced as a single part. Replace the whole upper drum ass'y when the rotary head reaches the life.

B. When replacing the upper drum assy's, also replace a slip ring ass'y.

C. Prepare the following tools for replacements and adjustments.

- Projection Measurement tool
  Sony Part No.: J-6256-010-A
  This tool can be used for head projection measurement and upper drum eccentricity adjustment.
- Cleaning Piece
  Sony Part No.: 2-034-697-00
- Cleaning Fluid (or an equivalent)
  Sony Part No.: 9-919-573-00

D. The replacement flowchart is as follows:

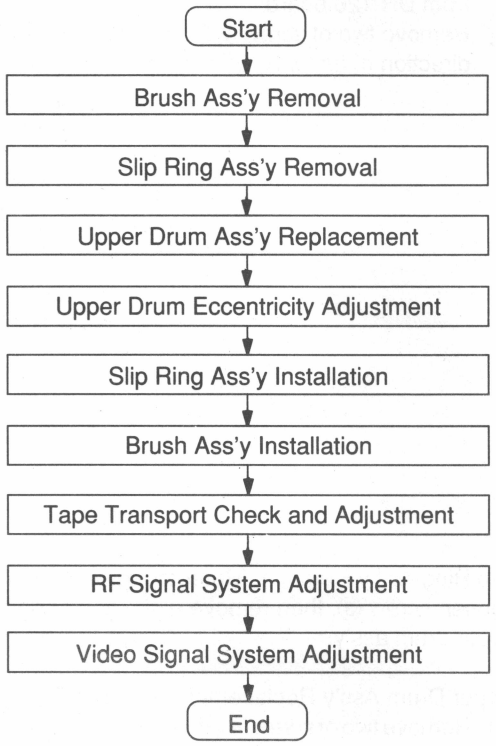

Replacement

1. Brush Ass'y Removal (Refer to Fig. 7-2-1.)
   (1) Remove two of screw ① (including washers) and brush cover.
   (2) Disconnect connectors CN7 (6 pin) and CN8 (4 pin) from DR-126 board.
   (3) Remove two of screw ②, rotate a brush ass'y in the direction of arrow A, and remove it.

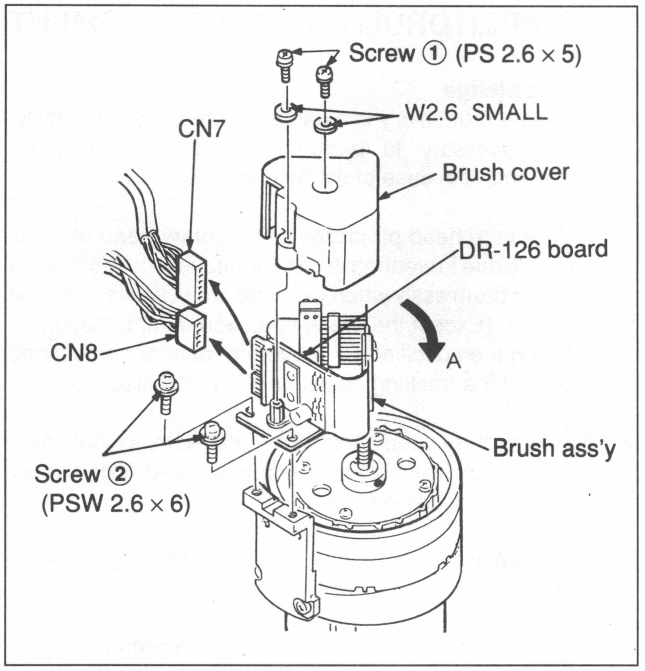

Fig. 7-2-1 Brush Ass'y Removal

2. Slip Ring Ass'y Removal (Refer to Fig. 7-2-2.)
   Loosen screw ③, then remove a slip ring ass'y from an upper drum ass'y.

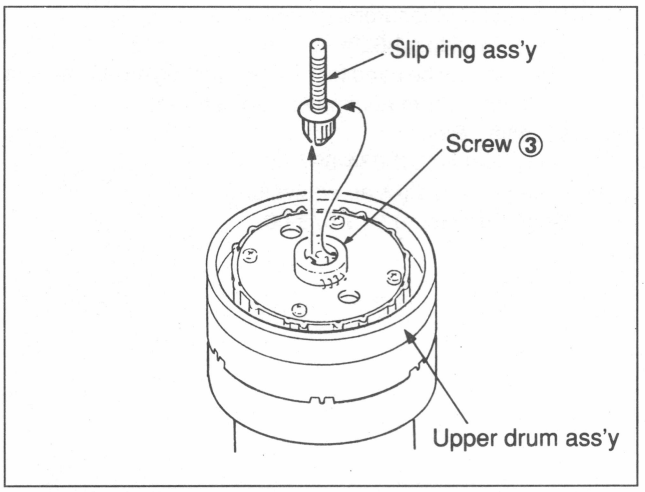

Fig. 7-2-2 Slip Ring Ass'y Removal

3. Upper Drum Ass'y Replacement (Refer to Fig. 7-2-3.)
   (1) Remove two of screw ④, then remove an upper drum ass'y upward.
   (2) Clean the installing surface of a lower drum ass'y and upper drum ass'y with a cleaning piece moistened with cleaning fluid. The upper drum ass'y has eight rotary heads. Handle the upper drum ass'y with care during cleaning and installation.
   (3) Install the new upper drum ass'y in the lower drum ass'y with two screws snugly, but do not tighten. Pay attention to the direction when installing the upper drum ass'y in the lower drum ass'y. Install in accordance with the procedure below.
      ① Align the positioning pin of the Sony mark printed on DR-127 board (lower drum side) with the positioning hole of the board name (DR-90) printed on DR-90 board (upper drum side), then push in.
      ② Fix it with two of screw ④ snugly, but do not tighten. Tighten screws ④ after the upper drum eccentricity adjustment is completed.

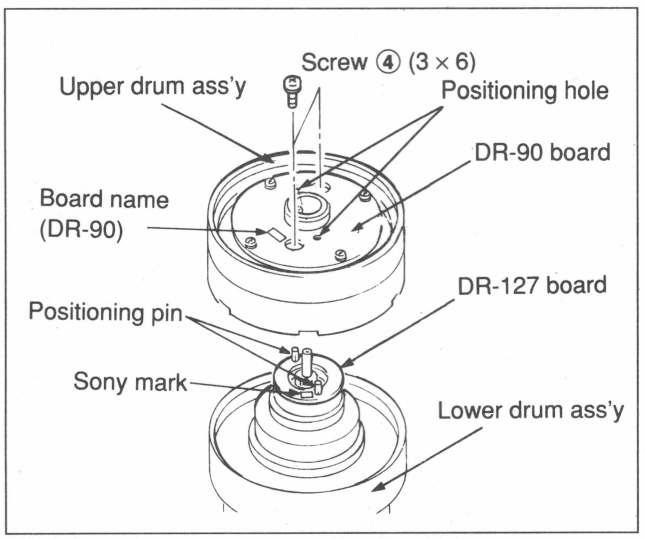

Fig. 7-2-3 Upper Drum Ass'y Replacement

NOTE: Be careful not to install the upper drum ass'y incorrectly. This causes a trouble in the entire RF system adjustment. Handle the upper drum ass'y with care during installation.

4. Upper Drum Eccentricity Adjustment

(1) Tool installation
Remove a head bracket ass'y with a full erase head installed and install a tool spacer and tool in the corresponding position.

Caution during tool installation

Take care not to touch the rotary head during tool installation.

① Head Bracket Ass'y Removal
(Refer to Fig. 7-2-3.)
Remove screw ⑤ and a head bracket ass'y. Be careful not to damage the head surface by tape guide S that is tightened together.

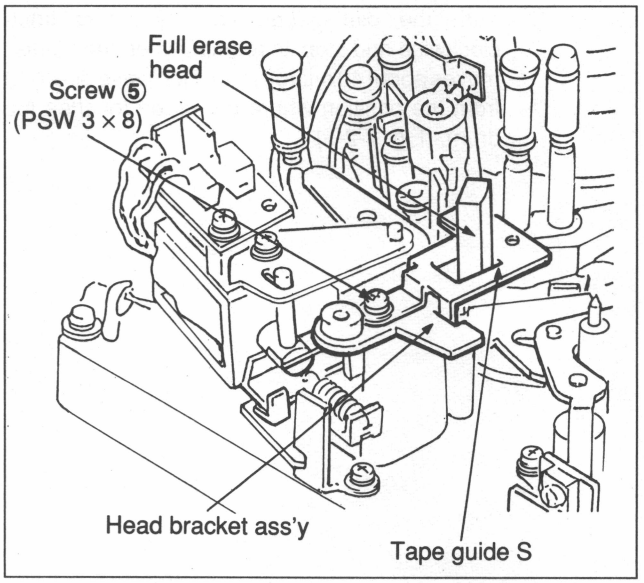

Fig. 7-2-3 Head Bracket Ass'y Removal

② Clean the tip of the probe and the outer circumference surface of the upper drum.
③ With the fixing knob, fix the tool spacer in the position where the head bracket ass'y is removed. (Fig. 7-2-4)
④ Turn the dial gauge fine-adjustment knob of the tool counterclockwise and loosen the knob taking care that it is not removed.
⑤ With the tool fixing screw, install the tool in the tool spacer taking care that it does not touch the drum ass'y.
⑥ Turn the dial gauge fine-adjustment knob clockwise and stop its rotation in the position where the dial gauge pointer deflects (when the probe touches the outer circumference surface of the drum).

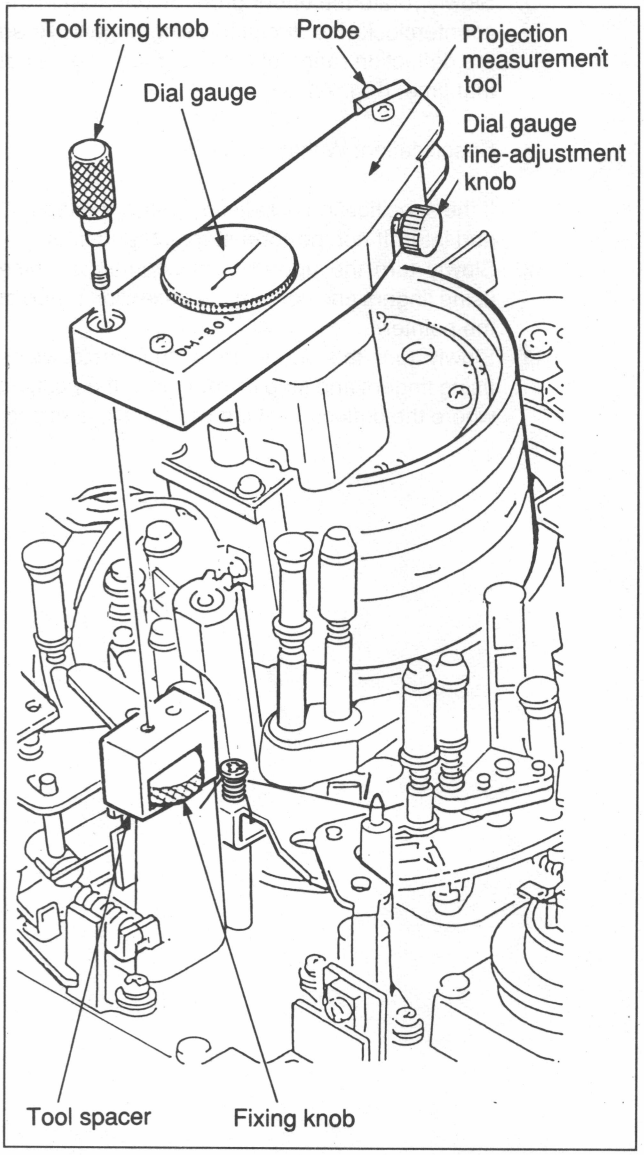

Fig. 7-2-4 Projection Measurement Tool Installation

⑦ Turn the dial gauge fine-adjustment knob clockwise and stop its rotation when the pointer moves about 40 micron in the clockwise direction from the position where the probe touches the drum. (Fig. 7-2-5)

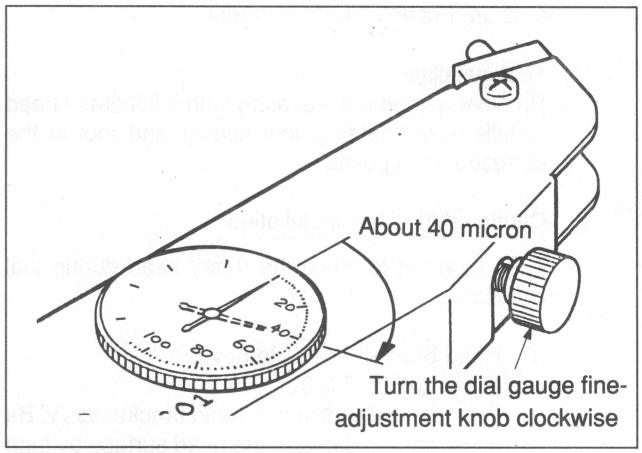

Fig. 7-2-5 Dial Gauge Setting

(2) Upper drum eccentricity adjustment

① Slowly rotate the upper drum by one turn in the counterclockwise direction using fingers. Read the deflection range of the dial gauge pointer at that time. (Fig. 7-2-6)

Specification: Within 2 micron

If the specification is satisfied, perform steps ⑦ and later. If not, perform steps ② and later.

② Slowly turn the upper drum counterclockwise using fingers and confirm the deflection range of the pointer.

③ Slowly turn the upper drum counterclockwise using fingers and stop its rotation in the position where the deflection of the pointer is minimized.

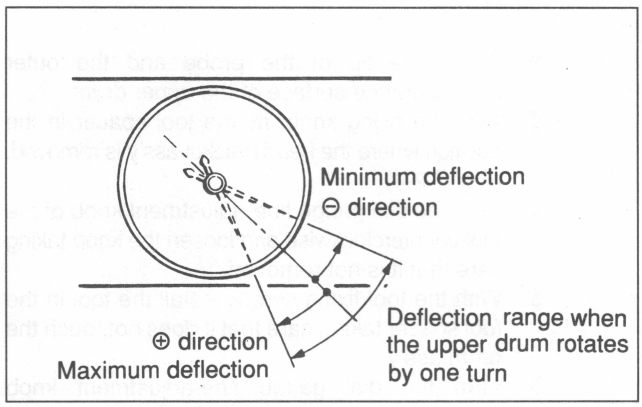

Fig. 7-2-6 Deflection Range by One Turn

④ Using fingers, push the upper edge of the upper drum opposite to the probe by 180 degrees in the direction of the arrow with a half of deflection range as reference, then adjust. (Fig. 7-2-7)

Adjustment points

- When the pointer deflects excessively
  Secure snugly fixed two of screw ④ slightly.
- When the pointer does not deflect
  Loosen snugly fixed two of screw ④ slightly.

⑤ Slowly turn the upper drum ass'y again counterclockwise and confirm the deflection range of the pointer.

⑥ If the deflection range does not satisfy the specification, repeat steps ②, ③, and ④.

⑦ After the specification is satisfied, tighten two of screw ④ alternately. Then, perform step ① again and confirm that the deflection range of the pointer satisfies the specification.

- Tightening torque of screw ④: 8 kg·cm

(3) Removal of upper drum eccentricity adjustment tool

① Before removing the tool, keep the rotary head farthest from the probe.

② Turn the dial gauge fine-adjustment knob counterclockwise, loosen it, and apart the probe from the drum side.

③ Loosen the tool fixing knob and remove the tool from the tool spacer.

④ Loosen the tool spacer fixing knob and remove the tool spacer.

⑤ Head bracket ass'y installation
Place the tape guard S to a head bracket ass'y taking care not to damage the head surface, then secure it snugly on a TTP base with screw ⑤, but do not tighten. Move the head bracket ass'y clockwise and the tape guard S counterclockwise so that the play makes zero and tighten screw ⑤. (Fig. 7-2-8)

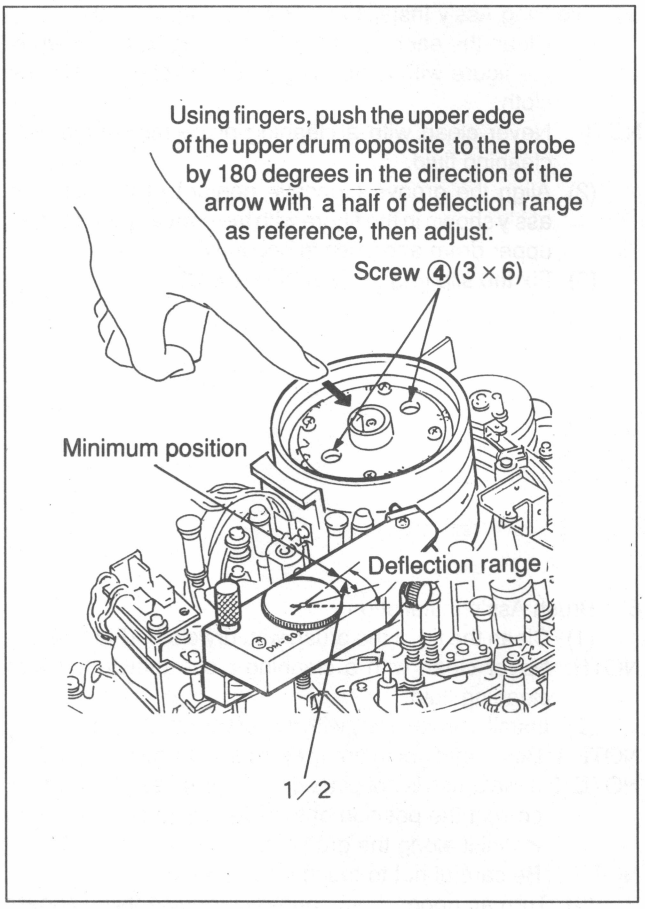

Fig. 7-2-7 Upper Drum Eccentricity Adjustment

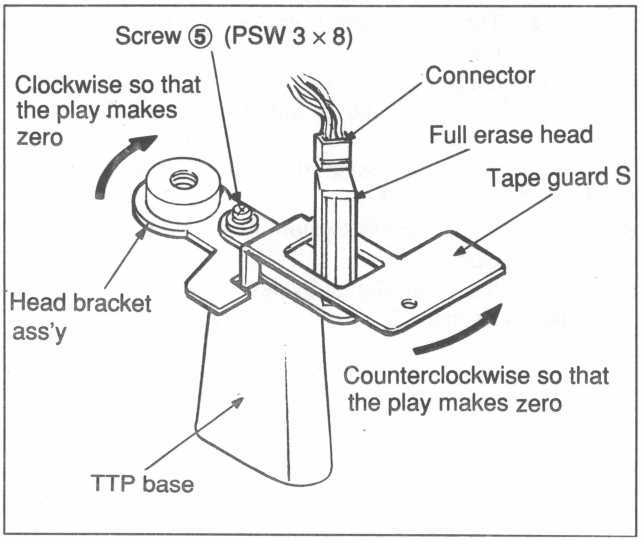

Fig. 7-2-8 Head Bracket Ass'y installation

5. Slip Ring Ass'y Installation (Refer to Fig. 7-2-9.)
   (1) Clean the each surface of a slip ring ass'y shown in the figure with a cleaning piece moistened with dry cloth.

NOTE: Never clean with a cleaning piece moistened with cleaning fluid.

   (2) Align the groove (concave portion) of the slip ring ass'y shown in the figure with the convex portion of an upper drum and push in securely.
   (3) Fix the slip ring ass'y with screw ③.

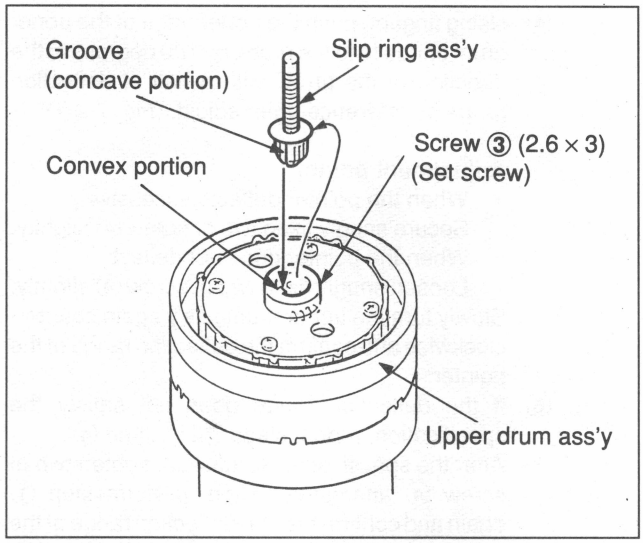

Fig. 7-2-9 Slip Ring Ass'y Installation

6. Brush Ass'y Installation
   (1) Clean the tip of the brush with dry cloth. (Fig. 7-2-10)

NOTE: Never clean with a cleaning piece moistened with cleaning fluid.

   (2) Install a brush ass'y with two of screw ②. (Fig. 7-2-11)

NOTE 1: Be careful not to apply excessive force to the brush.
NOTE 2: If the brush is not placed in the grooves of a slip ring, correct the position of the brush with tweezers and install it along the grooves.
NOTE 3: Be careful not to touch each brush.

   (3) Turn an upper drum counterclockwise using fingers and confirm the following:
      ① The brush is placed in the grooves of the slip ring.
      ② There is no abnormal sound during upper drum rotation.
   (4) Connect connectors CN7 and CN8 on DR-126 board.
   (5) Install the brush cover with two of screw ①.

7. Perform the Tape Transport Check and Adjustment. Refer to Section 8-3.
8. Perform the RF Signal System Adjustment. Refer to Section 14.
9. Perform the Video Signal System Adjustment. Refer to Section 15.

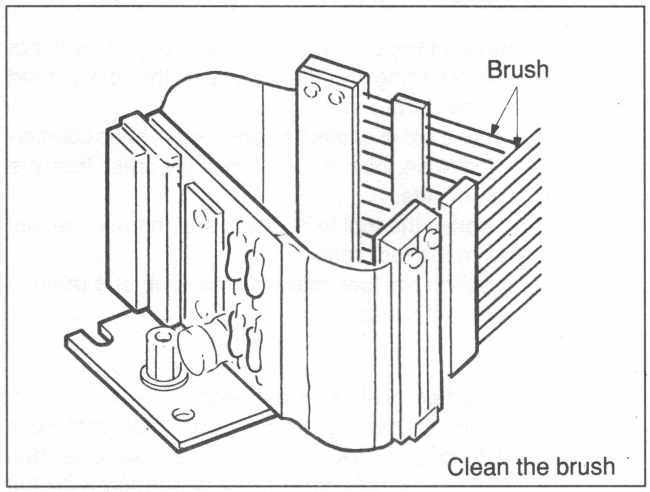

Fig. 7-2-10 Brush Ass'y Cleaning

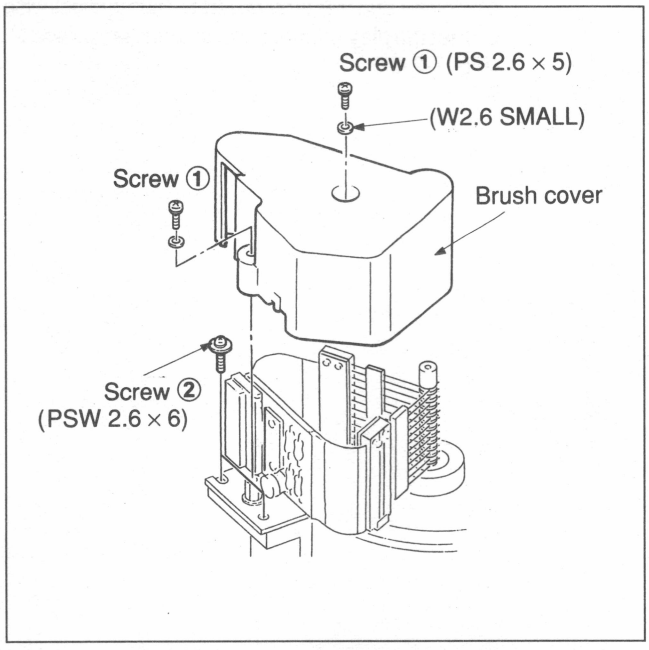

Fig. 7-2-11 Brush Ass'y and Brush Cover Installation

7-3. DRUM ASS'Y REPLACEMENT

Basic Knowledge

A. A drum ass'y is a part that is replaced periodicly. It is recommended to replace in accordance with the periodic replacement list. It is necessary to perform the drum ass'y replacement in case of the following conditions.
   (1) When the specified RF waveform cannot be obtained even if the tracking adjustment is performed because of the wearing of the lower drum lead surface.
   (2) When a heavy scratch is made on the lower drum lead surface and tape transport surface and cannot be resumed.
   (3) When the bearing of a drum rotor reaches the life, and the specifications of the VTR cannot be maintained.

B. When replacing the drum ass'y, also replace the upper drum ass'y, slip ring ass'y, and brush ass'y.

C. Prepare the following tools for replacements.
   - Cleaning Piece
     Sony Part No.: 2-034-697-00
   - Cleaning Fluid (or an equivalent)
     Sony Part No.: 9-919-573-00

D. The replacement flowchart is as follows:

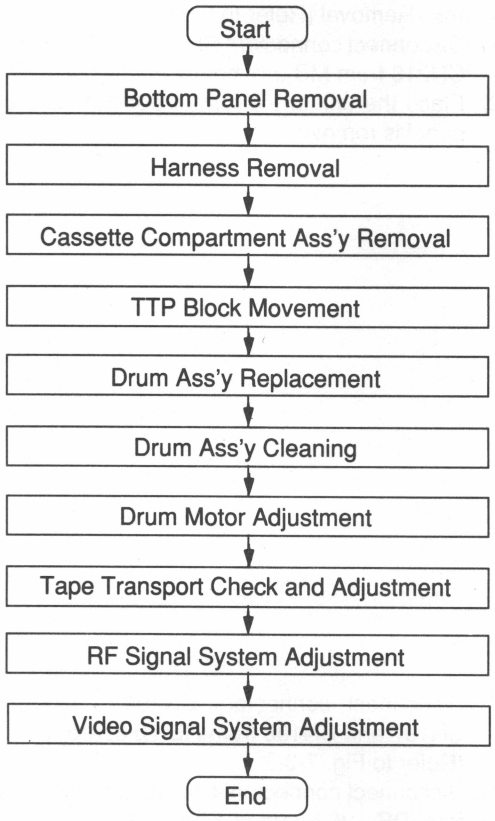

Replacement

1. Bottom Panel Removal (Refer to Fig. 7-3-1.)
   (1) Place the unit on its left side down.
   (2) Remove five of screw ① and bottom panel.

2. Harness Removal (Refer to Fig. 7-3-1.)
   (1) Disconnect connectors CN215, CN216, CN217, and CN218 from MB-247 board.
   (2) Place the unit in the former position as the bottom panel is removed.

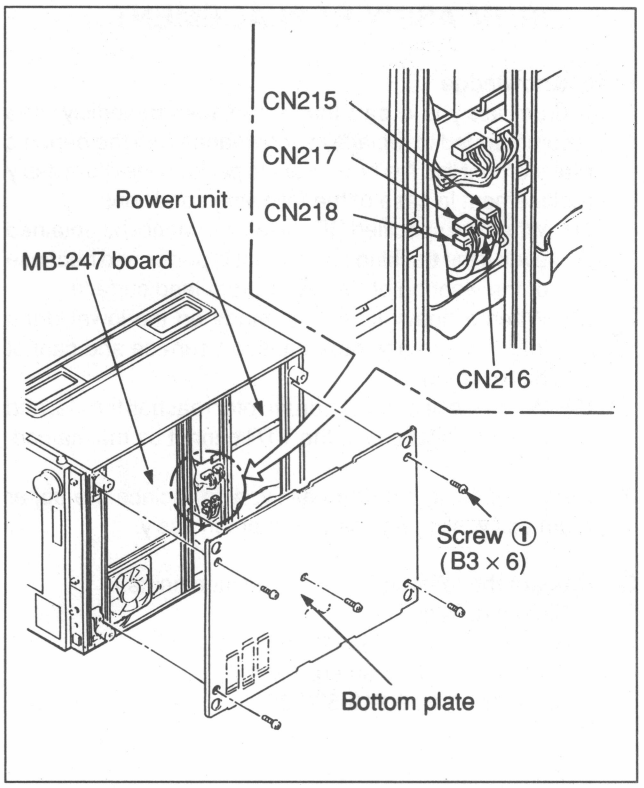

Fig. 7-3-1 Bottom Panel Removal

   (3) Disconnect connectors CN194, CN195, CN196, CN197 and CN198 from RE-70 board. (Refer to Fig. 7-3-2)
   (4) Disconnect connectors CN7 (6 pin) and CN8 (4 pin) from DR-126 board of a brush ass'y. (Refer to Fig. 7-3-2.) Remove the drum harness from the harness clamper shown in Fig. 7-3-2.

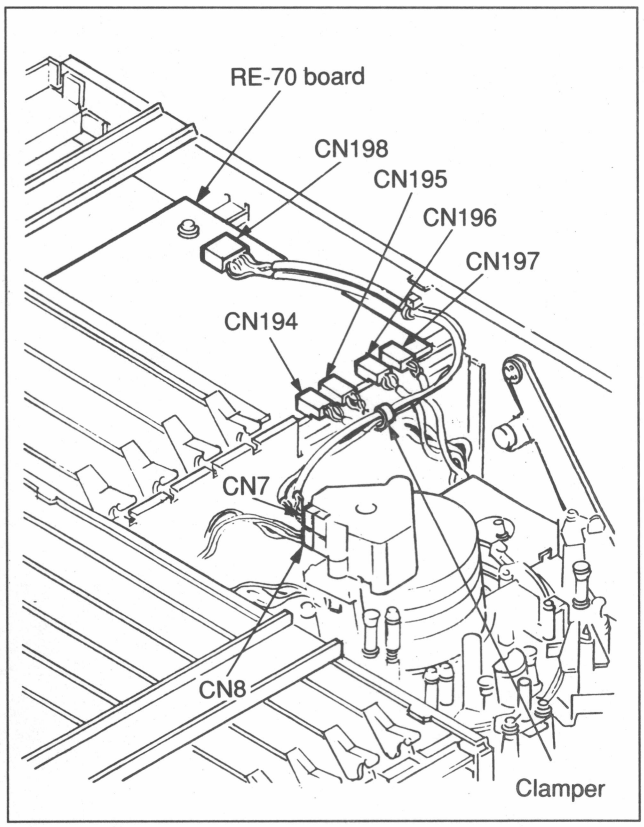

Fig. 7-3-2 Disconnect of REC Head Connectors

3. Cassette Compartment Ass'y Removal
(Refer to Fig. 7-3-3.)
For details of the procedure, refer to Section 2-7-1, Removal of Cassette Compartment.

Procedure

(1) Move a front panel in the direction of the arrow.
(2) Remove a cassette compartment stay plate.
(3) Disconnect connector CN395 while raising a cassette compartment.
(4) Remove the cassette compartment ass'y.

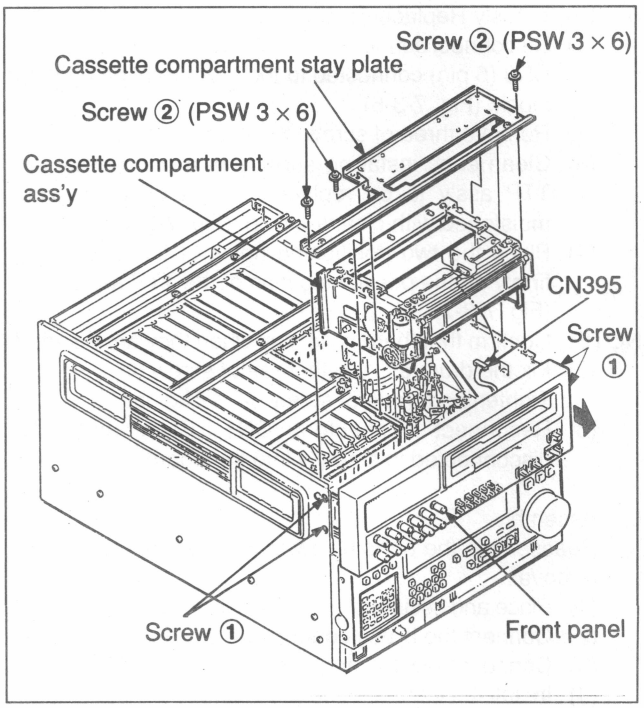

Fig. 7-3-3 Cassette Compartment Ass'y Removal

4. TTP Block Movement
For details of the procedure, refer to Section 2-8, Mechanical Deck Opening and Closing.

(1) Remove three of screw ② fixing TTP block.
(2) Loosen two ornamental screws of TTP opening and closing hinges, and raise the TTP block.
(3) Fix the TTP block in 60 degree-position.

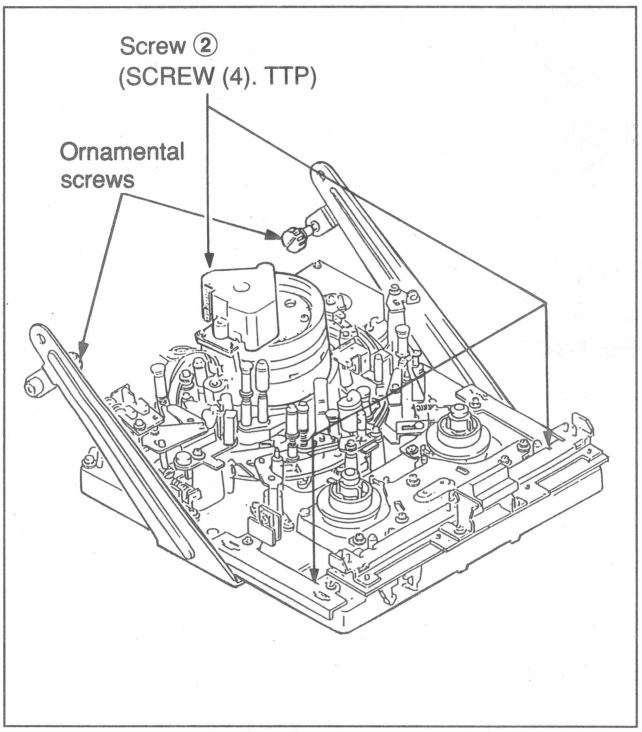

Fig. 7-3-4 TTP Block Movement (1)

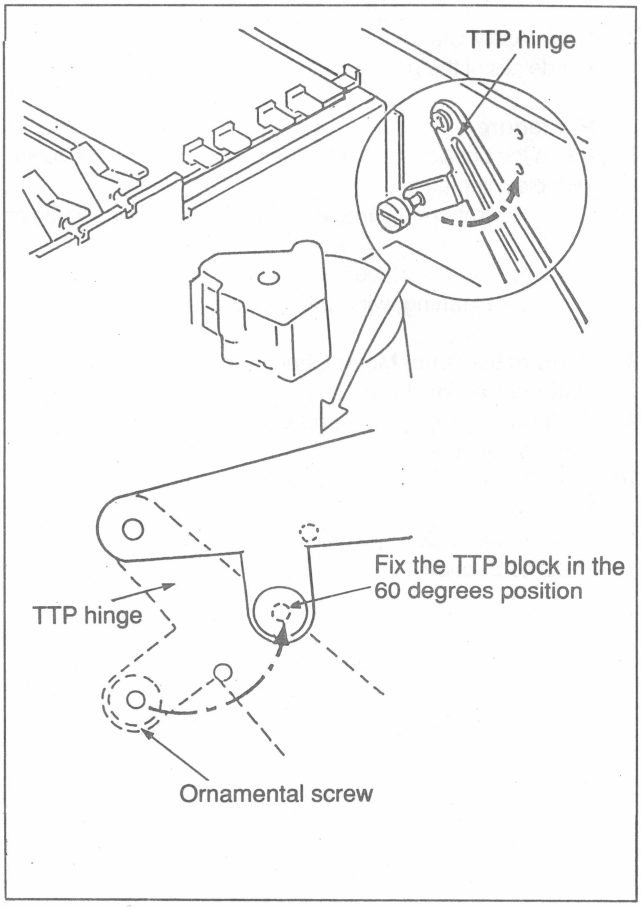

Fig. 7-3-5 TTP Block Movement (2)

5. Drum Ass'y Replacement
   (1) Disconnect connectors CN1 (4 pin), CN2 (8 pin), and CN3 (6 pin) connected to the drum rotation detector block. (Fig. 7-3-6)
   (2) Remove three of screw ③ and drum ass'y.
   (3) Clean each installing surface of a drum ass'y and TTP ass'y to be replaced with a cleaning piece moistened with cleaning fluid. (Fig. 7-3-7)
   (4) Place the two positioning holes of the drum ass'y firmly on the positioning pins of the TTP ass'y. (Fig. 7-3-7)

NOTE: Confirm that there is no play when they are inserted.

   (5) Fix the drum ass'y with three of screw ③.
   Tightening torque of screw ③: 12 kg.cm
   (6) Reconnect connectors CN1, CN2, and CN3 disconnected in step (1) into the board.

6. Assembly
   Reassemble the parts below in the reverse order of the removal.
   (1) Place and secure the TTP ass'y in the former position:
   (2) Connect the brush connectors.
   (3) Connect the REC head connectors.
   (4) Install the cassette compartment.
   (5) Place the front panel in the former position, then fix.
   (6) Place the unit on its left side down.
   (7) Connect the PB head connectors.
   (8) Install the bottom panel.
   (9) Place the unit in the former position.

7. Drum Ass'y Cleaning
   For details of the procedure, refer to Section 6-1, Cleaning.

   Procedure
   Clean the positions below with a cleaning piece moistened with cleaning fluid.
   (1) Tape transport surface of upper drum ass'y and lower drum ass'y
   (2) Drum lead surface
   (3) After cleaning, wipe the surface with dry cloth.

8. Perform the Drum Motor Check and Adjustment.
   Refer to Section 12-10, 11, 12.
9. Perform the Tape Transport Check and Adjustment.
   Refer to Section 8-3.
10. Perform the RF Signal System Adjustment.
    Refer to Section 14.
11. Perform the Video Signal System Adjustment.
    Refer to Section 15.

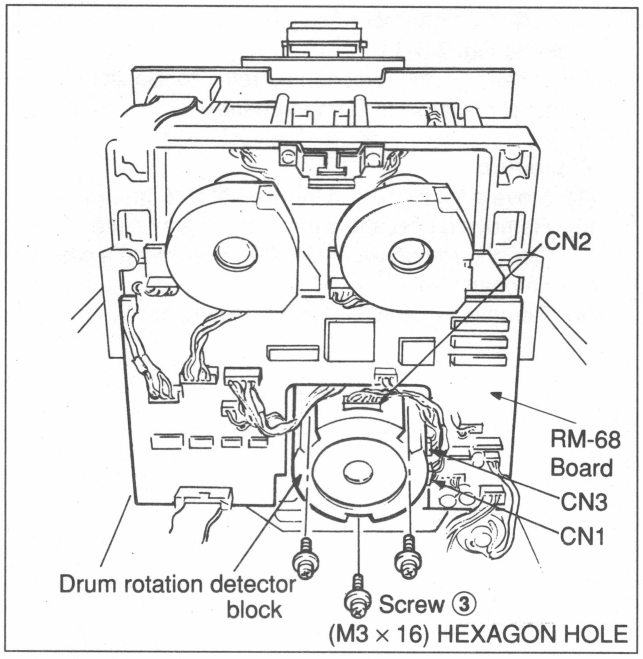

Fig. 7-3-6 Drum Ass'y Replacement

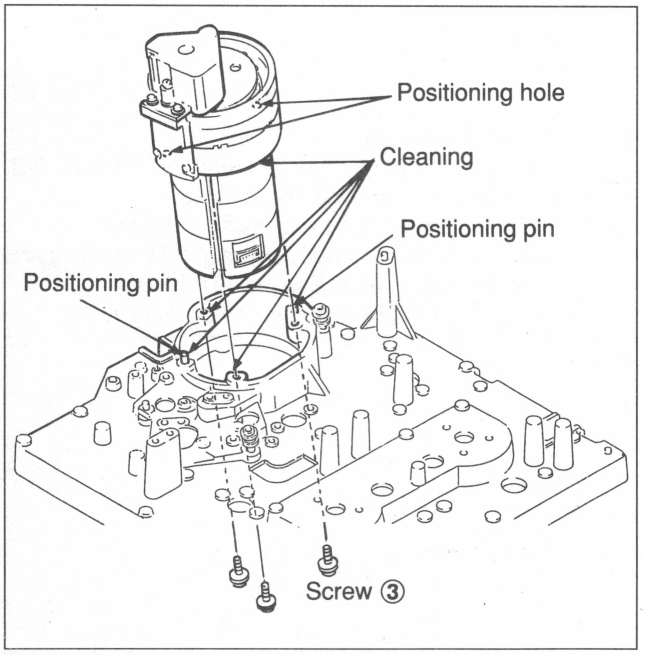

Fig. 7-3-7 Drum Assembly

7-4. BRUSH SLIP RING ASS'Y REPLACEMENT

The Brush Slip Ring Ass'y Replacement is explained in the order below.

7-4-1. Brush Ass'y Replacement
7-4-2. Slip Ring Ass'y Replacement

7-4-1. Brush Ass'y Replacement

Basic Knowledge

A. A brush ass'y is a part that is replaced periodicly. It is recommended to replace the assembly in accordance with the periodic replacement list.

B. Never apply a conductive grease to the brush portion. (The specifications cannot then be maintained.)

C. It is not necessary to perform the adjustment after replacement. Check only that the brushes are placed in the grooves of the slip ring.

D. Prepare the following tools for replacements.
- Cleaning Piece
  Sony Part No.: 2-034-697-00

E. The replacement flowchart is as follows:

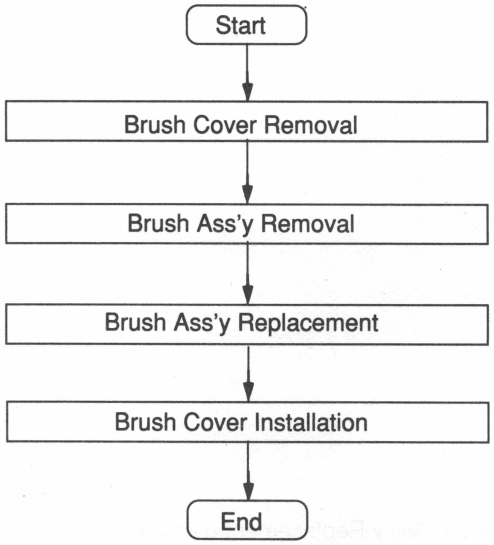

Replacement

1. Brush Cover Removal (Refer to Fig. 7-4-1.)
   Remove two of screw ① (including washers) and a brush cover.

2. Brush Ass'y Removal (Refer to Fig. 7-4-1.)
   (1) Disconnect connectors CN7 (6 pin) and CN8 (4 pin) from DR-126 board.
   (2) Remove two of screw ②, turn a brush ass'y in the direction of arrow A, and remove it.

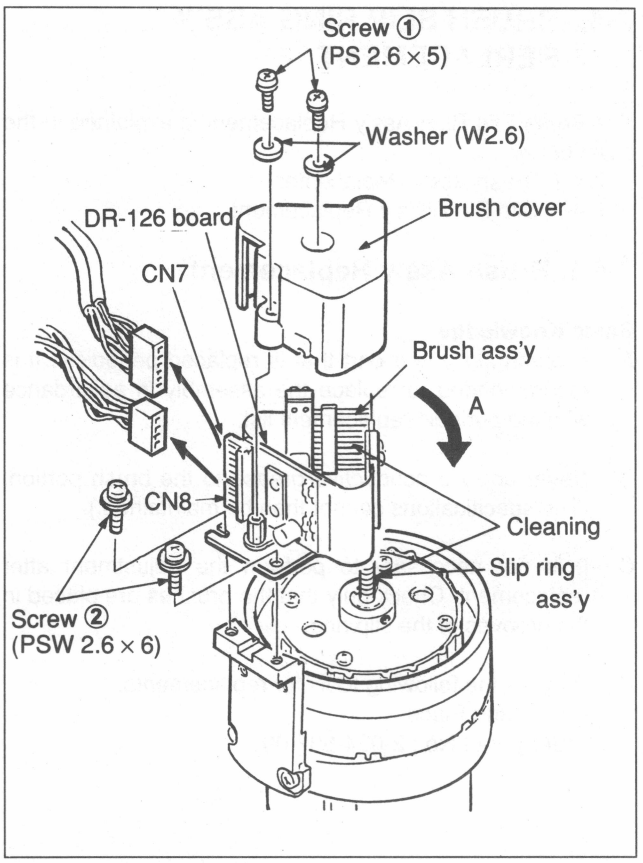

Fig. 7-4-1 Brush Ass'y Removal

3. Brush Ass'y Replacement (Refer to Fig. 7-4-2.)
   (1) Clean the tip of the brush and the grooves of the slip ring shown in the figure with dry cloth.

NOTE: Never clean with a cleaning piece moistened with cleaning fluid.

   (2) Install the brush ass'y with two of screw ②.

NOTE 1: Be careful not to apply excessive force to the brush.
NOTE 2: If the brush is not placed in the grooves of the slip ring, correct the position of the brush with tweezers as shown in the figure and install it along the grooves.
NOTE 3: Be careful not to touch each brush.

   (3) Turn the upper drum counterclockwise using fingers and confirm the following:
      ① The brush is placed in the grooves of the slip ring.
      ② There is no abnormal sound during upper drum rotation.
   (4) Connect connectors CN7 and CN8 on DR-126 board. (Fig. 7-4-1)

4. Brush Cover Installation (Refer to Fig. 7-4-1.)
   Install the brush cover with two of screw ① (including washers).

NOTE: Install the brush cover taking care that it does not touch the brush.

5. Turn the upper drum counterclockwise using fingers and confirm the following:
   (1) The brush is placed in the grooves of the slip ring.
   (2) There is no abnormal sound during upper drum rotation.

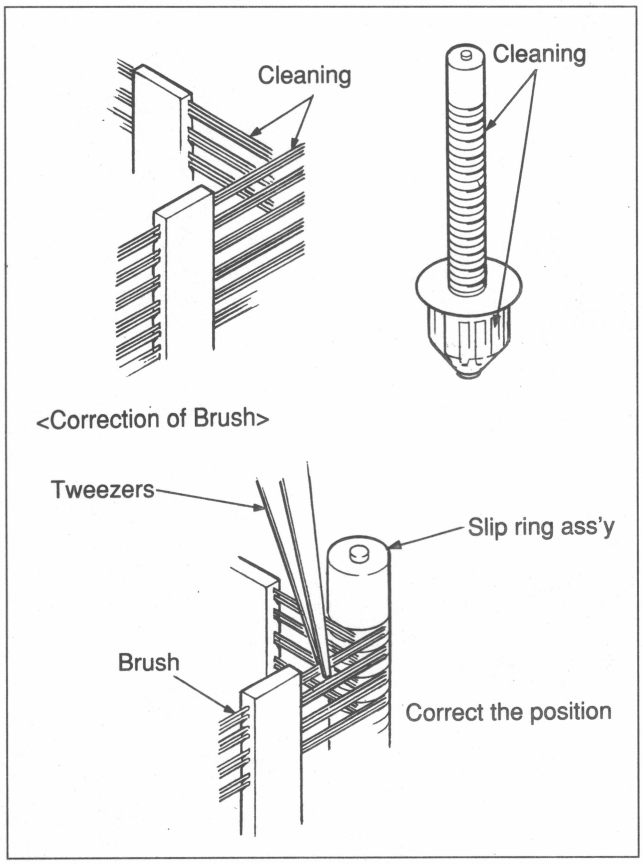

Fig. 7-4-2 Brush Ass'y Replacement

7-4-2. Slip Ring Ass'y Replacement

Basic Knowledge

A. A slip ring ass'y is a part that is replaced periodicly. When replacing an upper drum ass'y, also replace the slip ring ass'y simultaneously.

B. Never apply conductive grease to the contacting point of the slip ring ass'y. (The specifications cannot then be maintained.)

C. Prepare the following tools for replacements.
- Cleaning Piece
  Sony Part No.: 2-034-697-00

D. The replacement flowchart is as follows:

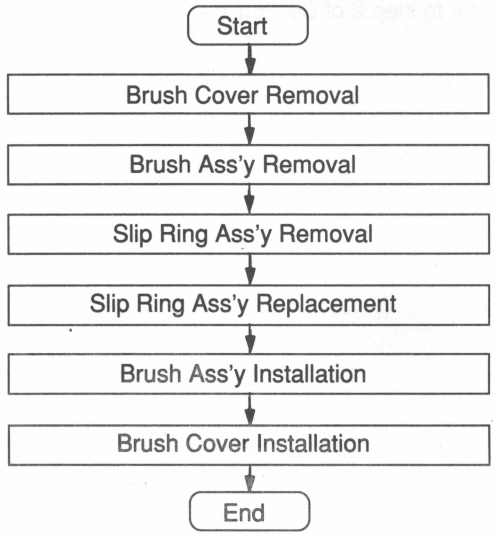

Replacement

1. Brush Cover Removal (Refer to Fig. 7-4-3.)
   Refer to step 1 of Section 7-4-1.

2. Brush Ass'y Removal (Refer to Fig. 7-4-3.)
   Refer to step 2 of Section 7-4-1.

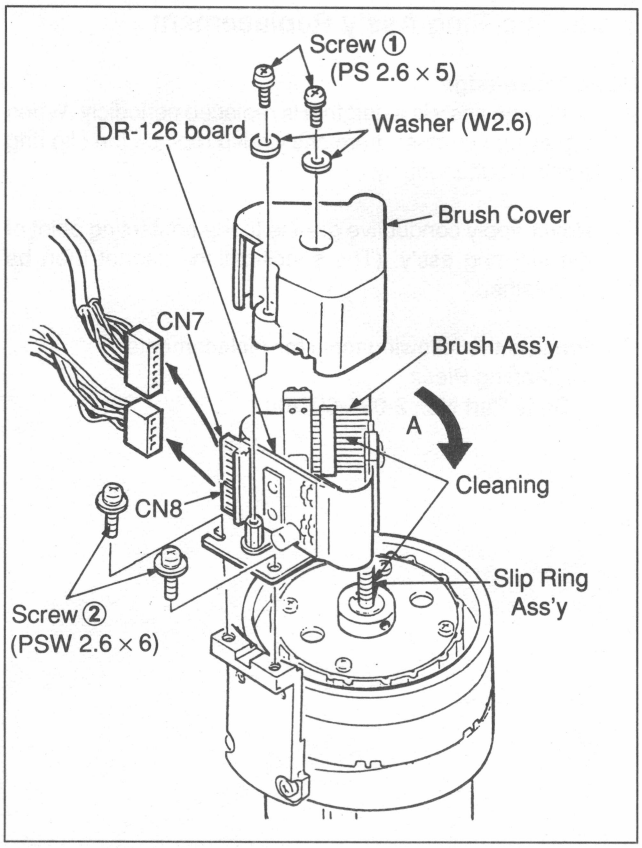

Fig. 7-4-3 Brush Ass'y Removal

3. Slip Ring Ass'y Removal (Refer to Fig. 7-4-4.)
   Remove screw ③, then remove the slip ring ass'y from the upper drum ass'y.

NOTE: The slip ring ass'y is installed as shown in the figure. Remove screw ③ completely, then remove the slip ring ass'y.

4. Slip Ring Ass'y Replacement (Refer to Fig. 7-4-4.)
   (1) Clean the grooves and terminals of the new slip ring ass'y with dry cloth.

NOTE: Never clean with cleaning a piece moistened with cleaning fluid.

   (2) Align the groove (concave portion) of the slip ring ass'y with the convex portion of the upper drum, then push in securely. Fix the slip ring ass'y with screw ③.

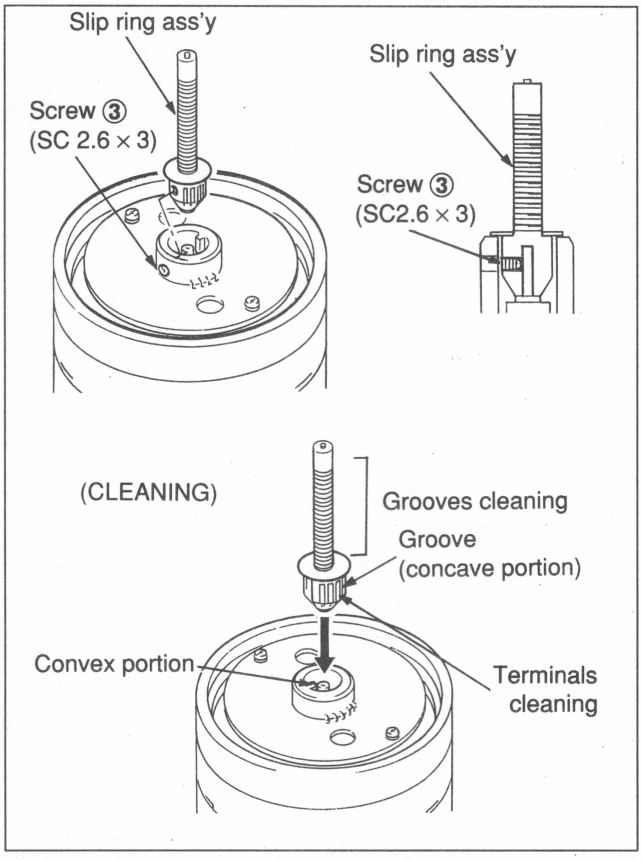

Fig. 7-4-4 Slip Ring Ass'y Replacement

5. Brush Ass'y Installation (Refer to Fig. 7-4-5.)
   (1) Clean the tip of the brush with dry cloth. (Fig. 7-4-5)

NOTE: Never clean with a cleaning piece moistened with cleaning fluid.

   (2) Install the brush ass'y with two of screw ②. (Fig. 7-4-5)

NOTE 1: Be careful not to apply excessive force to the brush.

NOTE 2: If the brush is not placed in the grooves of the slip ring, correct the position of the brush with tweezers and install it along the grooves. (Fig. 7-4-2)

NOTE 3: Be careful not to touch each brush.

   (3) Turn the upper drum counterclockwise using fingers and confirm the following:
      ① The brush is placed in the grooves of the slip ring.
      ② There is no abnormal sound during upper drum rotation.
   (4) Connect connectors CN7 and CN8 on DR-126 board. (Fig. 7-4-5)

6. Brush Cover Installation (Refer to Fig. 7-4-5.)
   Install the brush cover with two of screw ① (including washers).

NOTE: Install the brush cover taking care that it does not touch the brush.

7. Turn the upper drum counterclockwise using fingers and confirm the following:
   (1) The brush is placed in the grooves of the slip ring.
   (2) There is no abnormal sound during upper drum rotation.

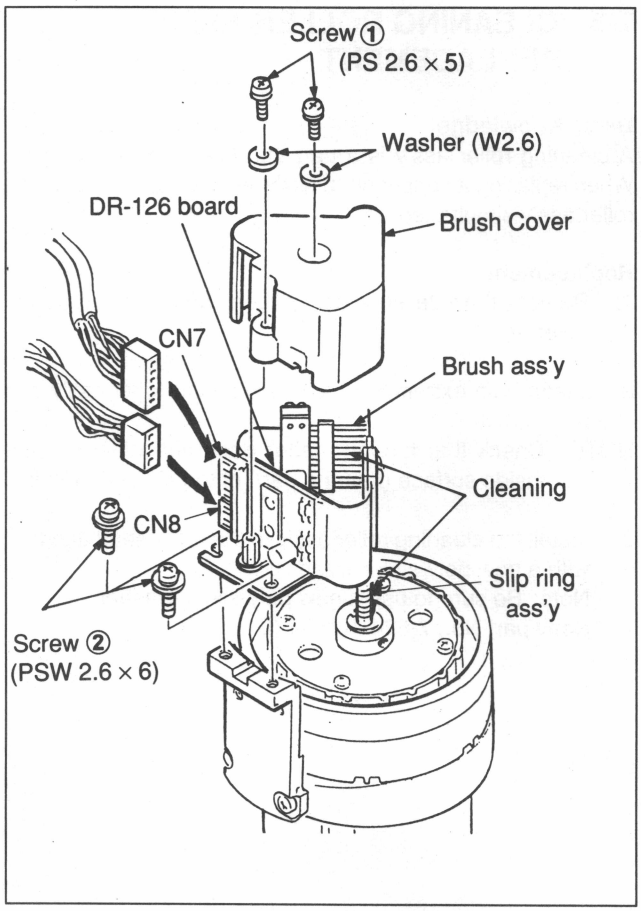

Fig. 7-4-5 Brush Ass'y Installation

7-5. CLEANING ROLLER ASS'Y REPLACEMENT

Basic Knowledge

A cleaning roller ass'y is a part that is replaced periodicly. When replacing an upper drum ass'y, also replace the cleaning roller ass'y simultaneously.

Replacement

1. Remove the roller shaft's poly-slider-washer and cleaning roller ass'y.

2. Clean both extremes of a new cleaning roller ass'y and roller shaft.

NOTE: Check that foreign matter does not adhere to the inside surface (bearing part) of the cleaning roller.

3. Install the cleaning roller ass'y to the roller shaft and fix it with a new poly-slider-washer.
   Note: Be sure to use a new poly-slider-washer.
   Sony part No.: 7-624-101-04 (E1.2)

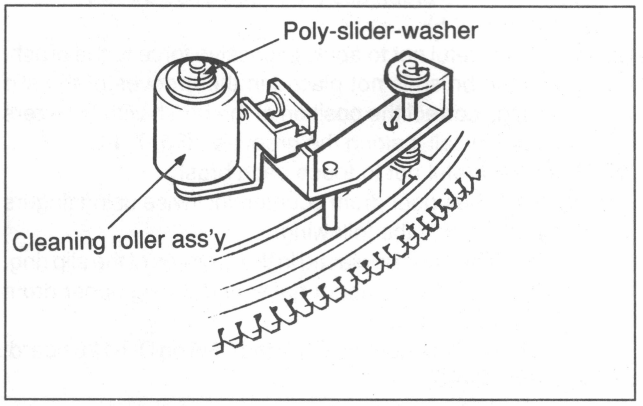

Fig. 7-5-1 Cleaning Roller Ass'y Replacement

7-6. PINCH ROLLER ASS'Y REPLACEMENT

Basic Knowledge

A. A pinch roller ass'y is a part that is replaced periodicly. It is recommended to replace the assembly in accordance with the periodic replacement list.

B. Rotate a manual crank and move the pinch roller ass'y near the manual crank before replacing the pinch roller ass'y. (Fig. 7-6-1)

C. There are tape guides on both sides of the pinch roller. Be careful not to damage the tape guides during replacement.

D. Prepare the following tools for replacements.
- Thickness Gauge
  Sony Part No.: J-6041-670-A
- Sony Grease
  Sony Part No.: 7-662-010-04
- Cloth (or gauze)

E. The replacement flowchart is as follows:

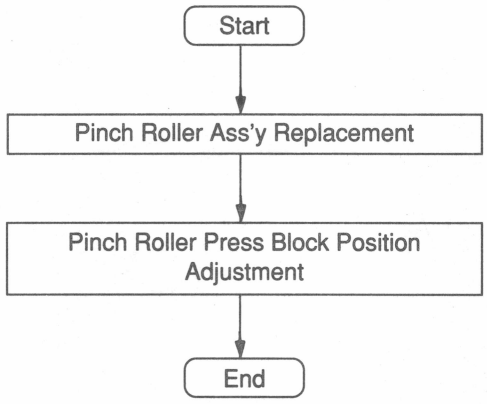

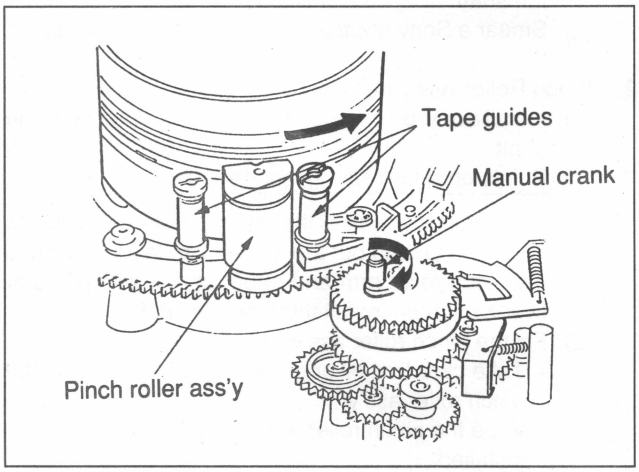

Fig. 7-6-1 Pinch Roller Ass'y Movement

Replacement

1. Pinch Roller Ass'y Removal
   (1) Remove the E-ring from the pinch roller shaft.
   (2) Remove a pinch roller ass'y and return spring from the shaft.
   (3) Smear a Sony grease thinly to the pinch roller shaft.

2. Pinch Roller Ass'y Installation
   (1) Install a new pinch roller ass'y and return spring in the shaft.
   Points on return spring installation

   Put the shorter wire of the return spring in the rib of a loading ring, and put the longer side in its arm. Hold the pinch roller arm and return spring with pliers or tweezers, then install them on the shaft.
   (2) Fix the pinch roller ass'y with the E-ring.
   - Take care that oil or grease is not attached to the pinch roller ass'y.
   - Wipe the pinch roller ass'y with dry cloth after it is installed.

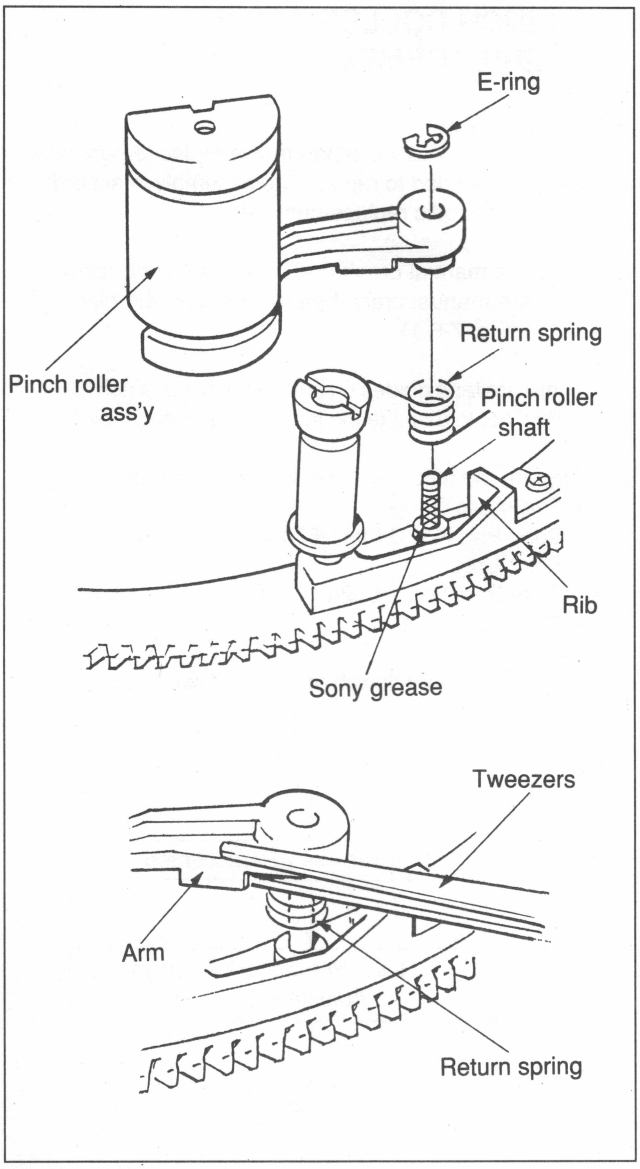

Fig. 7-6-2 Pinch Roller Ass'y Removal

3. Pinch Roller Press Block Position Adjustment
Mode: Threading End

Check method:

(1) Press the iron core of a pinch solenoid in the absorbed direction using fingers as far as it will go.
(2) Confirm that the clearance between a pinch press lever and pinch limiter satisfies specification A.

Adjustment method:

(1) Loosen screw ① fixing a solenoid positioning plate by one turn.
(2) Loosen two of screw ② fixing the pinch solenoid block by 1/4 to 1/2 turn.
(3) Put a thickness gauge (t = 0.6 mm) in the clearance between the pinch press lever and the pinch limiter.
(4) Move the pinch solenoid block in the direction of arrow A so that the thickness gauge is lighty held by the pinch press lever and pinch limiter. Remove the thickness gauge and check the clearance to meet the specification A.
(5) Tighten two of screw ②, then confirm in accordance with the check method.
(6) Put the solenoid positioning plate in the notch of the pinch solenoid block and tighten screw ①.

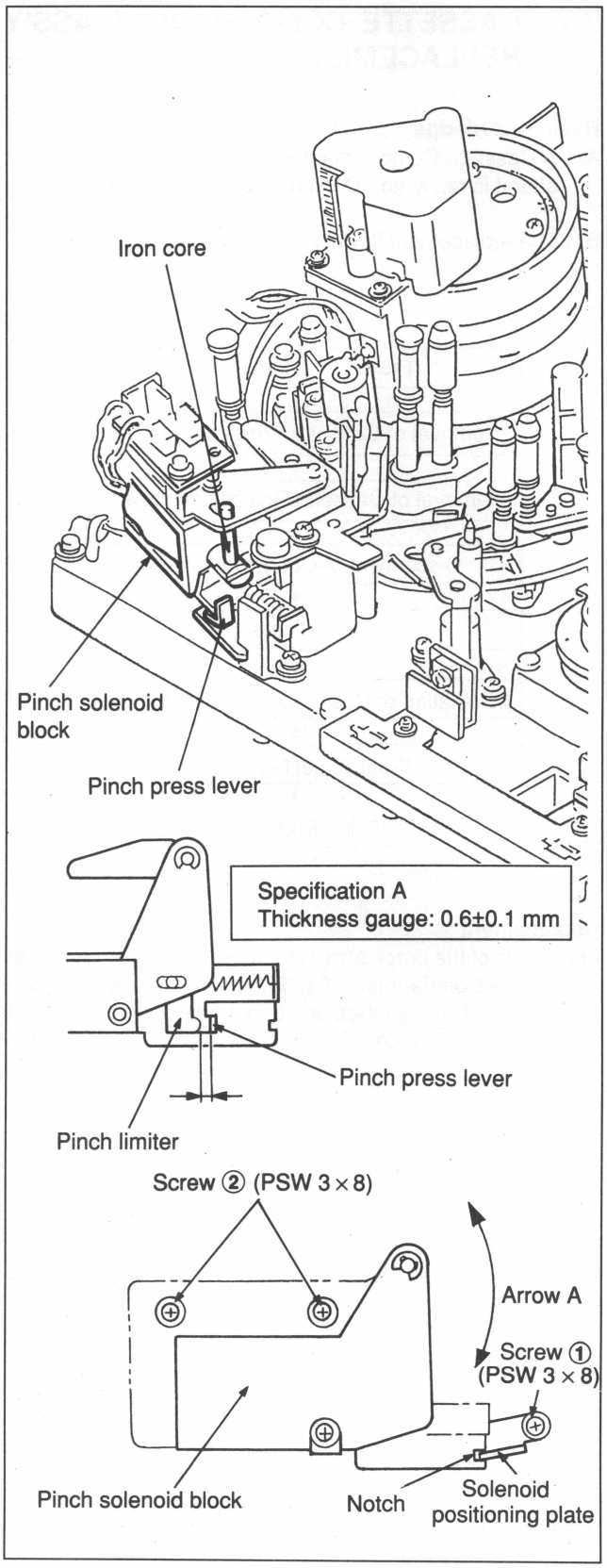

Fig. 7-6-2 Pinch Roller Press Block Position Adjustment

7-7. CASSETTE COMPARTMENT ASS'Y REPLACEMENT

Basic Knowledge

A. A Cassette Compartment Ass'y requires no adjustment after it is replaced. Confirm only the operation.

B. The replacement flowchart is as follows:

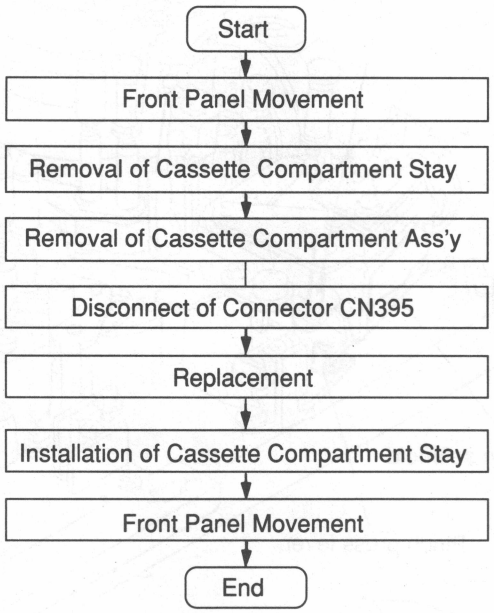

Replacement

For details of the procedure, refer to Section 2-7-1, Removal of Cassette Compartment. Fig. 7-7-1 shows the replacement procedure. The number in parentheses indicates the replacement procedure.

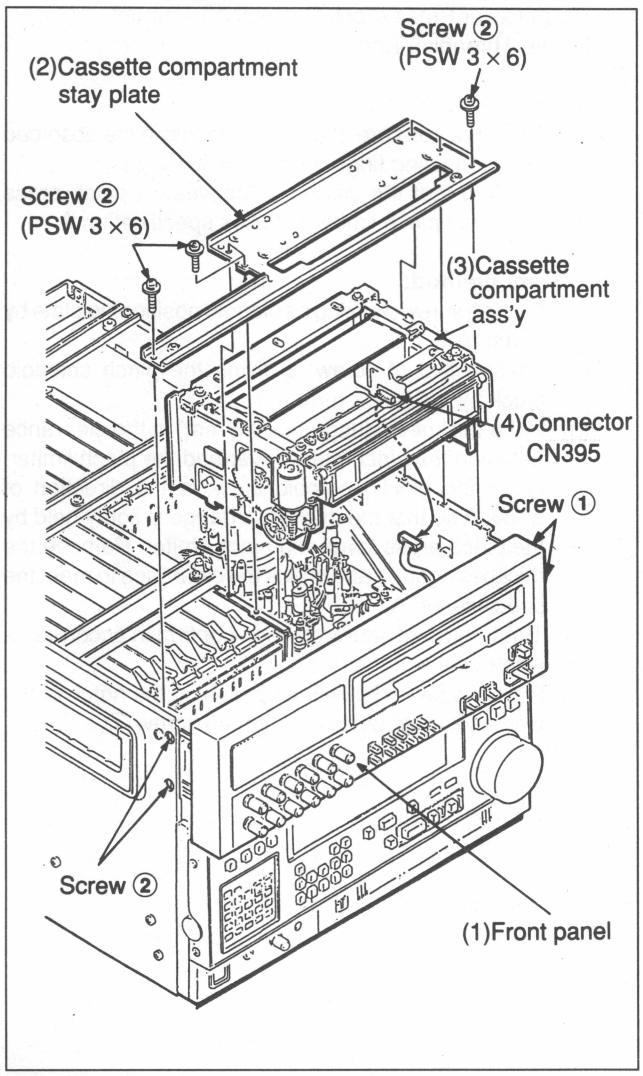

Fig. 7-7-1 Cassette Compartment Motor Replacement

7-8. REPLACEMENT OF CASSETTE COMPARTMENT COMPONENT PART

Basic Knowledge

A. The replacement procedures of the component part of the cassette compartment are explained as the following section. (Refer to Fig. 7-8-1.)
   7-8-1. Cassette Compartment Motor Replacement
   7-8-2. Cassette Compartment Worm Ass'y Replacement
   7-8-3. Cassette Compartment Lid/Lid Opening Gear Replacement
   7-8-4. Cassette Compartment Driving Gear (L)/Driving Arm Replacement
   7-8-5. Cassette Compartment Driving Gear (R)/Driving Arm Replacement

B. The component parts of the cassette compartment are replaced after the cassette compartment ass'y is removed from the unit.
   • For the removal of the cassette compartment, refer to Section 2-7-1.

C. The component part replacement is performed in the eject mode.

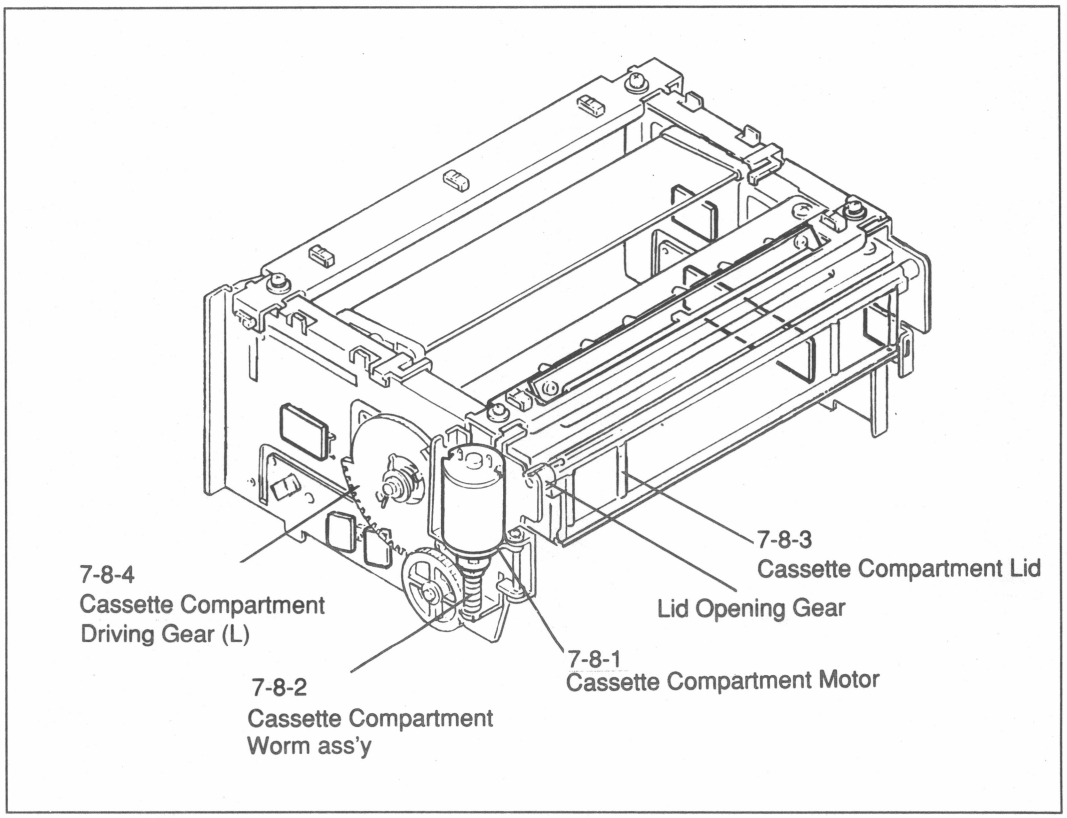

Fig. 7-8-1 Cassette Compartment Motor Replacement

7-8-1. Cassette Compartment Motor Replacement

Basic Knowledge

A. Refer to the basic knowledge of Section 7-8 before replacing the cassette compartment motor.

B. Prepare the following tool for replacement.
- Sony Grease (SGL-505)
  Sony Part No.: 7-662-010-04

C. The replacement flowchart is as follows:

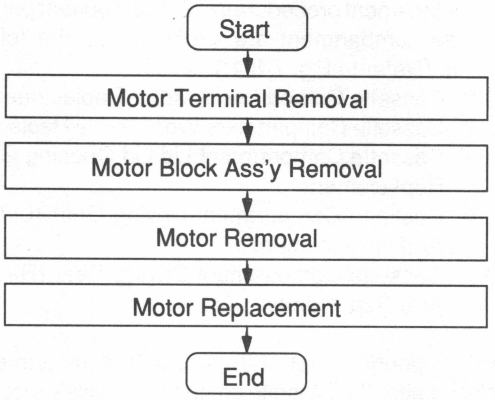

1. Motor Terminal Removal (Refer to Fig. 7-8-2.)
   (1) Cut the tubes on the terminal block of lead wires.
   (2) Remove the lead wires of the motor terminals using a soldering iron.

2. Motor Block Ass'y Removal (Refer to Fig. 7-8-2.)
   (1) Remove screw ①, then remove the compression spring that pushes a motor bracket.
   (2) Remove the E-ring and pull out a shaft in the direction of arrow A.
   (3) Move the motor block ass'y in the direction of arrow B and remove it from the unit.

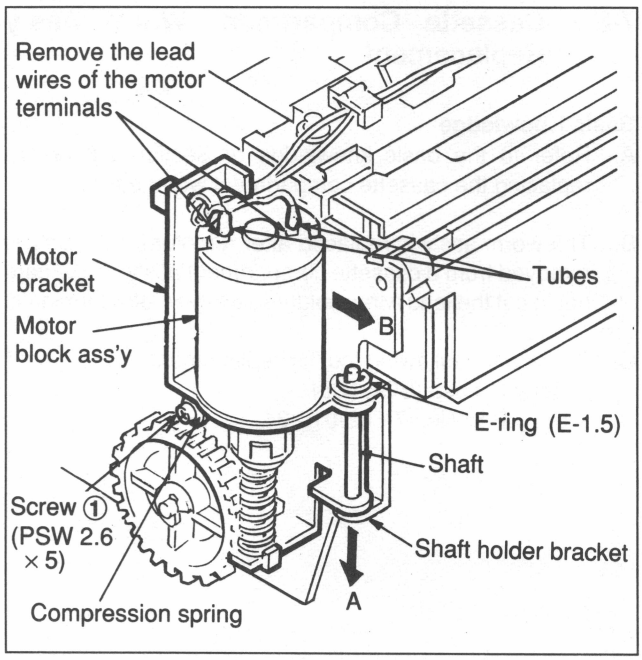

Fig. 7-8-2 Motor Block Ass'y Removal

3. Motor Removal (Refer to Fig. 7-8-3.)
   (1) Loosen screw ② of a stopper fixed on the motor shaft by 1 to 1/2 turn.
   (2) Remove two of screw ③ of the motor bracket fixing the motor.
   (3) Pull out the motor from the motor bracket, then remove.

4. Motor Replacement (Refer to Fig. 7-8-3.)
   (1) Position the ⊕ indication shown in detailed figure (a) on the motor bracket side.
   (2) Install the motor in the motor bracket with two of screw ③.
   Tightening torque: 7 to 10 kg.cm
   (3) Move the stopper in the direction of arrow C and tighten screw ②.
   Tightening torque: 4.5 to 6 kg.cm
   (4) Turn the stopper block in the direction of arrow D using fingers and confirm that it rotates smoothly.
   (5) Install the motor block ass'y in the reverse order of step 2.
   (6) Smear Sony grease slightly to the grooves of the worm gear.
   (7) Turn the stopper block in the direction of arrow D and confirm that it rotates smoothly.
   (8) Cover two lead wires (red and white) with heat shrink tube.
   (9) Solder a red lead wire on the ⊕ side of the motor terminal, and a white lead wire on the ⊖ side.
   (10) Move two tubes so as to cover the motor terminals, and then make the tubes contracted by heat.

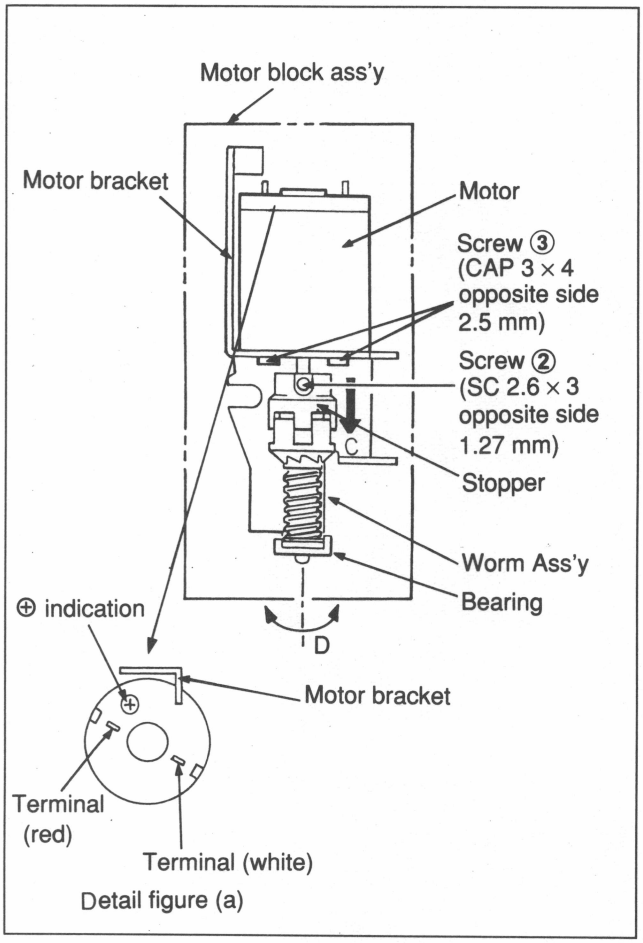

Fig. 7-8-3 Motor Removal/Replacement

7-8-2. Cassette Compartment Worm Ass'y Replacement

Basic Knowledge

A. Refer to the basic knowledge of Section 7-8 before replacing the cassette compartment worm ass'y.

B. The worm ass'y is replaced after a motor block ass'y is removed from a cassette compartment ass'y. Take care not to cut the lead wires soldered on the motor terminals.

C. Prepare the following tool for replacement.
- Sony Grease (SGL-505)
  Sony Part No.: 7-662-010-04

D. The replacement flowchart is as follows:

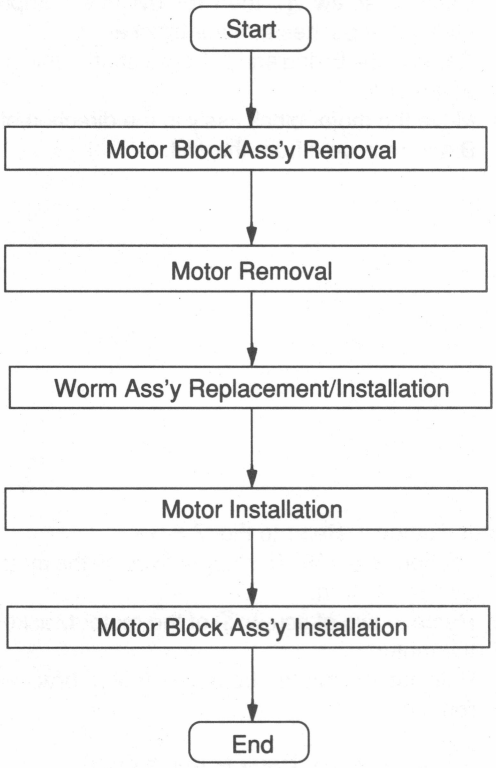

Replacement

1. Motor Block Ass'y Removal (Refer to Fig. 7-8-4.)
   (1) Remove screw ①, then remove the compression spring that pushes a motor bracket.
   (2) Remove the E-ring and pull out a shaft in the direction of arrow A.
   (3) Move the motor block ass'y in the direction of arrow B and remove it from the unit (with the lead wires connected).

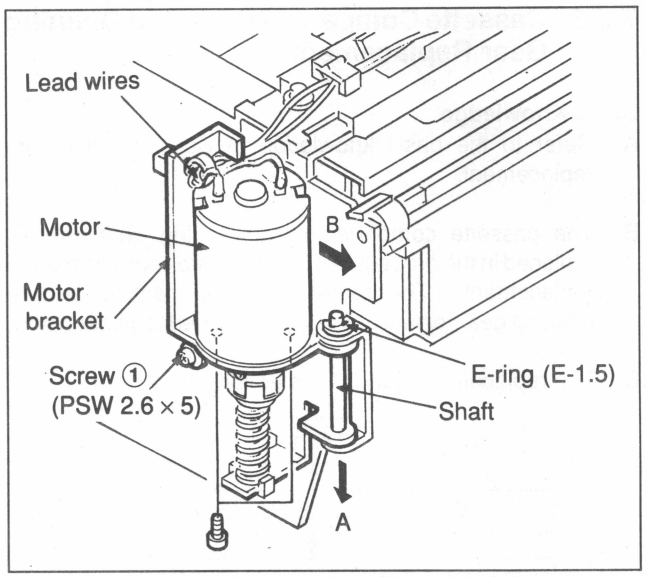

Fig. 7-8-4 Motor Block Ass'y Removal

2. Motor Removal (Refer to Fig. 7-8-5.)
   (1) Loosen screw ② of a stopper fixed on the motor shaft by 1 to 1/2 turn.
   (2) Remove two screws ③ of the motor bracket fixing the motor.
   (3) Pull out the motor from the motor bracket, then remove.

3. Worm Ass'y Replacement/Installation (Refer to Fig. 7-8-5.)
   (1) Remove the stopper and the worm ass'y.
   (2) Engage the worm ass'y to be replaced with the stopper and insert it into the motor bracket.

4. Motor Installation (Refer to Fig. 7-8-5.)
   (1) Install the motor in the motor bracket with two of screw ③.
   Tightening torque: 7 to 10 kg.cm
   (2) Move the stopper in the direction of arrow C and tighten screw ②.
   Tightening torque: 4.5 to 6 kg.cm
   (3) Turn the stopper block in the direction of arrow D using fingers and confirm that it rotates smoothly.

5. Motor Block Ass'y Installation
   (1) Install the motor block ass'y in the reverse order of step 1.
   (2) Smear Sony grease slightly to the grooves of the worm gear.
   (3) Turn the stopper block in the direction of arrow D using fingers and confirm that it rotates smoothly.

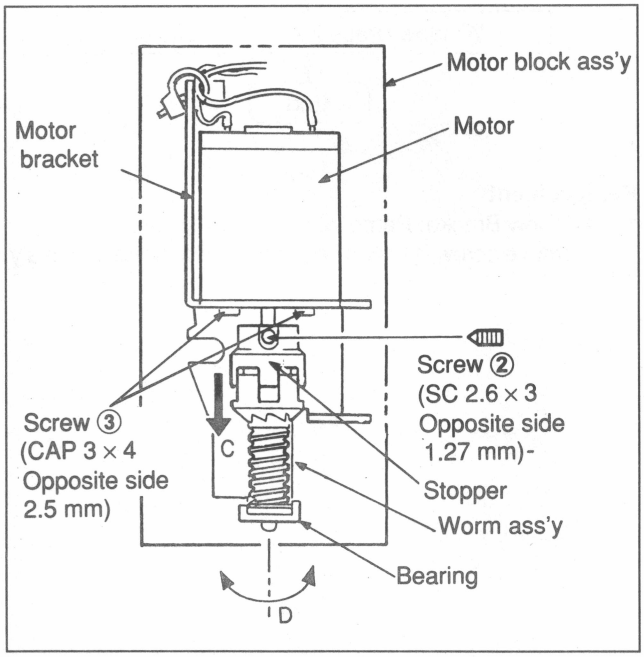

Fig. 7-8-5 Worm Ass'y Replacement

7-8-3. Cassette Compartment Lid/Lid Opening Gear Replacement

Basic Knowledge

A. Refer to the basic knowledge of Section 7-8 before replacement.

B. The cassette compartment lid opening gear can be replaced in the procedure of the cassette compartment lid replacement. The cassette compartment lid and lid opening gear replacements are described together below.

C. The replacement flowchart is as follows:

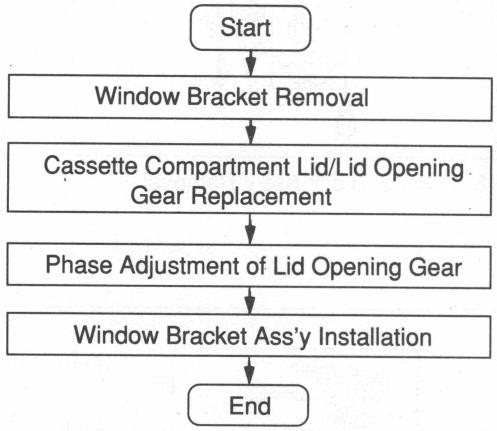

Replacement

1. Window Bracket Removal (Refer to Fig. 7-8-6.)
   Remove screw ①, then remove a window bracket ass'y.

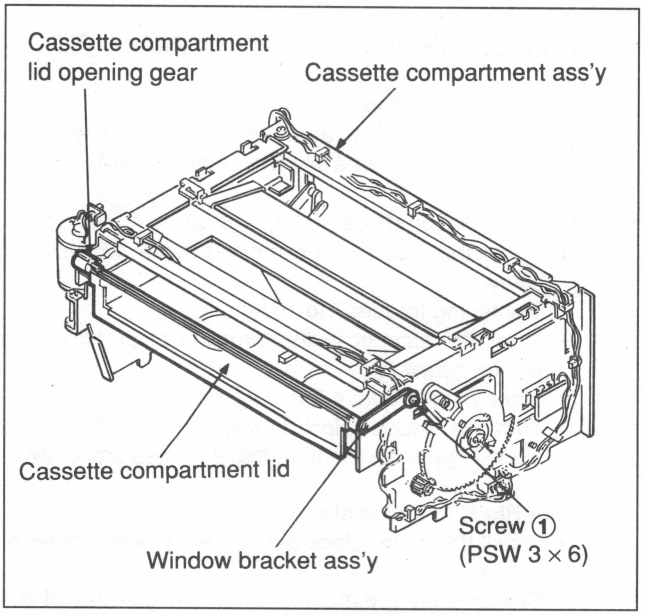

Fig. 7-8-6 Cassette Compartment Lid Removal

2. Cassette Compartment Lid/Lid Opening Gear Removal (Refer to Fig. 7-8-7.)
   Remove a cassette compartment lid from the cassette compartment ass'y, then remove a lid opening gear as shown in the figure. Replace the defective component part.

3. Lid Opening Gear Installation
   Install a lid opening gear in the cassette compartment lid.

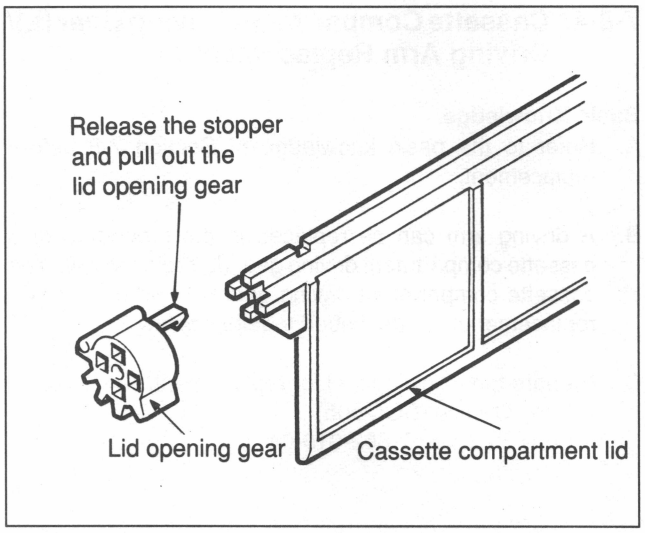

Fig. 7-8-7 Cassette Compartment Lid/Lid Opening Gear Removal

4. Phase Adjustment of Lid opening gear
   Align the phase of the lid opening gear with that of a lid opening arm as shown in Fig. 7-8-8.

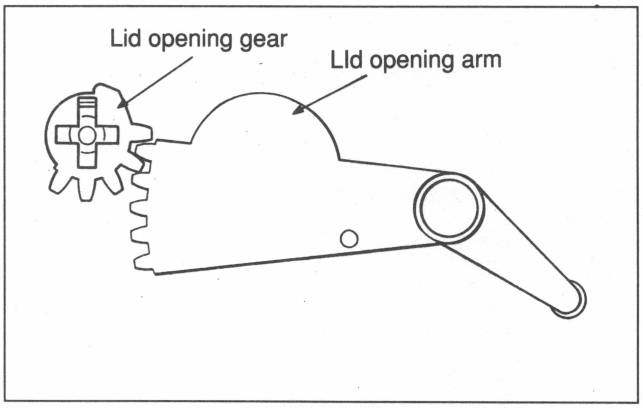

Fig. 7-8-8 Phase Adjustment of Lid Opening Gear

5. Window Bracket Ass'y Installation (Refer to Fig. 7-8-9.)
   Insert the pin of the window bracket ass'y into the cassette compartment lid. Secure the window bracket ass'y with screw ①.

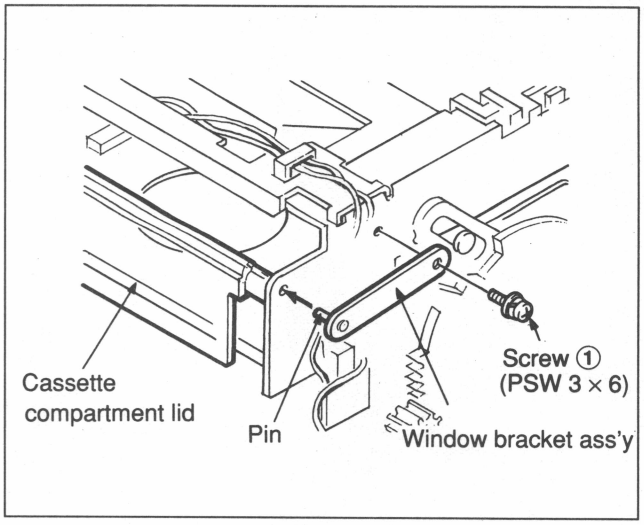

Fig. 7-8-9 Window Bracket Ass'y Installation

7-8-4. Cassette Compartment Driving Gear (L)/ Driving Arm Replacement

Basic Knowledge

A. Refer to the basic knowledge of Section 7-8 before replacement.

B. A driving arm can be replaced in the procedure of a cassette compartment driving gear (L) replacement. The cassette compartment driving gear (L) and driving arm replacements are described together below.

C. Prepare the following tool for replacement.
- Sony Grease (SGL-505)
  Sony Part No.: 7-662-010-04

D. The replacement flowchart is as follows:

Replacement

1. Intermediate Gear Removal (Refer to Fig. 7-8-10.)
   Remove E-ring ① and a intermediate gear.

2. Driving Gear (L) Ass'y Removal (Refer to Fig. 7-8-10.)
   Remove E-ring ②, washer, and spring holder, then remove a driving gear (L) ass'y.

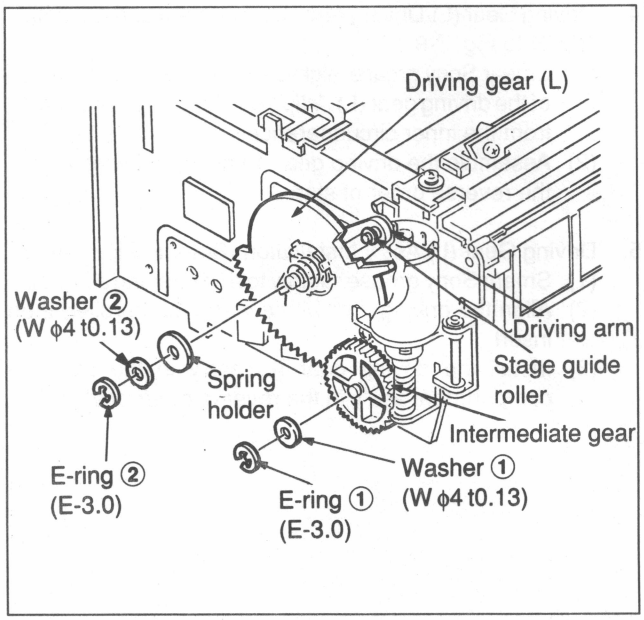

Fig. 7-8-10 Driving Gear (L) Removal

3. Driving Arm Removal (Refer to Fig. 7-8-11.)
   (1) Remove a limiter spring (L) from the spring stop boss. Then, remove the limiter spring (L).
   (2) Turn a driving arm and align the three convex portions of the driving arm with the three square holes of the driving gear (L). Then, pull out the driving arm.

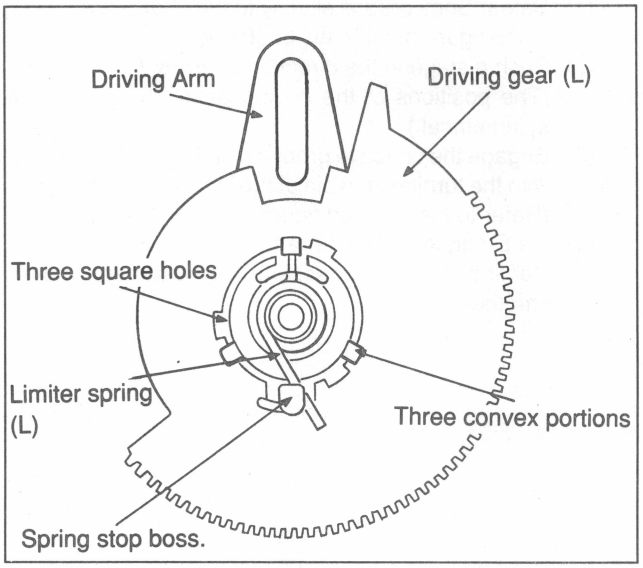

Fig. 7-8-11 Driving Arm Removal

4. Driving Gear (L)/Driving Arm Replacement and Assembly (Refer to Fig. 7-8-12.)
   (1) Smear Sony grease slightly to the inner circumference of the driving gear (L). Wipe out the grease protruding from the inner circumference.
   (2) Assemble the driving gear (L) and the driving arm in the reverse order of step 3.

5. Driving Gear (L) Ass'y Installation (Refer to Fig. 7-8-12.)
   (1) Smear Sony grease slightly to a lid opening arm boss.
   (2) Align the driving arm with a stage guide roller, then insert.
   (3) Install the driving gear (L) ass'y in the cassette compartment ass'y in the reverse order of step 2.

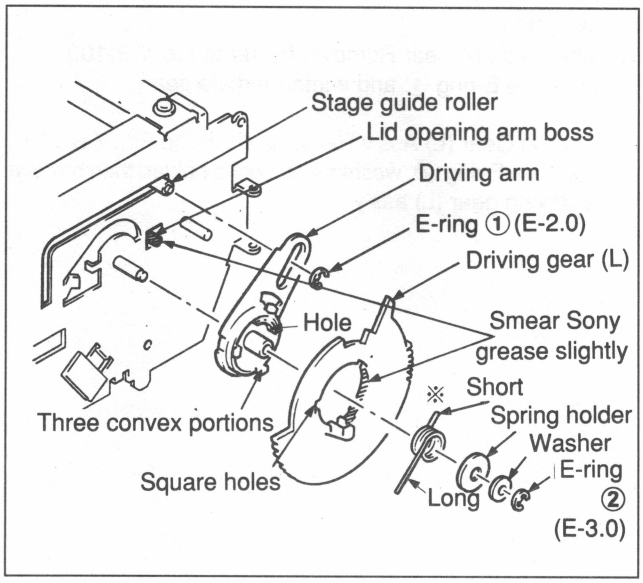

Fig. 7-8-12 Driving Gear (L) Installation

6. Intermediate Gear Installation (Refer to 7-8-13.)
   (1) Smear Sony grease slightly to the gear block shown in the figure at intervals of 90 degrees.
   (2) Push a stage in the direction of arrow A. (The positions of the driving gear (R) and (L) are symmetrical.)
   (3) Engage the concave groove of the intermediate gear with the turning stop pin of the joint shaft, then insert. (Refer to the detailed figure.)
   (4) Fix E-ring in the joint shaft, then install.
   (5) Confirm that the cassette compartment moves smothly.

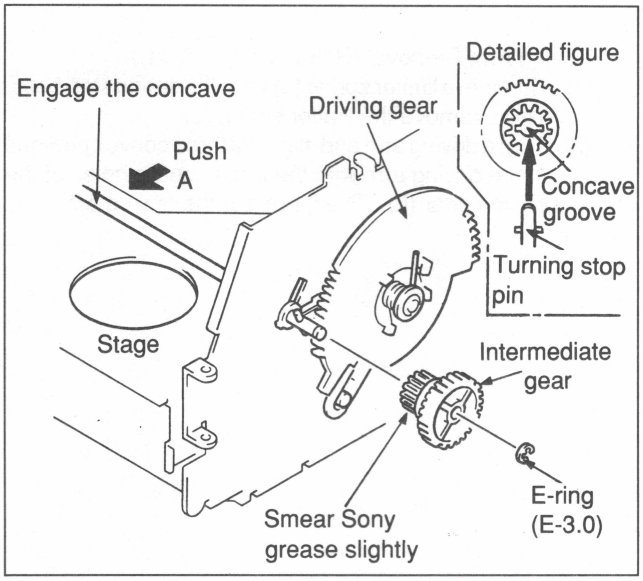

Fig. 7-8-13 Intermediate Gear Installation

7-8-5. Cassette Compartment Driving Gear (R)/ Driving Arm Replacement

Basic Knowledge

A. Refer to the basic knowledge of Section 7-8 before replacement.

B. The driving arm can be replaced in the procedure of a cassette compartment driving gear (R) replacement. The cassette compartment driving gear (R) and driving arm replacements are described together below.

C. Prepare the following tool for replacement.
- Sony Grease (SGL-505)
  Sony Part No.: 7-662-010-04

D. The replacement flowchart is as follows:

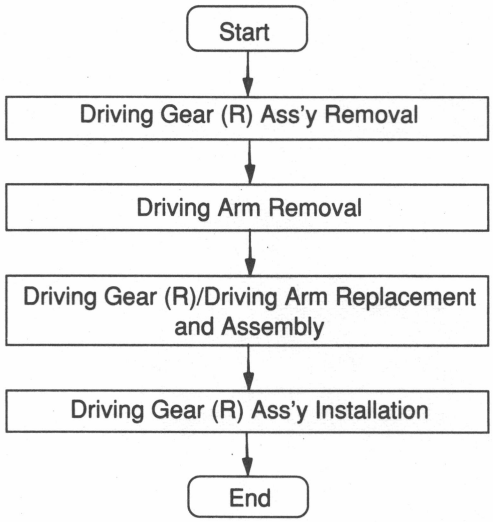

Replacement

1. Driving Gear (R) Ass'y Removal (Refer to Fig. 7-8-14.)
   Remove the E-ring and the spring holder, then remove a driving gear (R) ass'y.

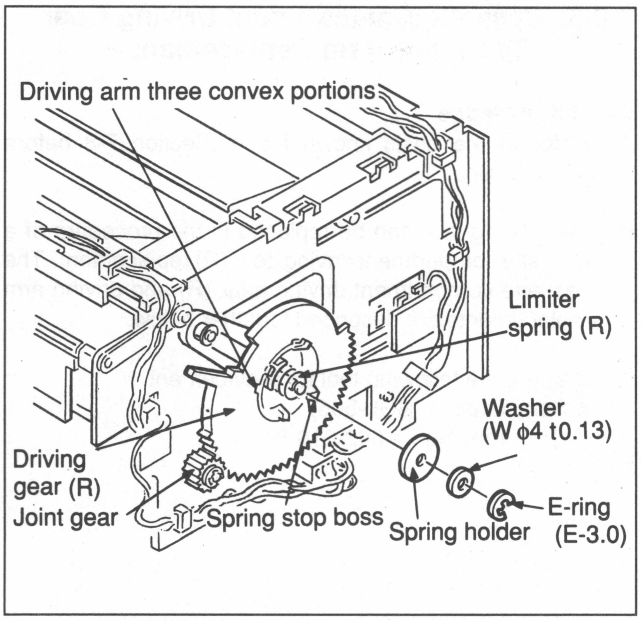

Fig. 7-8-14 Driving Gear (R) Removal

2. Driving Arm Removal (Refer to Fig. 7-8-15.)
   (1) Remove the limiter spring (R) from the spring stop boss. Then, remove the limiter spring (R).
   (2) Turn the driving arm and align the three convex portions of the driving arm with the three square holes of the driving gear (R). Then, pull out the driving arm.

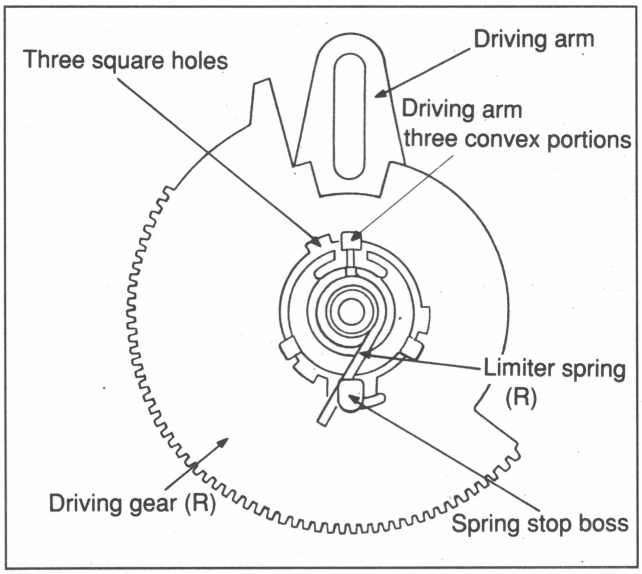

Fig. 7-8-15 Driving Arm Removal

3. Driving Gear (R)/Driving Arm Replacement and Assembly (Refer to Fig. 7-8-16.)
   (1) Smear Sony grease slightly to inner circumference of the driving gear (R). Wipe out the grease protruding from the inner circumference.
   (2) Assemble the driving gear (R) and driving arm in the reverse order of step 2.

4. Driving Gear (R) Ass'y Installation (Refer to Fig. 7-8-16.)
   (1) Push the stage in the direction of arrow A.
   (2) Engage the driving arm with a stage guide roller, then insert.
   (3) Install the driving gear (R) ass'y in the cassette compartment ass'y in the reverse order of step 1.
   (4) Confirm that cassette compartment moves smoothly.

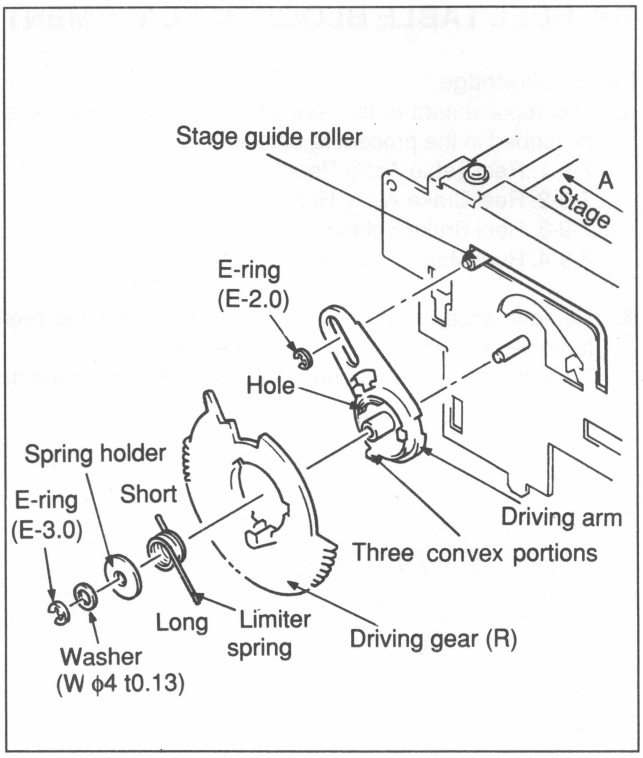

Fig. 7-8-16 Driving Gear (R) replacement and assembly

7-9. REEL TABLE BLOCK REPLACEMENT

Basic Knowledge

A. The replacement of the reel table block components is described in the procedure below.
   7-9-1. Reel Table Ass'y Replacement
   7-9-2. Reel Brake Ass'y Replacement
   7-9-3. Reel Brake Solenoid Replacement
   7-9-4. Reel Motor Replacement

B. Remove a cassette compartment ass'y when the reel table block components are replaced.
   Refer to Section 2-7, Removal of Cassette Compartment.

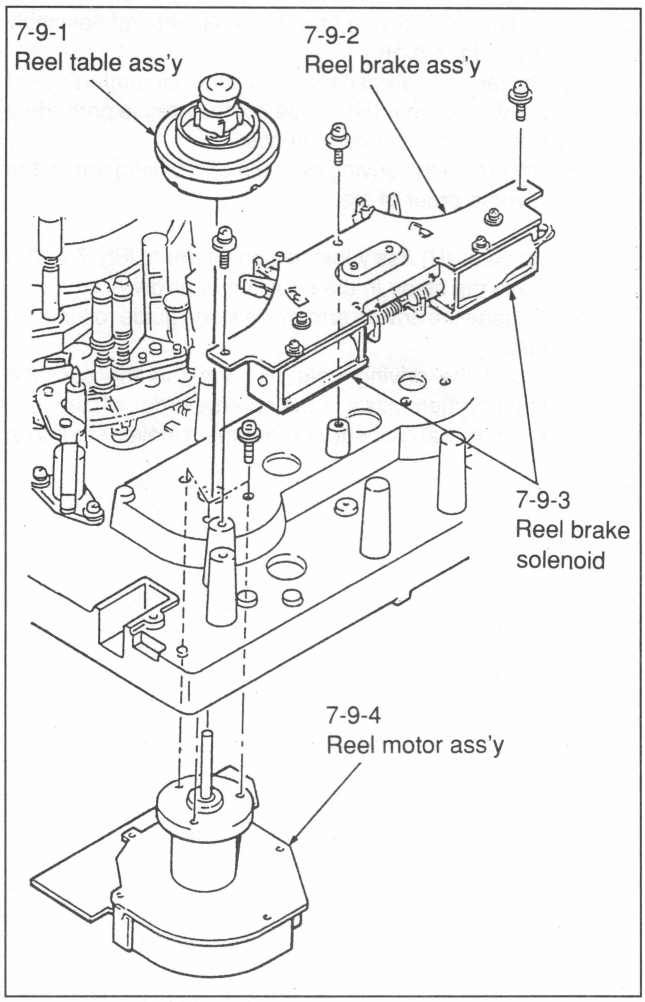

Fig.7-9 Reel Table Block

7-9-1. Reel Table Ass'y Replacement

Basic Knowledge

A. Refer to the basic knowledge of Section 7-9 before replacing a reel table ass'y.

B. The supply (S) and take-up (T) sides have one reel table ass'y each. The same reel table ass'y is used at both sides.

C. Prepare the following tools for replacement and adjustment.
- Reference plate
  Sony Part No.: J-6255-830-A
- Reel table height adjustment tool
  Sony Part No.: J-6256-230-A
- Cleaning fluid (or an equivalent)
  Sony Part No.: 9-919-573-00

D. The replacement flowchart is as follows:

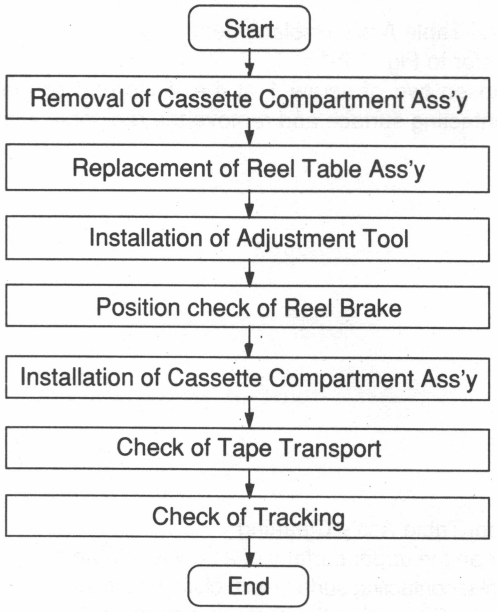

Replacement

1. Cassette Compartment Ass'y Removal
   Remove the cassette compartment ass'y referring to Section 2-7-1.

2. Reel Table Ass'y Replacement
   (Refer to Fig. 7-9-1.)
   Loosen two of screw 1 at the lower part of the brake contacting surface and remove the reel table ass'y.

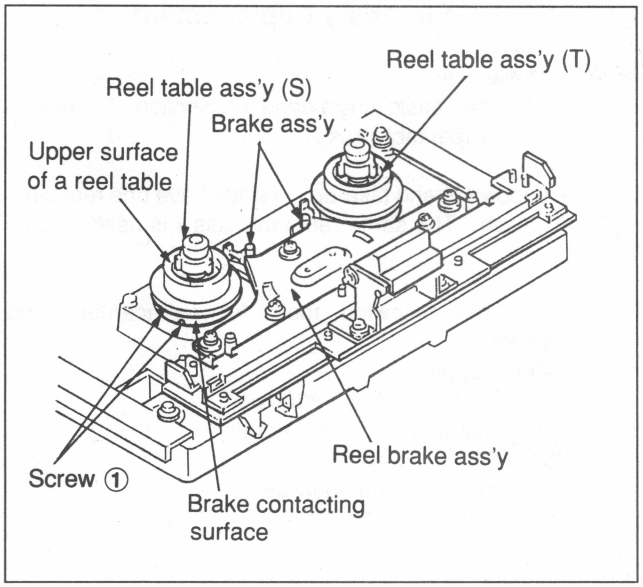

Fig. 7-9-1 Reel Table Removal

3. Reel Table Ass'y Cleaning
   Clean the upper surface of a new reel table ass'y and the brake contacting surface with cloth moistened with cleaning fluid. Then, wipe the surface with dry cloth two or three times.

4. Adjustment Tool Cleaning (Refer to Fig. 7-9-2.)
   Clean the installation surfaces of the reference plate (DM-583) and base plate, as well as the reel table height adjustment tool (DM-650), with cloth moistened with cleaning fluid.

5. Reel Table Ass'y Installation
   (1) Loosen the two reel table ass'y screws (shown as the two screws ① in Fig. 7-9-1) and mount the reel table ass'y on the motor shaft. (Do not tighten the two screws ① yet.)
   (2) Mount the reference plate on the base plate in the position shown in Fig. 7-9-2.

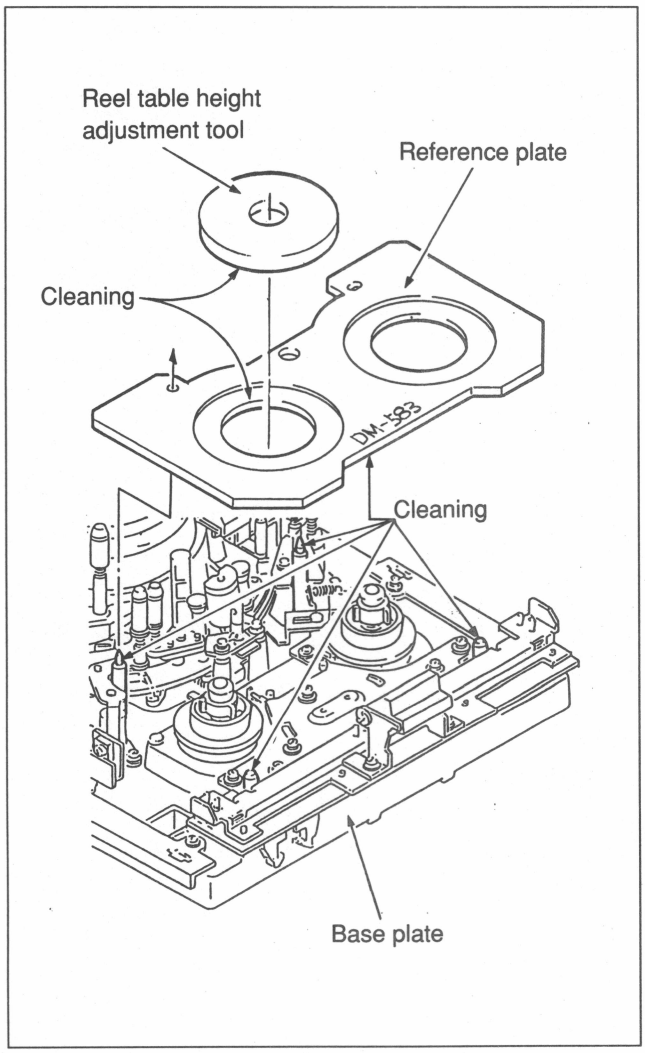

Fig. 7-9-2 Adjustment Tool Installation

(3) Place the reel table height adjustment tool on the reference plate, on top of the reel table ass'y. (Refer to Fig. 7-9-3.)
(4) Move the reel table ass'y upwards so that the upper surface of the reel table comes firmly in contact with the reel table height adjustment tool. Then tighten the two screws ① (set screws). (Refer to Detail figure (a).)
Tightening torque: 7 ~ 10 kg/cm.

Note: Do not raise the reel table ass'y too far. The reel table height adjustment tool should not be lifted above the reference plate.

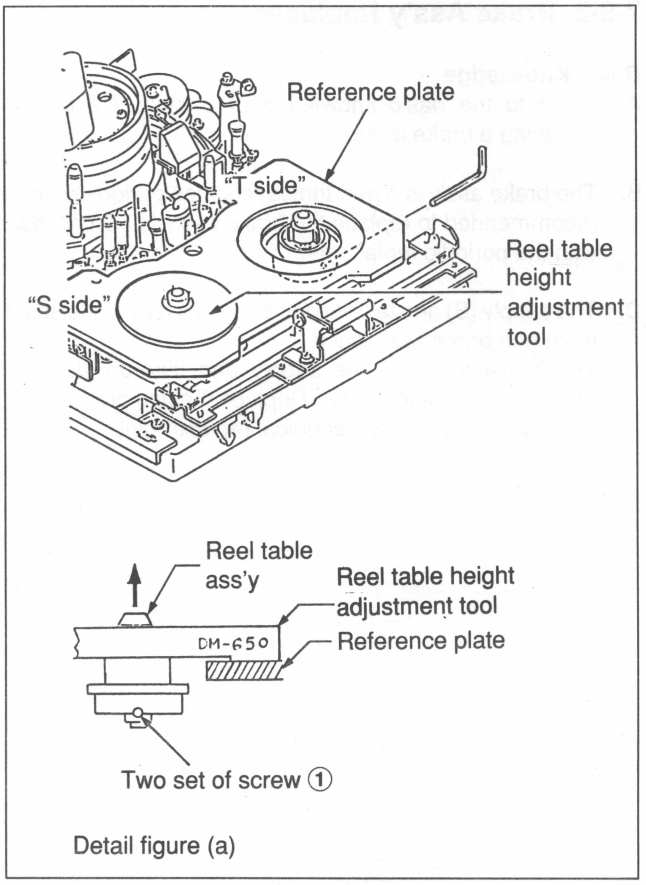

Fig. 7-9-3 Reel Table Height Adjustment

6. Reel Brake Position Check (Refer to Fig. 7-9-4.)
(1) Using fingers, rotate the reel table of the supply (S) side clockwise and the reel table of the take-up (T) side counterclockwise.
Check that clearances between the reel brake knobs of the take-up side and the supply side and brake ass'y plate are nothing, and after separating the fingers there are clearances between them.
(2) Check that the clearances between the knobs and the brake ass'y plate satisfy specification (A).
Specification (A): Clearance of 1.2 ± 0.4 mm
(3) If the above specifications are not satisfied, perform the reel brake position adjustment in step 9 of Section 7-9-2, Brake Ass'y Replacement.

7. Cassette Compartment Ass'y Installation
Refer to Section 2-7-1.

8. Perform the Check of Tape Transport
Refer to Section 8-3-1.

9. Perform the Check of Tracking
Refer to Section 8-5-1.

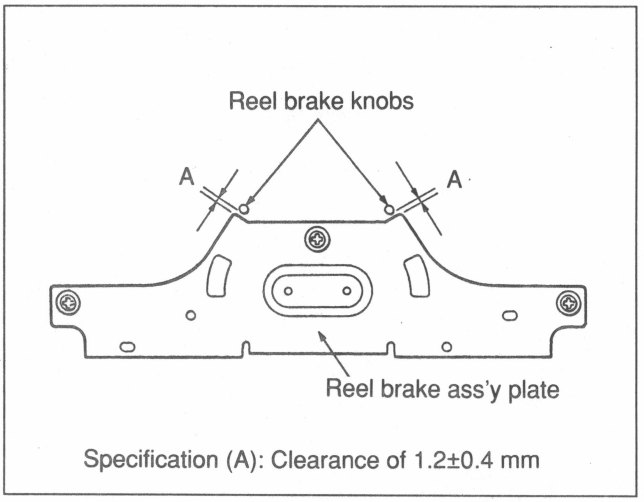

Fig. 7-9-4 Reel Brake Position Check

7-9-2. Brake Ass'y Replacement

Basic Knowledge

A. Refer to the basic knowledge of Section 7-9 before replacing a brake ass'y.

B. The brake ass'y is a part that is replaced periodicly. It is recommended to replace the brake ass'y in accordance with the periodic replacement list.

C. The supply (S) and take-up (T) sides of a reel brake ass'y have one brake ass'y each.
The brake ass'y on the supply and take-up sides is replaced in the same way. Replace the two brake ass'y simultaneously during periodical replacement.

D. The replacement flowchart is as follows:

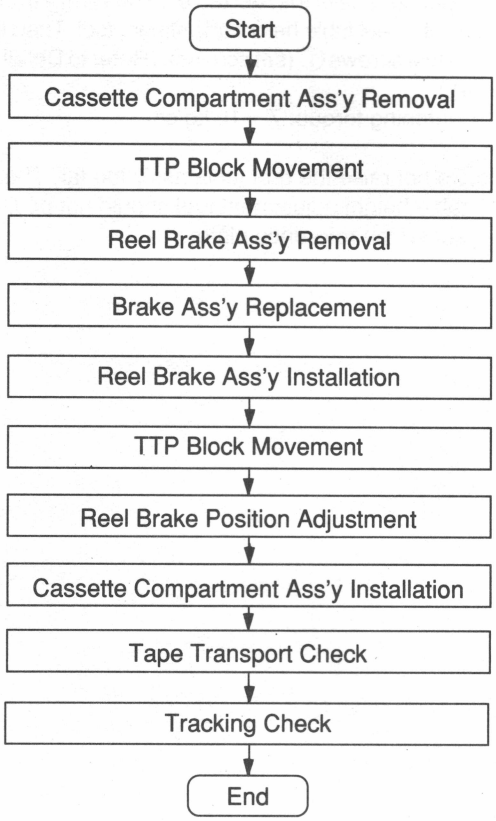

Replacement

1. Cassette Compartment Ass'y Removal
   Remove the cassette compartment ass'y referring to Section 2-7-1.

2. TTP Block Movement
   For details of the procedure, refer to Section 2-8, Mechanical Deck Opening and Closing.
   Fix the TTP block in the 60-degree position.

3. Brake Solenoid Harness Removal
   (Refer to Fig. 7-9-5.)
   Disconnect brake solenoid connectors CN391 (on the supply side) and CN392 (on the take-up side) from RM-68 board.

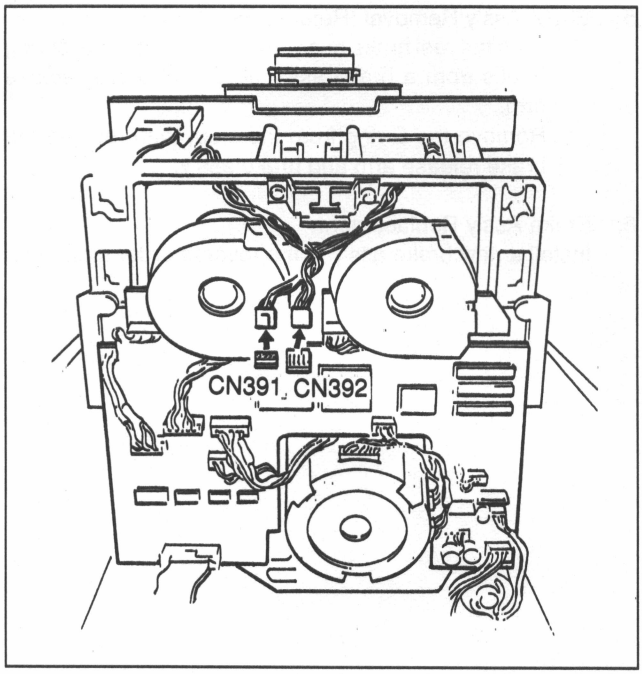

Fig. 7-9-5 Brake Solenoid Harness Removal

4. Reel Brake Ass'y Removal (Refer to Fig. 7-9-6.)
   (1) Remove three of screw ① fixing a reel brake ass'y.
   (2) Hold the knobs of the reel brake ass'y using fingers and remove the reel brake ass'y.

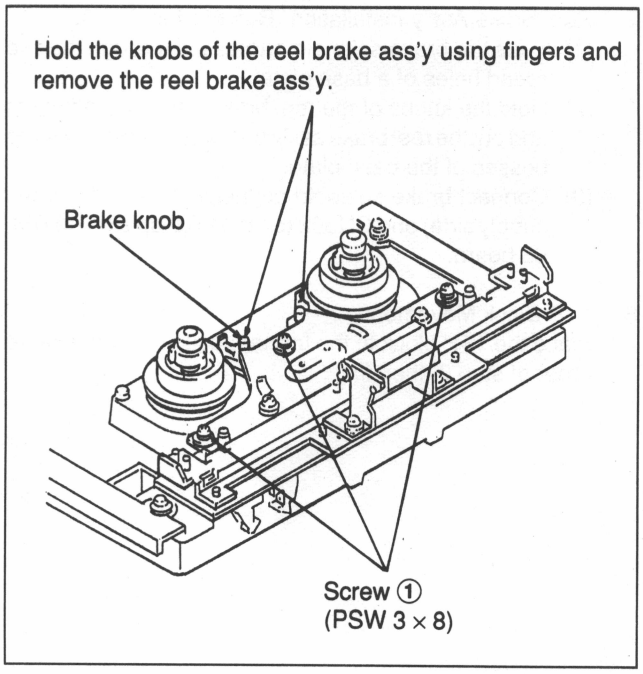

Fig. 7-9-6 Reel Brake Ass'y Removal

5. Brake Ass'y Removal (Refer to Fig. 7-9-7.)
   (1) Turn the reel brake ass'y over and remove the spring hooks from a brake ass'y plate and brake release arm.
   (2) Remove the E-ring from the stud, then remove the brake release arm and brake ass'y.

6. Brake Ass'y Replacement
   Install a new brake ass'y in the reverse order of step 5.

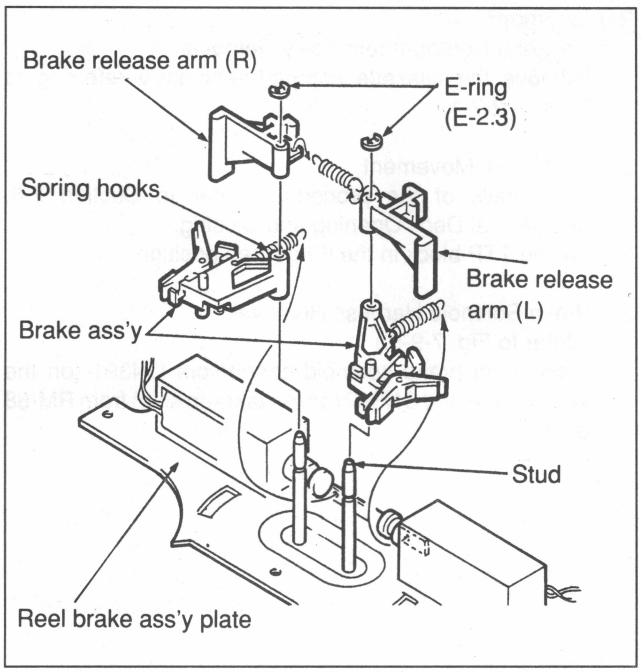

Fig. 7-9-7 Brake Ass'y Removal

7. Reel Brake Ass'y Installation (Refer to Fig. 7-9-8.)
   (1) Pass the brake solenoid harnesses through the two round holes of a base plate.
   (2) Hold the knobs of the reel brake ass'y using fingers and put the reel brake ass'y on the surface of the three bosses of the base plate.
   (3) Connect brake solenoid connectors CN391 (on the supply side) and CN392 (on the take-up side) to RM-68 board.

8. TTP Block Movement
   Place the TTP block to the former position in the reverse order of step 2, then fix.

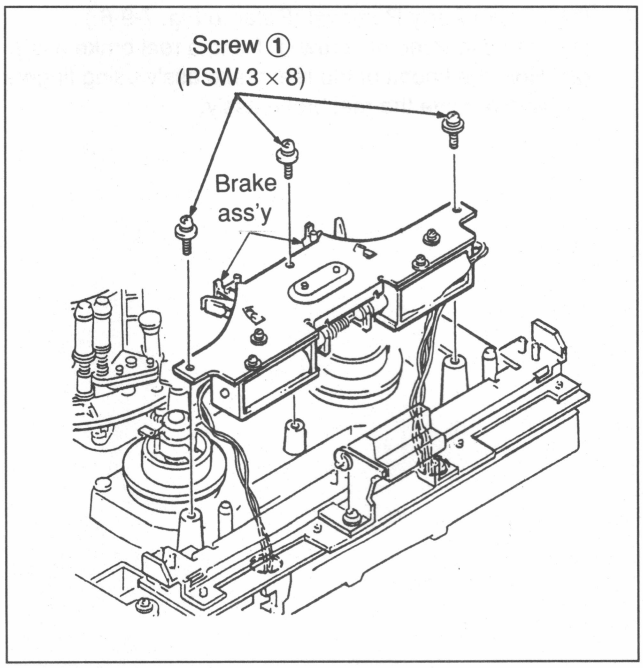

Fig. 7-9-8 Reel Brake Ass'y Installation

9. Reel Brake Position Adjustment (Refer to Fig. 7-9-9.)
   (1) Secure the reel brake ass'y with three of screw ① snugly, but do not tighten.
   (2) Using fingers, rotate the reel table of the supply (S) side clockwise and the reel table of the take-up (T) side counterclockwise.
   Check that clearances between the reel brake knobs of the take-up side and the supply side and brake ass'y plate are nothing, and after separating the fingers there are clearances between them.
   (3) Move the reel brake ass'y in every direction and adjust the position so that the clearances between the knobs and brake ass'y plate satisfy specification (A).
   (4) Tighten three of screw ①.
   (5) Using fingers, rotate the reel table as step (2) again by one to two turns.

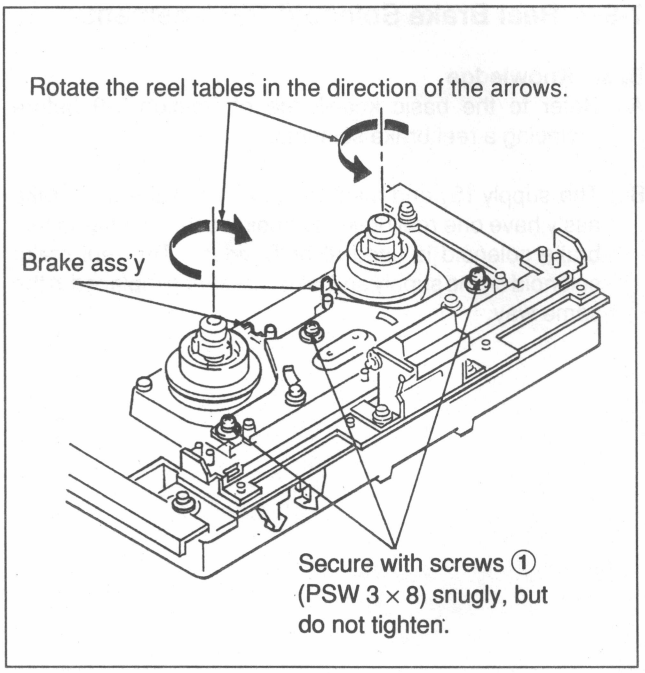

Fig. 7-9-9 Reel Brake Position Adjustment

   (6) Confirm that the clearances between the knobs and brake ass'y plate satisfy specification (A).
   Specification (A): Clearance of 1.2 ± 0.4 mm

   If the above specifications are not satisfied, readjust steps (1) and later.

10. Cassette Compartment Ass'y Installation
    Refer to Section 2-7-1.

11. Perform the Check of Tape Transport.
    Refer to Section 8-3-1.

12. Perform the Check of Tracking .
    Refer to Section 8-5-1.

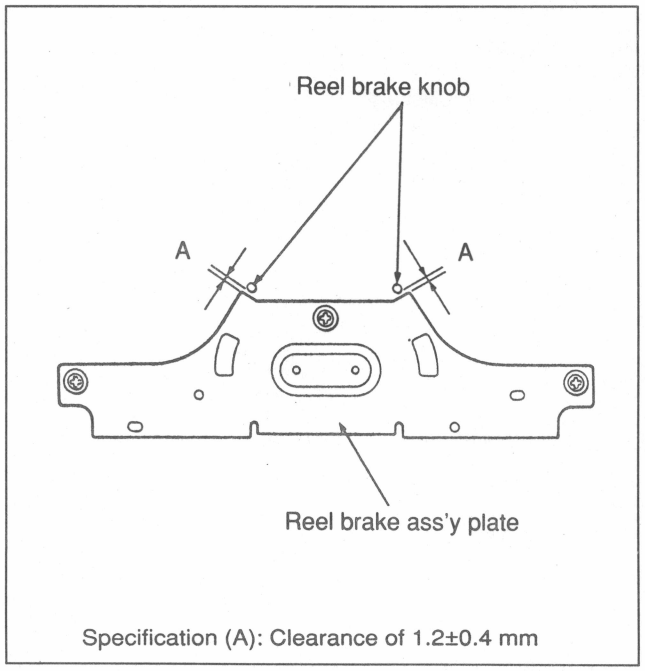

Fig. 7-9-10 Reel Brake Position Check

7-9-3. Reel Brake Solenoid Replacement

Basic Knowledge

A. Refer to the basic knowledge of Section 7-9 before replacing a reel brake solenoid.

B. The supply (S) and take-up (T) sides of the reel brake ass'y have one reel brake solenoid each. The same reel brake solenoid is used at both sides. The reel brake solenoid on the supply and take-up sides is replaced in the same way.

C. The replacement flowchart is as follows:

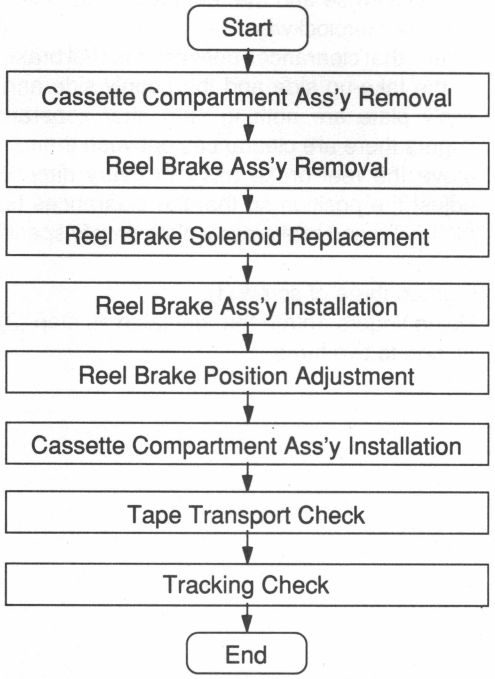

Replacement

1. Perform steps 1 through 4 of Section 7-9-2, Brake Ass'y Replacement.
   - Cassette compartment ass'y removal
   - TTP block movement
   - Brake solenoid harness extraction
   - Reel brake ass'y removal

2. Reel Brake Solenoid Replacement
   (Refer to Fig. 7-9-11.)
   (1) Remove two of screw ① and the reel brake solenoid.
   (2) Install the iron core of a new reel brake solenoid to the convex portion of a brake release arm.
   (3) Secure the reel brake solenoid with two of screw ①.

3. Reel Brake Ass'y Installation/Position Adjustment
   Perform steps 7 through 12 of Section 7-9-2, Brake Ass'y Replacement.
   - Reel brake ass'y installation
   - TTP block movement (Return the block to the former position.)
   - Reel brake position adjustment
   - Cassette compartment ass'y installation
   - Tape transport check
   - Tracking check

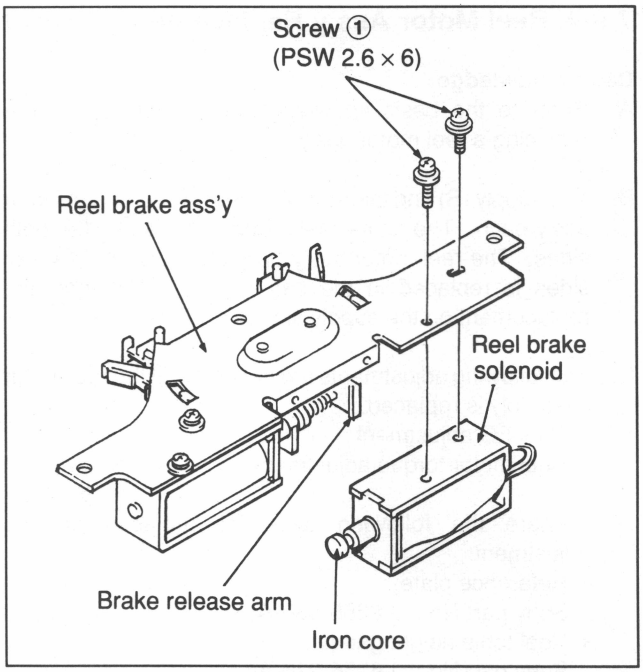

Fig. 7-9-11 Reel Brake Solenoid Replacement

7-9-4. Reel Motor Ass'y Replacement

Basic Knowledge

A. Refer to the basic knowledge of Section 7-9 before replacing a reel motor ass'y.

B. The supply (S) and take-up (T) sides have one reel motor ass'y each. The same reel motor ass'y is used at both sides. The reel motor ass'y on the supply and take-up sides is replaced in the same way. Therefore, the replacement on the supply side is explained below.

C. The following adjustments are necessary if the reel motor assembly is replaced.
- Reel FG adjustment
- Reel motor torque adjustment

D. Prepare the following tools for replacement and adjustment.
- Reference plate
  Sony part No.: J-6255-830-A
- Reel table height gauge
  Sony part No.: J-6256-230-A
- Cleaning fluid (or an equivalent)
  Sony part No.: J-6256-230-A
- Cloth (or Gauze)
- Tentelometer
- Oscilloscope

E. The replacement flowchart is as follows:

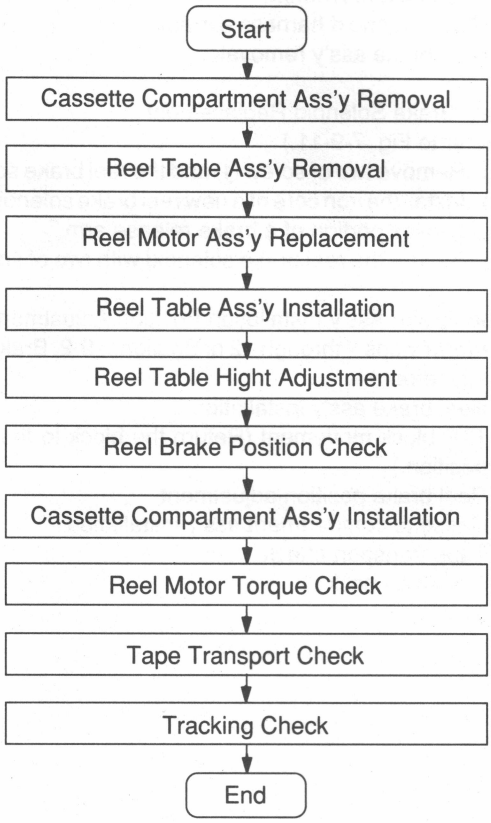

Replacement

1. Cassette Compartment Ass'y Removal
   Remove a cassette compartment ass'y referring to Section 2-7-1.

2. TTP Block Movement
   Fix a TTP block in the 60-degree position referring to Section 2-8, "Mechanical Deck Opening and Closing."

3. Reel Motor Connector Disconnection
   (Refer to Fig. 7-9-12.)
   Disconnect two connectors on a reel motor board (RM-68 board).
   - For supply-side reel motor
     Disconnect connectors CN4S (12 pin) and CN5S (4 pin).
   - For take-up side reel motor
     Disconnect connectors CN4T (12 pin) and CN5T (4 pin).

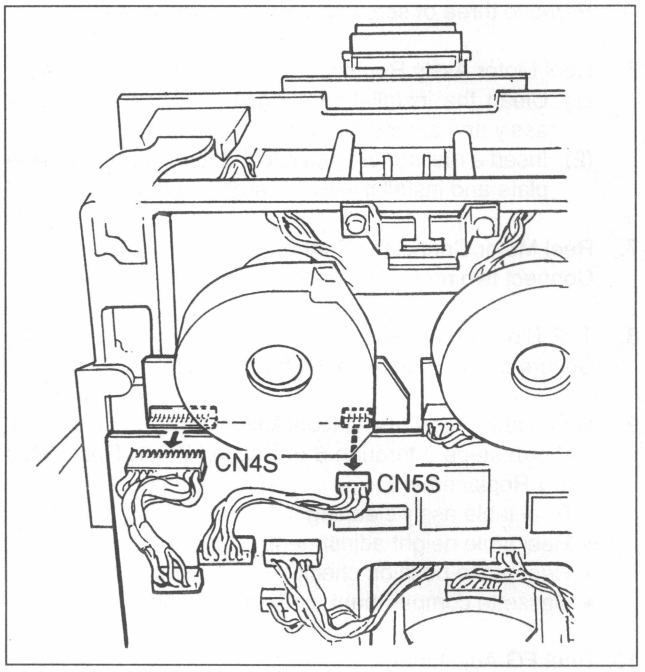

Fig. 7-9-12 Reel Motor Connector Disconnection

4. Reel Table Ass'y Removal (Refer to Fig. 7-9-13.)
   Loosen two screws ① at the lower part of a brake contacting surface and remove a reel table ass'y.

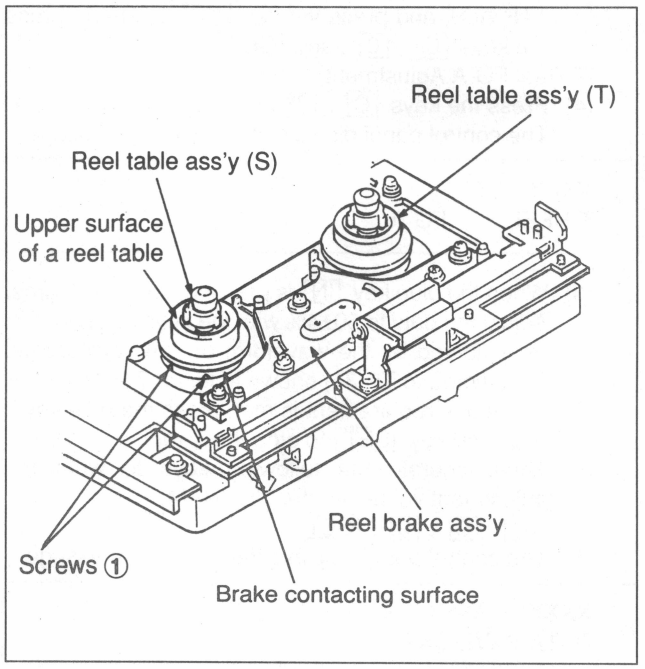

Fig. 7-9-13 Reel Table Ass'y Removal

5. Reel Motor Ass'y Removal (Refer to Fig. 7-9-14.)
Remove three of screw ② and a reel motor ass'y.

6. Reel Motor Ass'y Replacement (Refer to Fig. 7-9-14.)
   (1) Clean the installation surface of a new reel motor ass'y and a base plate.
   (2) Insert a reel motor shaft into the round hole of a base plate and install it with three of screw ②.

7. Reel Motor Connector Connection
Connect two reel motor connectors.

8. TTP Block Movement
Secure the TTP block to the former state.

9. Reel Table Ass'y Installation/Adjustment
Perform steps 3 through 6 of Section 7-9-1, Reel Table Ass'y Replacement.
   - Reel table ass'y cleaning
   - Reel table height adjustment
   - Reel brake position check
   - Cassette compartment ass'y installation

10. Reel FG Adjustment
   (1) Open the control panel 90 degrees, and connect an oscilloscope to TP-31 on the SV-116 circuit board.
   (2) Press the keys [SET UP] , [C] , [−] , and [SET] in the 21-key section to select test mode.
   (3) Press the keys [1] , [7] , [SET] , and [+] to select TTP ADJ, and press the key [SET] . Then , press the keys [C] , [0] , and [SET] .

[T-Reel FG-A Adjustment]

   (4) Press the keys [C] , [7] , and [SET] in this order. The control panel displays the following message.

```
XXXX
T-REEL      FG-A
```

   (5) When the blue key [IN] is pressed, the T-reel turns. Adjust the duty to 50±4% with the keys [+] and [−] as indicated by the waveform on the oscilloscope (connected to TP-31) shown in figure 7-9-15.
   (6) When this requirement is met, press the blue key [IN] and key [SET] to stop the T-reel.
   (7) Then, operate the following keys to write the adjustment value into the NOVRAM.
   [C] , [9] , [9] , [SET]
   The control panel displays the following message.

```
XXXX
DATA SAVE OK?
```

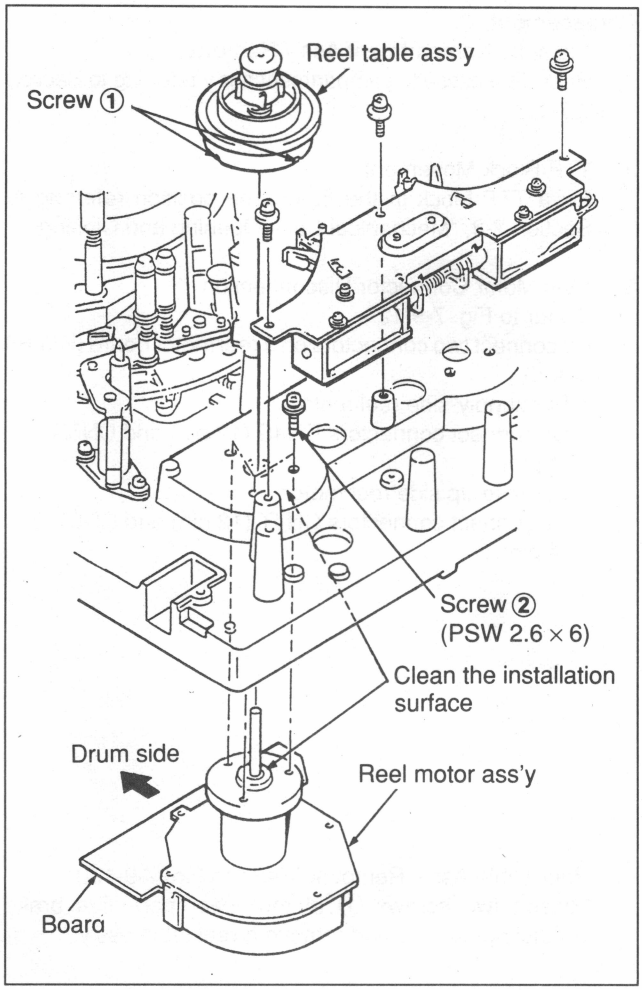

Fig. 7-9-14 Reel Motor Ass'y Replacement

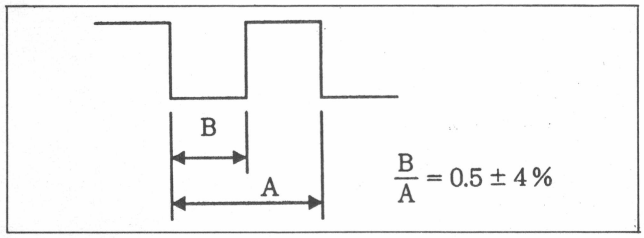

Fig. 7-9-15

With the key [F] pressed, press the white key [IN] and key [SET].
The control panel displays the following message.

```
XXXX
DATA SAVED
```

NOTE: To suspend data write, press the key [SET] when the message DATA SAVE OK? appears on the control panel, which then displays the following message.

```
XXXX
ABORTED
```

Data write is suspended.
Do not switch power off or operate keys during data write. Otherwise, adjustment data will be destroyed.

[T-Reel FG-B Adjustment]

(8) Press the keys [C], [8], and [SET] in this order.
The control panel displays the following message.

```
XXXX
T-REEL      FG-B
```

(9) When the blue key [IN] is pressed, the T-reel turns. Adjust the duty to 50±4% with the keys [+] and [−] as indicated by the waveform on the oscilloscope (connected to TP-31) shown in figure 7-9-15.

(10) When this requirement is met, press the blue key [IN] and key [SET] to stop the T-reel.

(11) Then, operate the following keys to write the adjustment value into the NOVRAM.
Refer to item (7) and repeat the same operation.

[S-Reel FG-A Adjustment]

(12) Press the keys [C], [9], and [SET] in this order.
The control panel displays the following message.

```
XXXX
S-REEL      FG-A
```

(13) When the blue key [IN] is pressed, the T-reel turns. Adjust the duty to 50±4% with the keys [+] and [−] as indicated by the waveform on the oscilloscope (connected to TP-31) shown in figure 7-9-15.

(14) When this requirement is met, press the blue key [IN] and key [SET] to stop the S-reel.

(15) Then, operate the following keys to write the adjustment value into the NOVRAM.
Refer to item (7) and repeat the same operation.

[S-Reel FG-B Adjustment]

(16) Press the keys [C], [1], [0], and [SET] in this order.
The control panel displays the following message.

```
XXXX
S-REEL      FG-B
```

(17) When the blue key [IN] is pressed, the S-reel turns. Adjust the duty to 50±4% with the keys [+] and [−] as indicated by the waveform on the oscilloscope shown in figure 7-9-15.

(18) When this requirement is met, press the blue key [IN] and key [SET] to stop the S-reel.

(19) Then. operate the following keys to write the adjustment value into the NOVRAM.
Refer to item (7) and repeat the same operation.

11. Reel Motor Torque Adjustment

After FG adjustment, adjust the reel motor torque using a tenterometer and control panel keys as described below.

(1) Set SW2 (DIP SW) "5" on the SV-116 circuit board to the OFF position, and press the keys [SET UP], [C], [−], and [SET] in the 21-key section of the control panel to select test mode.

NOTE: After making the above adjustment, be sure to return the DIP SW back to its original position.

(2) Press the keys [1], [7], [SET], and [+] to select TTP ADJ, and press the key [SET]. The control panel displays the following message.

```
T * R  XX:XX:XX:XX                    TEST MOD
TTP    ADJ                            ○○○○ ○○○○ ○○○○
```

[S-Reel Torque]

(3) Press the keys [C], [5], [5], and [SET] in this order. The control panel displays the following message.

```
XXXX
S REEL ADJ-1
```

(4) Insert a cassette, and play it at a point about 3 minutes before the tape end. Adjust the tension on the supply side to the specified level, using the keys [+] and [−] .
Specified tension: 35±5 g
(If a fine adjustment is necessary, use the keys [+] and [−] while the key [F] is kept depressed.)

(5) When the above requirement is met, press the key [SET] .

(6) Then, press the keys [C] , [5] , [6] , and [SET] n this order. The control panel displays the following message.

```
XXXX
S REEL ADJ-2
```

(7) Reverse the cassette at a point about 3 minutes before the tape end. Adjust the tension on the supply side to the specified level, using the keys [+] and [−] .
Specified tension: 35±5 g

(8) When the above requirement is met, press the key [SET] .

(9) Then, press the keys [C] , [5] , [7] , and [SET] in this order. The control panel displays the following message.

```
XXXX
S REEL ADJ-3
```

(10) Play the cassette at a point about 3 minutes before the tape end. Adjust the tension on the supply side to the specified level, using the keys [+] and [−] .
Specified tension: 35±5 g

(11) When the above requirement is met, press the key [SET] .

(12) Return to Steps (4) and (7), and check that the tension requirements are satisfied. If not, make a readjustment.

(13) Operate the following keys to write the adjustment value into the NOVRAM.
[C] , [9] , [9] , [SET]
The control panel displays the following message.

```
XXXX
DATA SAVE OK?
```

With the key [F] pressed, press the white key [IN] . When the key [SET] is pressed, the control panel displays the following message.

```
XXXX
DATA SAVED
```

NOTE: To suspend data write, press the key [SET] when the message DATA SAVE OK? appears on the control panel, which then displays the following message.

```
XXXX
ABORTED
```

Data write is suspended. Do not switch power off or operate keys during data write. Otherwise, adjustment data will be destroyed.

[T-Reel Torque]

(14) Press the keys [C] , [5] , [8] , and [SET] in this order. The control panel displays the following message.

```
XXXX
T REEL ADJ-1
```

(15) Insert a cassette, and play it at a point about 3 minutes before the tape end. Adjust the tension on the takeup side to the specified level, using the keys [+] and [−] .
Specified tension: 35±5 g
(If a fine adjustment is necessary, use the keys [+] and [−] while the key [F] is kept depressed.)

(16) When the above requirement is met, press the key [SET] .

(17) Then, press the keys [C] , [5] , [9] , and [SET] in this order. The control panel displays the following message.

```
XXXX
T REEL ADJ-2
```

(18) Reverse the cassette at a point about 3 minutes before the tape end. Adjust the tension on the takeup side to the specified level, using the keys [+] and [−] .
Specified tension: 35±5 g

(19) When the above requirement is met, press the key [SET] .

(20) Then, press the keys [C] , [6] , [0] , and [SET] this order. The control panel displays the following message.

XXXX T REEL ADJ-3

(21) Play the cassette at a point about 3 minutes before the tape end. Adjust the tension on the takeup side to the specified level, using the keys [+] and [−] .
Specified tension: 35±5 g

(22) When the above requirement is met, press the key [SET] .

(23) Return to Steps (15) and (18), and check that the tension requirements are satisfied. If not, make a readjustment.

(24) Operate the following keys to write the adjustment value into the NOVRAM.
[C] , [9] , [9] , [SET]
The control panel displays the following message.

XXXX DATA SAVE OK?

With the key [F] pressed, press the white key [IN] . When the key [SET] is pressed, the control panel displays the following messag.

XXXX DATA SAVED

(25) Return SW2 (DIP SW) "5" on the SV-116 circuit board to the ON position.

12. Tape Running Check
Check tape running, referring to 8-3-1.

13. Tracking Check
Check tracking, referring to 8-5-1.

7-10. TENSION REGULATOR BLOCK REPLACEMENT

Basic Knowledge

A. The replacement procedures of a tension regulator block are explained as the follwing sections.
- 7-10-1. Tension Regulator Guide Ass'y Replacement
- 7-10-2. Tension Regulator Sub-arm Ass'y Replacement
- 7-10-3. Tension Regulator Arm Ass'y Replacement
- 7-10-4. Tension Regulator Sensor Block Replacement

B. The replacement of the tension regulator block requires a guide ass'y slantness check and tension regulator position adjustment. Be careful not to damage the peripheral guide roller with the tool to be used.

C. Remove a cassette compartment ass'y when the tension regulator block components are replaced, because of performing the adjustment after replacement. Refer to Section 2-7-1, Removal of cassette Compartment.

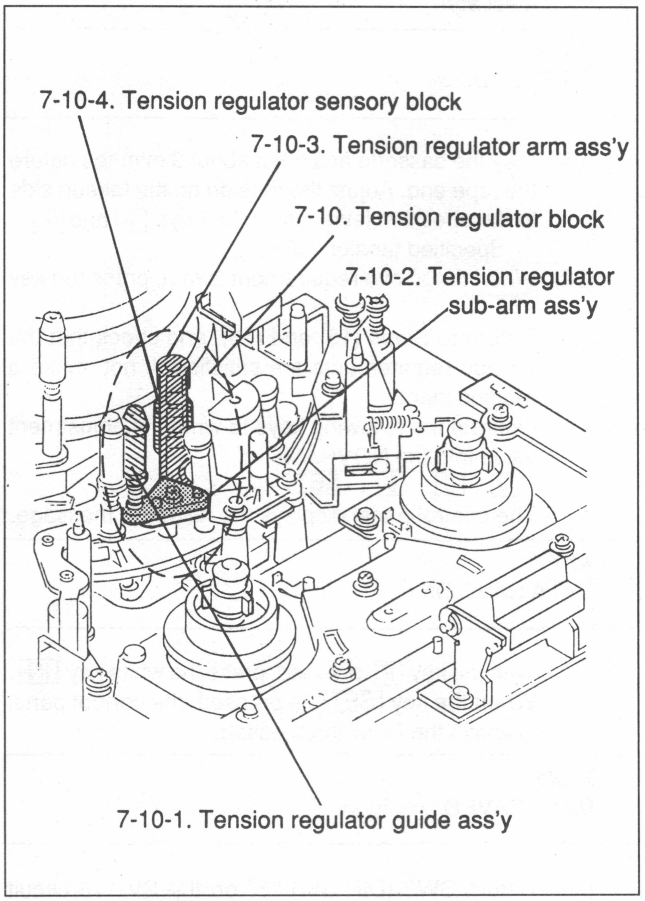

Fig.7-10-1 Tension Regulator Block

D. Check of Tape Transport are after replacement of the each Tape Guide Ass'y and Ring Guide Ass'y. Refer to Section 8-3-1. Check of tape Transport and Figure 7-10-2. Adjustment of Tape Transport.

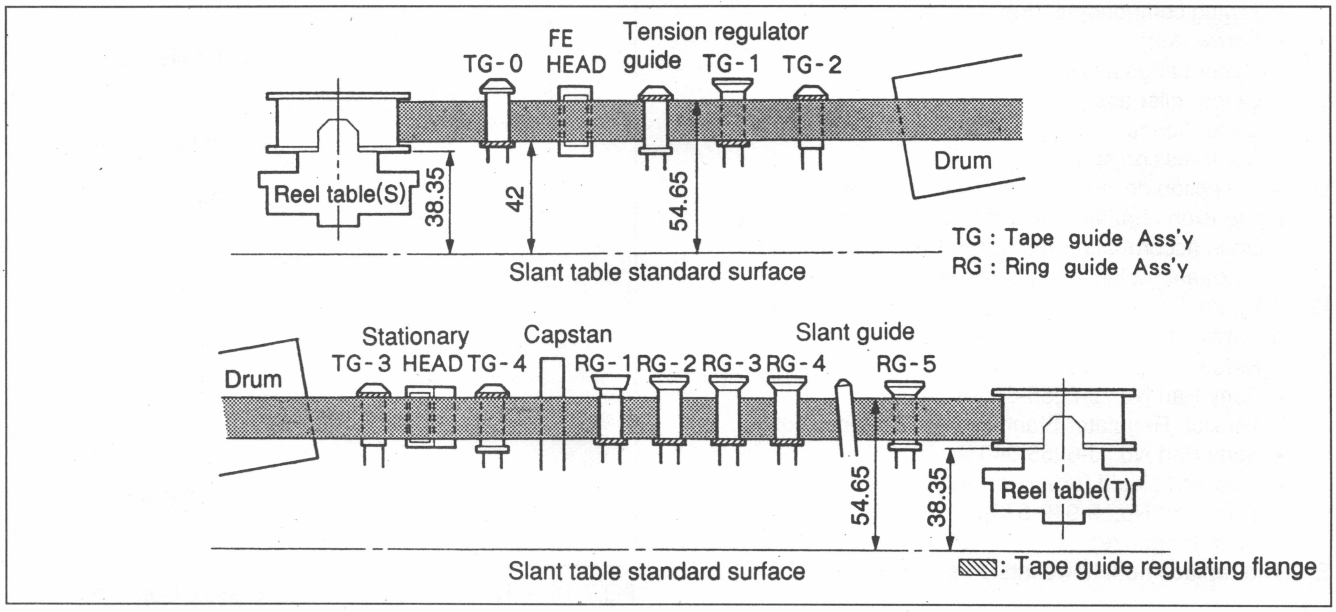

Fig.7-10-2 The each Tape Guide Ass'y and Ring Guide Ass'y Replacement

E. After completing replacement and adjustment on each part (Sections 7-10-1, 2, 3), be sure to apply lock paint to the heads of 3 screws shown in Fig. 7-10-23.

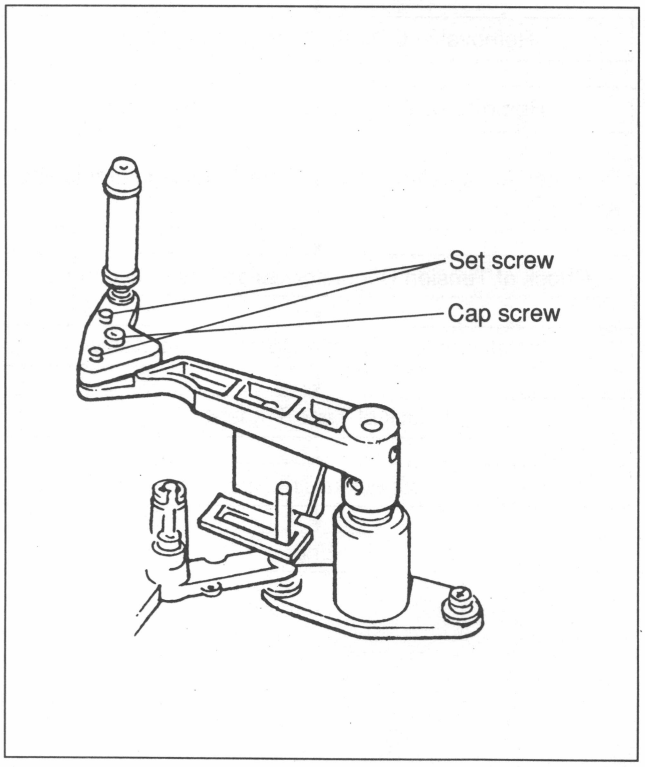

Fig.7-10-23 Apply Lock Paint

7-10-1. Tension Regulator Guide Ass'y Replacement

Basic Knowledge

A. Refer to the (basic knowledge) of Section. 7-10 before replacement.

B. The tension regulator guide ass'y is composed of the following components. (Fig. 7-10-2)
- Screw (M3)
- Upper flange ass'y
- Guide roller ass'y
- Lower flange
  Compression spring

C. This section describes the replacement procedure of the tension regulator guide ass'y. Therefore, replace them in accordance with this procedure when each component replacement is required.

D. Prepare the following tools for replacements and adjustments:
- Reference plate tool
- Sony Part No.: J-6255-830-A
- Tension Regulator Slantness Adjustment Tool
- Sony Part No.: J-6256-340-A
- Cleaning Liquid (or an equivalent)
- Sony Part No.: 9-919-573-01
- Cloth (or gauze)

E. The replacement flowchart is as follows:

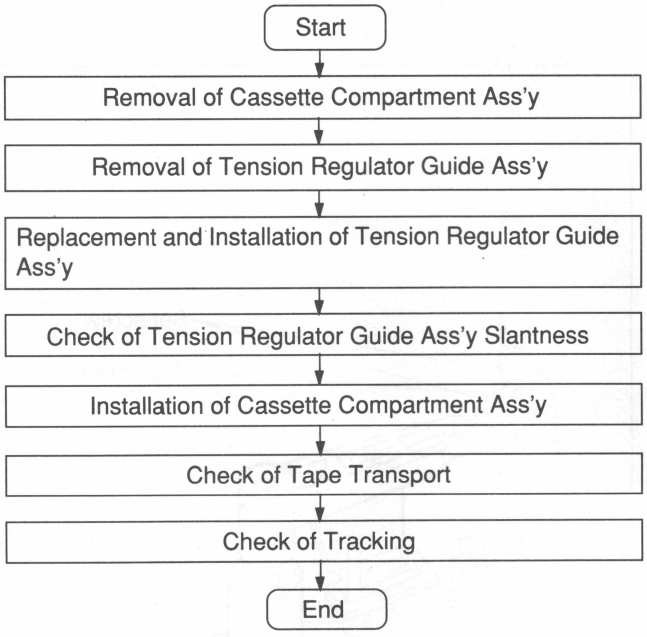

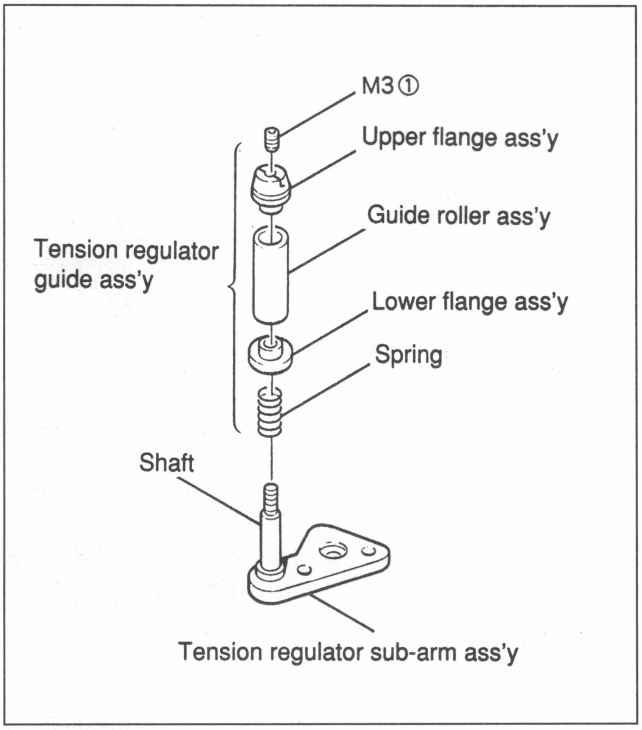

Fig.7-10-3 Tension Regulator Guide Ass'y Replacement

Replacement

1. Cassette Compartment Ass'y Removal
   Remove the cassette compartment ass'y referring to Section 2-7-1.
2. Removal of Tension Regulator Guide Ass'y
   (1) Loosen screw ① and remove an upper flange.
   (2) Remove a guide roller ass'y, lower flange, and compression spring from the shaft of a tension regulator sub-arm ass'y.
3. Replacement and Installation of Tension Regulator Guide Ass'y
   (1) Replace the tension regulator guide ass'y in the reverse order of step 2, then install.
   (2) Screw the screw ① into the upper flange so that the top surface of screw ① aligns with the lower edge of slant surface inside the upper flange then install. (Fig. 7-10-4)
   (3) Install the upper flange ass'y assembled in step (2) to the shaft as far as it will go.

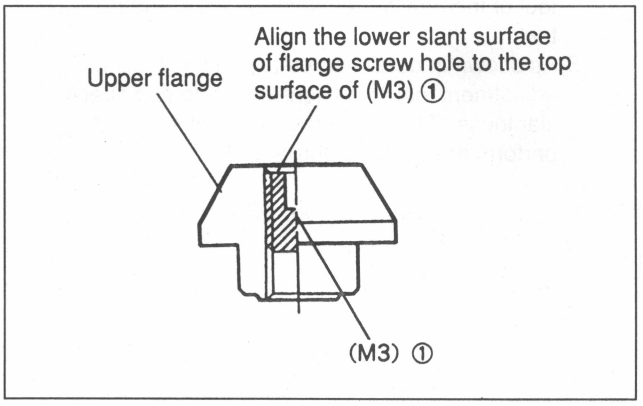

Fig.7-10-4 Upper Flange Ass'y

Note: As shown in Fig. 7-10-5, the guide roller ass'y has a directional characteristic. The ball bearing set to the inner portion is placed upward.

(4) Clean the guide roller ass'y with cloth moistened with cleaning liquid.
After cleaning, wipe it with dry cloth two or three times.

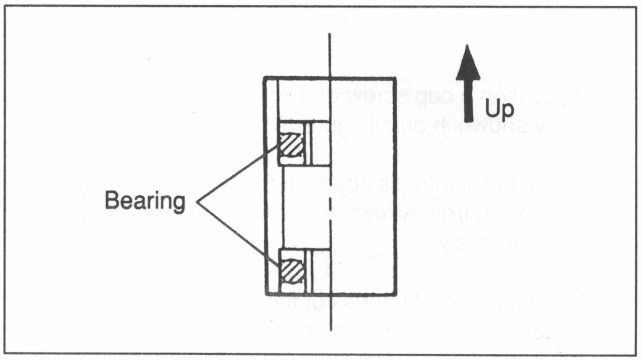

Fig.7-10-5 Guide Roller Ass'y Directional

4. Tension Regulator Guide Ass'y Slantness Check
   (1) Rotate a manual crank an a loading drive gear ass'y clockwise and put the loading ring ass'y into the threading end state.
   (2) Clean the installation surface of a standard plate tool (DM-583) and base plate and the measurement surface of a Tension regulator slantness adjustment tool with cloth moistened with cleaning fluid.
   (3) Install the reference plate tool as shown in Fig. 7-10-5.
   (4) Put the Tension regulator slantness adjustment tool of the tension regulator on the standard plate tool.
   (5) As shown in detail figures (B) and (C), put the adjustment tool to the tension guide and check slantness. If the specification is not satisfied, perform the steps (6) through (8).

   Specification: ±30μm

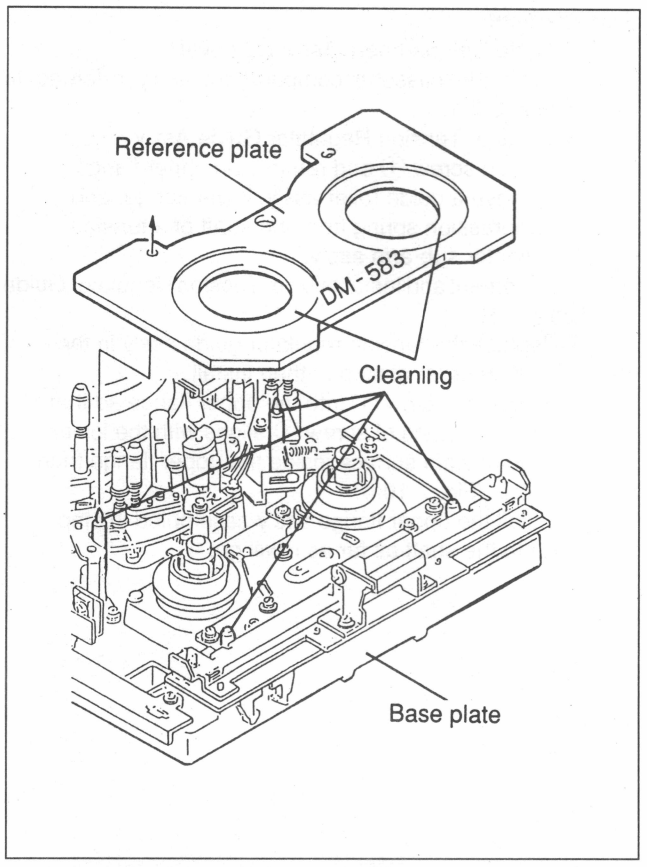

Fig.7-10-6 Standard Plate Tool Installation

   (6) Loosen a cap screw of the tension regulator arm ass'y shown in detail figure (A).

   (7) Put the slantness adjustment tool to the two directions (viewed from arrows A and B) of the tension regulator guide ass'y.

   (8) Adjust both slantness of the two directions satisfy the specification with two setscrews.

   (9) If the specification is satisfied, tighten the cap screw.
5. Installation of Cassette Compartment Ass'y
   Refer to Section 2-7-1.
6. Perform the Check of Tape Transport. Check of Tension Regulator Guide Ass'y; Check the height so that the upper edge of the tape stably runs in contact with the upper flange without curl. If the above stated is not satisfied, perform the 8-3-2. Tape Transport Adjustment.
   Refer to Section 8-3-1.
7. Perform the Check of Tracking
   Refer to Section 8-5-1.

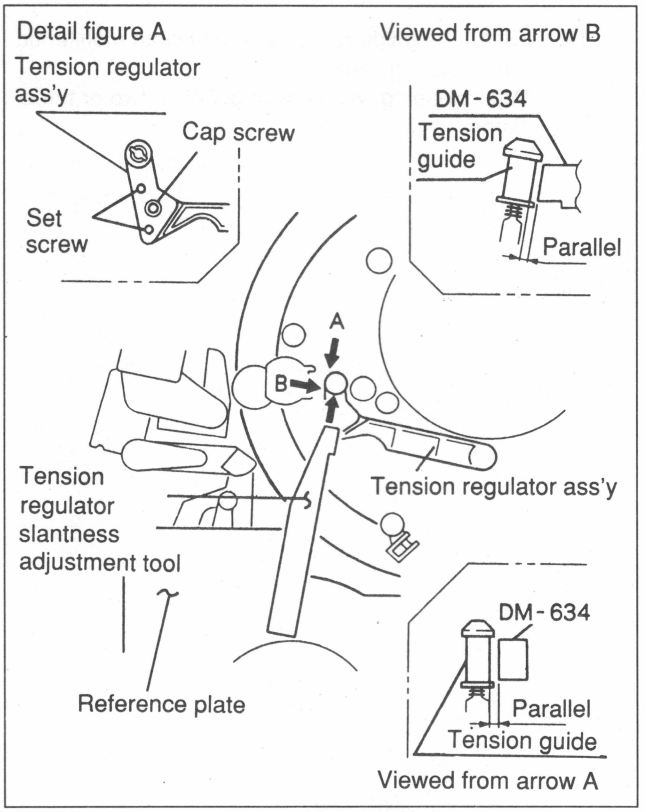

Fig.7-10-7 Tension Regulator Guide Ass'y Slantness Adjustment Tool

7-10-2. Replacement of Tension Regulator Sub-arm Ass'y

Basic Knowledge

A. Refer to the basic knowledge of Section 7-10 before replacement.
B. Replace the tension regulator sub-arm ass'y together with a tension regulator guide ass'y.
C. Prepare the following tools for replacements and adjustments:
   - Standard plate tool
     Sony Part No.: J-6255-830-A
   - Tension Regulator Slantness Adjustment tool
     Sony Part No.: J-6256-340-A
   - Cleaning Liquid (or an equivalent)
     Sony Part No.: 9-919-573-01
   - Cloth (or gauze)

D. The replacement flowchart is as follows:

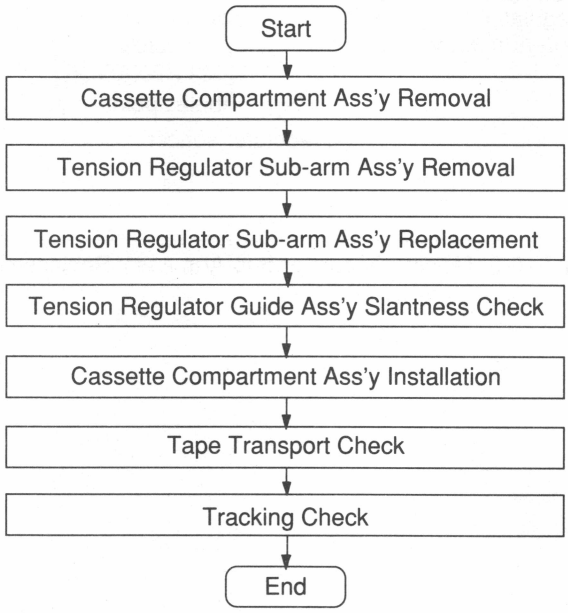

Replacement

1. Cassette Compartment Ass'y Removal
   Remove the cassette compartment ass'y referring to Section 2-7-1.

2. Tension Regulator Sub-arm Ass'y Removal
   (Fig. 7-10-8)
   (1) Remove screw ①, then remove a tension regulator sub-arm ass'y.
   (2) Remove screws ② and ③.

Note: A tension regulator spacer is also removed when the tension regulator sub-arm ass'y is removed. Take care not to lose the tension regulator spacer.

3. Replacement of Tension Regulator Sub-arm Ass'y
   (1) Put the spacer on a tension regulator arm and fix the tension regulator sub-arm ass'y with screw ① snugly (with washer and spring washer), but do not tighten.
   (2) Install screws ② and ③.

Note 1: Screws ② and ③ differ in shape as shown in the figure.
Note 2: Screw ① is tightened during slantness adjustment.

   (3) Clean the guide roller ass'y with cloth moistened with cleaning Liquid. After cleaning, wipe it with dry cloth two or three times.

4. Tension Regulator Guide Ass'y Slantness Adjustment
   Adjust the tension regulator ass'y slantness referring to step 4 of Section 7-10-1.

5. Cassette Compartment Ass'y Installation
   Refer to Section 2-7-1.

6. Perform the Check of Tape Transport.
   Check of Tension Regulator Guide Ass'y; Check the height so that the upper edge of the tape stably runs in contact with the upper flange without curl. If the above stated is not satisfied, perform the 8-3-2. Tape Transport Adjustment.
   Refer to Section 8-3-2.

7. Perform the Check of Tracking
   Refer to Section 8-5-1.

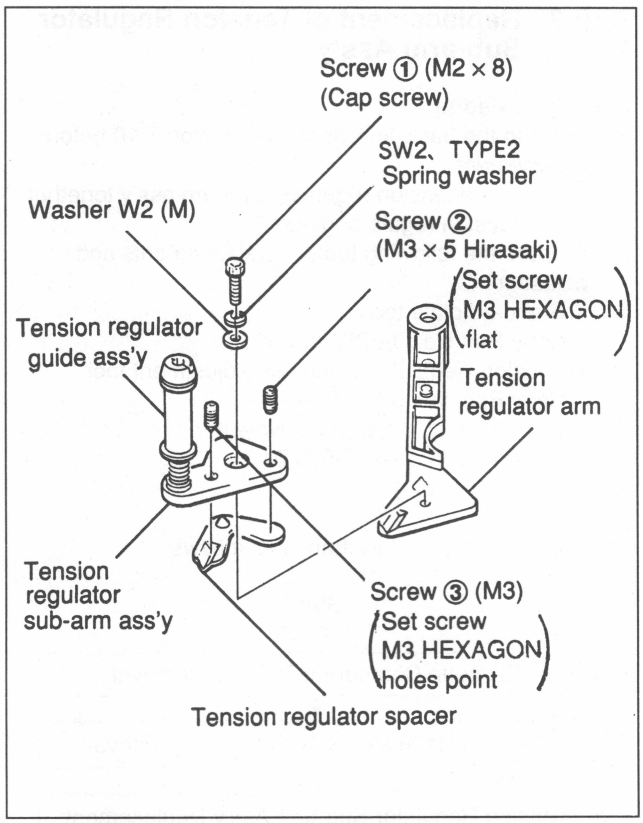

Fig.7-10-8 Tension Regulator Sub-Arm Ass'y Replacement

7-10-3. Tension Regulator Arm Ass'y Replacement

Basic Knowledge

A. Refer to the basic knowledge of Section 7-10 before replacement.

B. The tension regulator arm ass'y is composed of the following components. This section describes the replacement procedure of the entire ass'y. Therefore, replace them in accordance with this procedure when each component replacement is required.
- Tension regulator arm
- Leaf spring
- Protector

C. After replacement is completed, perform the adjustments and check below.
- Adjustment of tension regulator position
- Adjustment of tension sensor GAIN/OFFSET
- Check of tension regulator guide slantness
  Refer to step 4 of Section 7-10-1.
- Adjustment of tape Transport

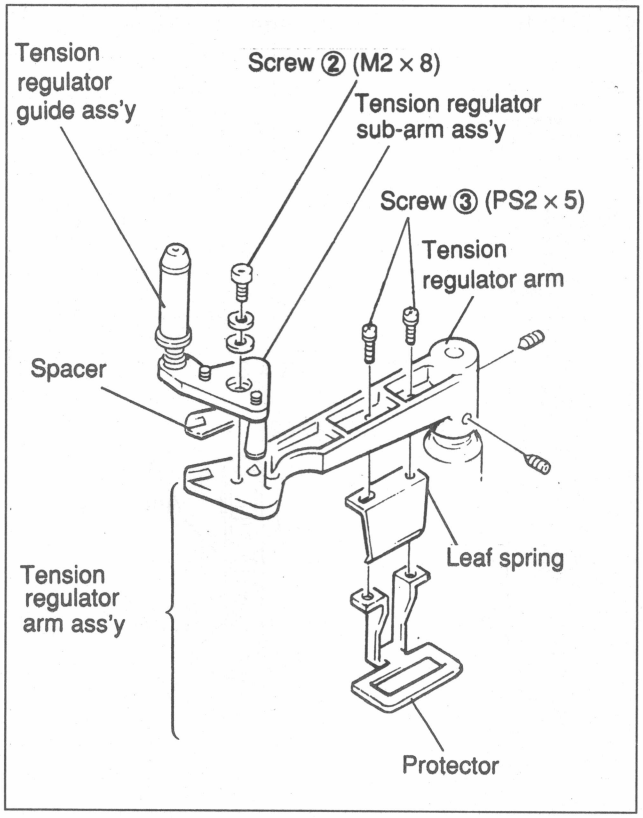

Fig.7-10-9 Tension Regulator Arm Ass'y

D. Prepare the following tools for replacements and adjustments:
- Standard plate tool
  Sony Part No.: J-6255-830-A
- Tension Regulator Slantness Adjustment Tool
  Sony Part No.: J-6256-340-A
- Tension Adjustment Tool
  Sony Part No.: J-6255-910-A
- Cleaning Liquid (or an equivalent)
  Sony Part No.: 9-919-573-00
- Sony Grease
  Sony Part No.: 7-662-010-04
- Cloth (or gauze)

E. The replacement flowchart is as follows:

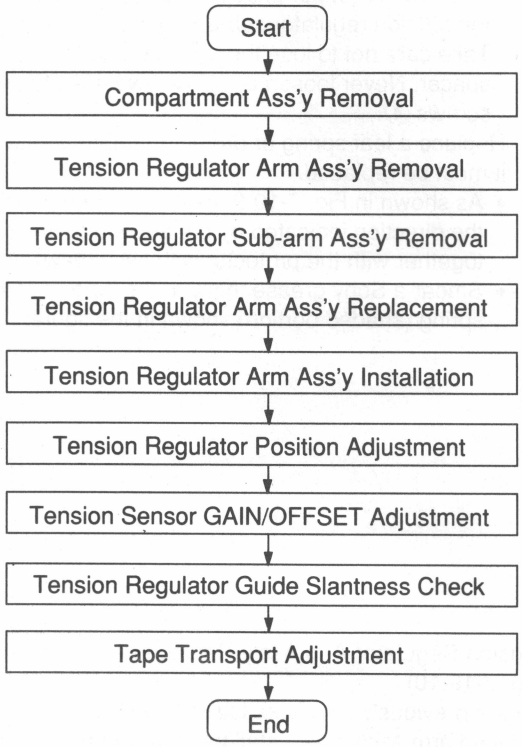

F. Here afer the part name "tension regulator" is abbreviated in part of sentence.

Replacement

1. RemovalCassette Compartment Ass'y Removal
   Remove the cassette compartment ass'y referring to Section 2-7-1.

2. Tension Regulator Arm Ass'y Removal (Fig. 7-10-10)
   (1) Put a finger on the upper flange of the guide ass'y and move the arm ass'y slightly to the inside.
   (2) Loosen two screws ① shown in the figure and remove the arm ass'y from the shaft.

3. Tension Regulator Sub-arm Ass'y Removal
   (1) Remove screw ② and remove a tension regulator sub-arm ass'y from the tension regulator arm ass'y.
   Note: A tension regulator spacer is also removed when the tension regulator sub-arm ass'y is removed. Take care not to lose the tension regulator spacer. Never loosen or tighten two adjustment screws ④.
   (2) Replace a leaf spring or protector at that time when it must be replaced.
   - As shown in Fig. 7-10-9, move the leaf spring in the direction indicated by the arrow and install it together with the protector with two screws ③.
   - Smear a Sony grease thinly to the portion of leaf spring (shaded portion) shown in the figure.

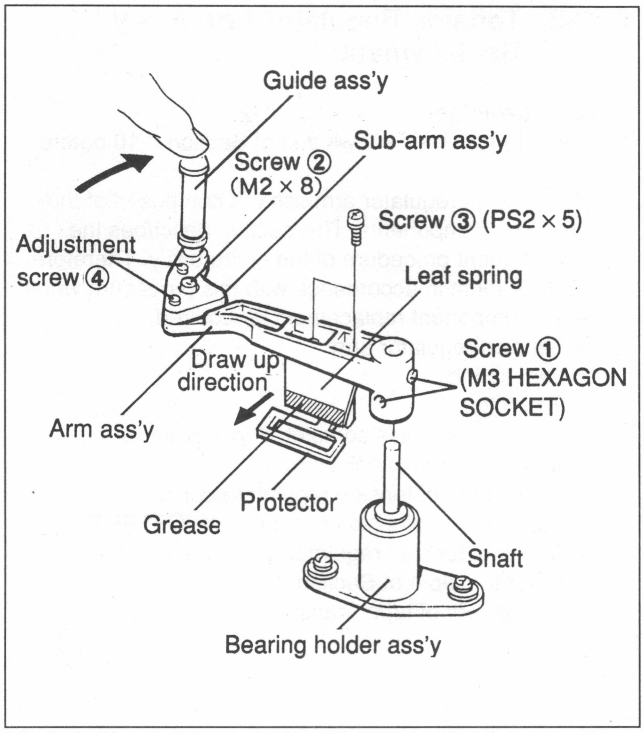

Fig.7-10-10 Tension Regulator Arm Ass'y Removal

4. Tension Regulator Arm Ass'y Replacement (Fig. 7-10-10)
   Put the previously removed spacer in a newly replaced arm ass'y and install the sub-arm ass'y with screw ② (with washer and spring washer).

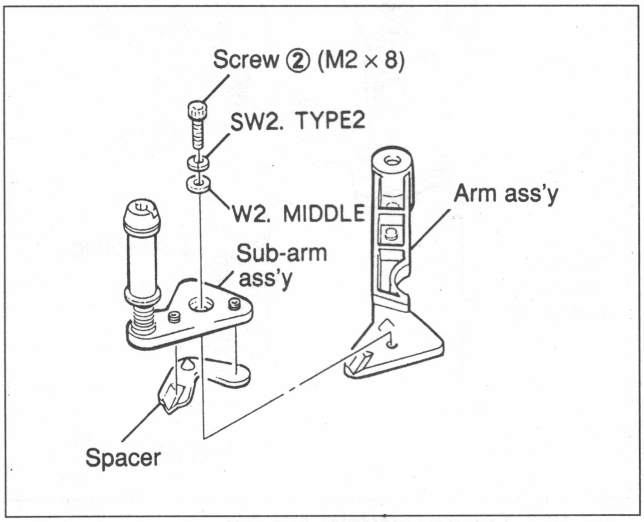

Fig.7-10-11 Tension Regulator Sub-Arm Ass'y Installation

5. Tension Regulator Arm Ass'y Installation (Fig. 7-10-12)
   (1) Insert the arm ass'y into the shaft of a bearing holder ass'y while inserting the shaft of a return arm ass'y into the square hole of the protector shown in the figure.
   (2) Fix two screws ① of the arm ass'y to the shaft snugly, but do not tighten.

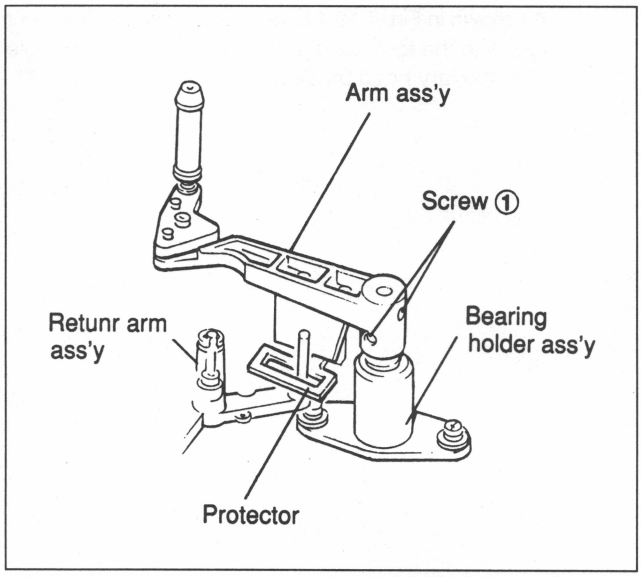

Fig.7-10-12 Tension Regulator Arm Ass'y Installation

6. Tension Regulator Position Perform the Adjustment
   (1) Raise the TTP block.
   Fix the TTP block in 60 degree-position referring to Section 2-8.
   (2) Solder a lead wire to pin 7 of IC-N4 on RM-68 board. Connect another end of the lead wire to a CH-1 probe of an oscilloscope.
   (3) Place the TTP block to the former horizontal position.
   (4) Rotate a manual crank on a loading drive gear ass'y clockwise and put the loading ring ass'y into the threading end state.

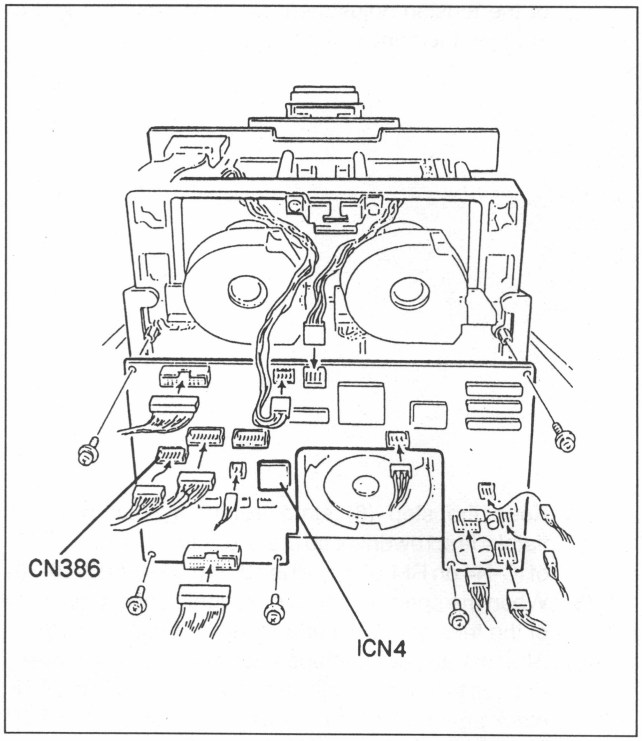

Fig.7-10-13 RM-68 Board

(5) As shown in Fig. 7-10-14, install the tension adjustment tool with the tool fixing screw into the mounting hole of stationary head bracket.

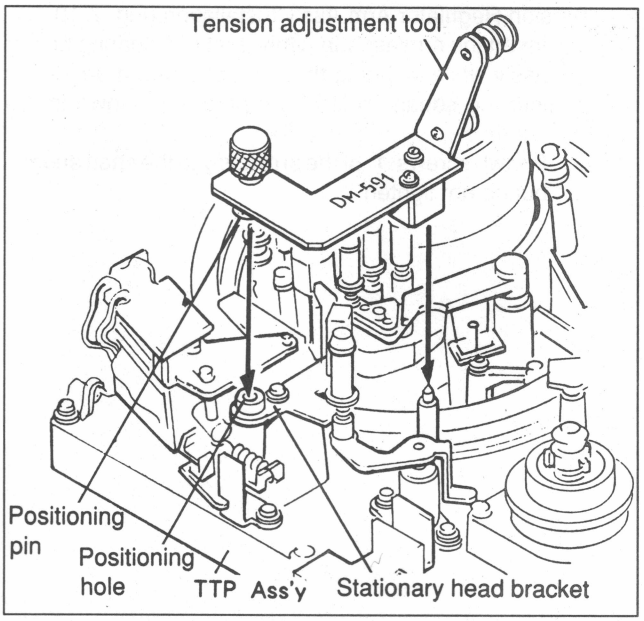

Fig.7-10-14 Tension Adjustment Tool ⑳① Installation

(6) As shown in Fig. 7-10-15, put a string on the pulleys of the tension adjustment tool and hook the end of string in the center of the guide ass'y.

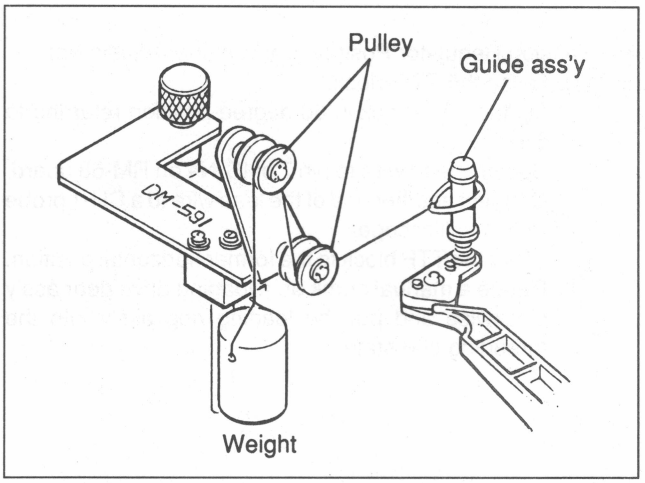

Fig.7-10-15 Tension Adjustment Tool ⑳② Installation

(7) Keep the step (6) state, rotate a shaft with the flatblade screwdriver so that the voltage at pin 7 (TP3) of IC-N4 on RM-68 board is –2.5±0.5 V (Fig. 7-10-16)
(8) When the specification is met, tighten two screws ① of the tension regulator arm ass'y. (Fig. 7-10-16)
(9) After the above mentioned adjustment is complated, remove the tension adjustment tool and raise the TTP block again. Unsolder the lead wire, place the TTP block to the former position, then fix it.
(10) Put the loading ring ass'y to the unthreading end state.

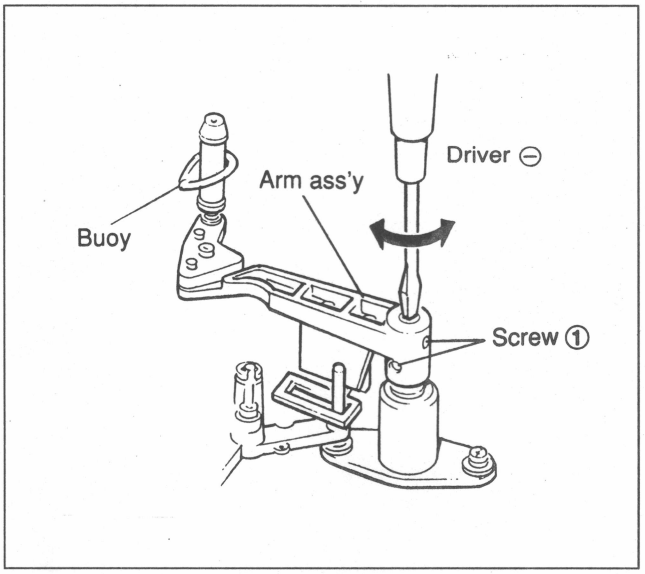

Fig.7-10-16 Tension Regulator Position Perform the Adjustment

7. Tension Sensor GAIN/OFFSET Adjustment
   (1) Put the loading ring ass'y into the threading end state.
   (2) Connect Ch-1 of an oscilloscope to TP31 on SV-116 board.
   (3) Operate the number keys on the control panel as described below so that, when the arm assembly is moved closest to the drum assembly by finger as shown in figure 7-10-17, Ch-1 will have a value of 0±0.2 V.
   - Press the keys [SET UP] , [C] , [−] , and [SET] in the 21-key section of the control panel to select test mode.
   - Press the keys [1] , [7] , [SET] , [+] , and [+] to select TTP ADJ, and press the key [SET] . The control panel displays the following message.

```
T * R  XX:XX:XX:XX                    TEST MOD
TTP ADJ                          ○○○○ ○○○○ ○○○○
```

   - Press the keys [C] , [6] , [1] , and [SET] in this order. The control panel displays the following message.

```
XXXX
TENSION ADJ-1
```

   - Adjust to meet the specified value, using the keys [−] and [+] . (If a fine adjustment is necessary, use the keys [+] and [−] while the key [F] is kept depressed.)
   - Operate the following keys to write the adjustment value into the NOVRAM.
     [C] , [9] , [9] , [SET]
     The control panel displays the following message.

```
XXXX
DATA SAVE OK?
```

   With the key [F] pressed, press the white key [IN] . When the key [SET] is pressed, the control panel displays the following message.

```
XXXX
DATA SAVED
```

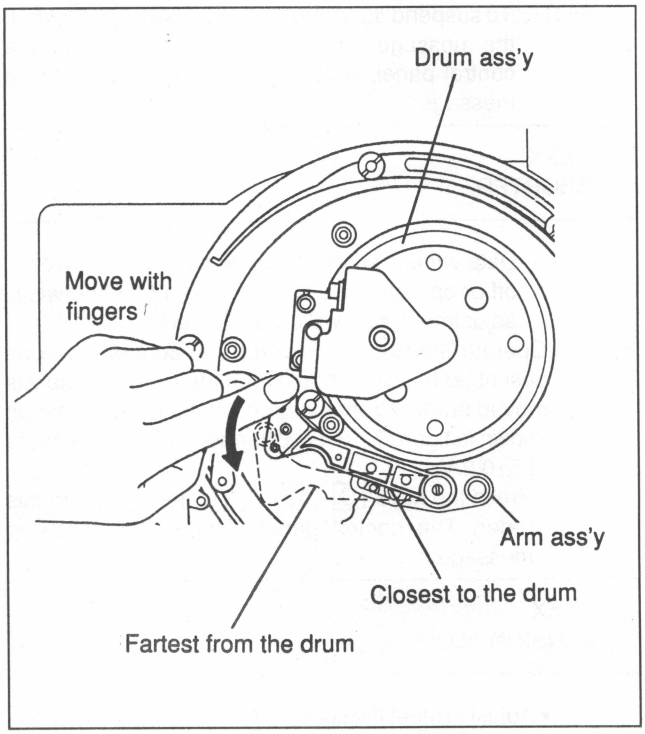

Fig.7-10-17 Tension Senser GAIN/OFFSET Adjustment

NOTE: To suspend data write, press the key [SET] when the message DATA SAVE OK? appears on the control panel, which then displays the following message.

```
XXXX
ABORTED
```

Data write is suspended. Do not switch power off or operate keys during data write. Otherwise, adjustment data will be destroyed.

(4) Operate the number keys on the control panel as described below so that, when the arm assembly is moved farthest from the drum assembly by finger as shown in figure 7-10-17, Channel 1 will have a value of 5±0.2 V.

- Press the keys [C] , [6] , [3] , and [SET] in this order. The control panel displays the following message.

```
XXXX
TENSION ADJ-3
```

- Adjust to meet the specified value, using the keys [−] and [+] . (If a fine adjustment is necessary, use the keys [+] and [−] while the key [F] is kept depressed.)
- Operate the following keys to write the adjustment value into the NOVRAM.
  [C] , [9] , [9] , [SET]

The control panel displays the following message.

```
XXXX
DATA SAVE OK?
```

With the key [F] pressed, press the white key [IN] . When the key [SET] is pressed, the control panel displays the following message.

```
XXXX
DATA SAVED
```

(5) Wipe the guide assembly a two or three times to clean it with a cloth soaked with a cleaning fluid. After cleaning, wipe the surface with dry-cloth.

(6) Install the cassette compartment assembly by reversing Item 1.

(7) Set SW2 (DIP SW) "5" on the SV-116 to the OFF position, insert a cassette, and select REC mode. Operate the number keys on the control panel described below.
Press the keys [SET UP] , [C] , [−] , and [SET] to select test mode, and press the keys [1] , [7] , [SET] , [+] , and [+] to select TTP ADJ mode.
[SET] , then [C] , [6] , [1] , and [SET] . (Check the Channel 1 voltage.)
Press the keys [C] , [6] , [2] , and [SET] . Check that each time the keys [C] , [6] , [1] , and [SET] and the keys [C] , [6] , [2] , and [SET] are pressed, the Channel 1 value changes, and operate the number keys as follows till the difference is 2.2±0.1 V.
After pressing the keys [C] , [6] , [1] , and [SET] (TENSION ADJ-1), use the keys [+] and [−] to adjust the above.
When the requirement is met, press the key [SET] .
Then, operate the number keys on the control panel as follows to adjust the higher voltage to 3±0.1 V.
Press the keys [C] , [6] , [3] , and [SET] , and adjust it with the keys [+] and [−] . When the requirement is met, press the key [SET] .

(8) Operate the number keys on the control panel as follows ([C] , [6] , [2] , [SET]), and check that the Channel 1 voltage is 0.8±0.1 V.
If the requirement is not met, set SW2 (DIP SW) "5" on the SV-116 to the ON position.

8. Cassette Compartment Ass'y Removal
Remove the cassette compartment ass'y referring to Section 2-7-1.

9. Tension Regulator Guide Slanthness Perform the Check
Refer to step4 of Section 7-10-1.

10. Cassette Compartment Ass'y Installation
Install the Cassette Compartment Ass'y in the reverse order of step 1.

11. Tape Transport Perform the Adjustment
Refer to Section 8-3-2.

7-10-4. Tension Regulator Sensor Block Replacement

Basic knowledge

A. Refer to the basic knowledge of Section. 7-10 before replacement

B. The tension regulator sensor block is composed of the following components. (Fig. 7-10-17).
Replace the entire block when replacing each component.
- Tension regulator shaft
- Bearing holder ass'y
- Bearing support
- Audio adjustment spring
- Magnet holder ass'y
- TR-58 board (with DME holder)

C. Prepare the following tools for replacements and adjustments:
- Reference plate tool
  Sony Part No.: J-6255-830-A
- Tension regulator slantness adjustment tool
  Sony Part No.: J-6256-340-A
- Tension adjustment tool
  Sony Part No.: J-6255-910-A
- Cleaning Liquid (or an equivalent)
  Sony Part No.: 9-919-573-00
- Cloth (or gauze)

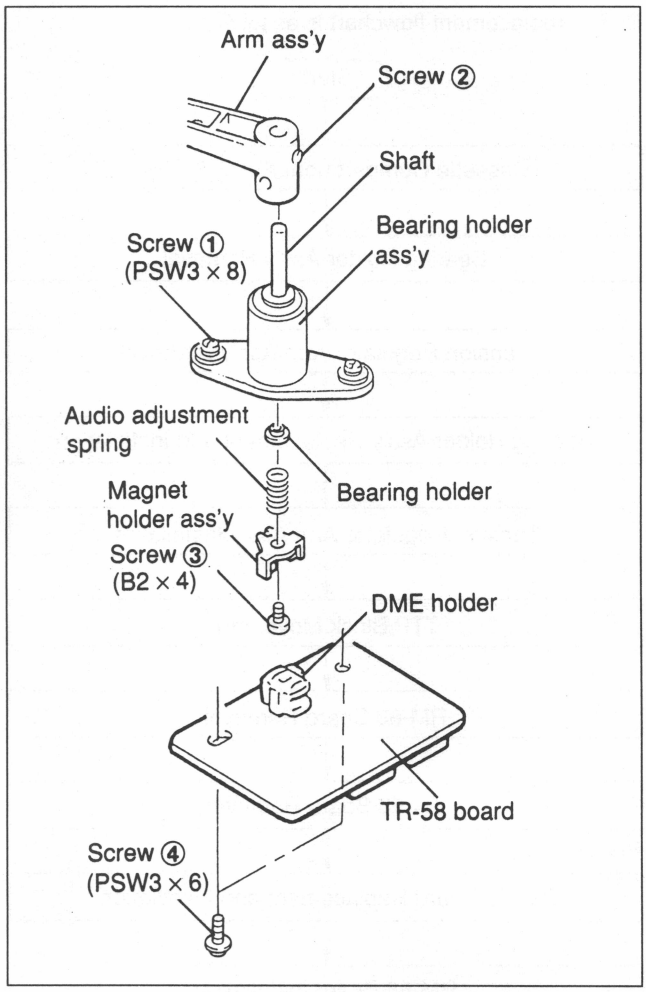

Fig.7-10-18 Tension Regulator Senser Block

D. The replacement flowchart is as follows:

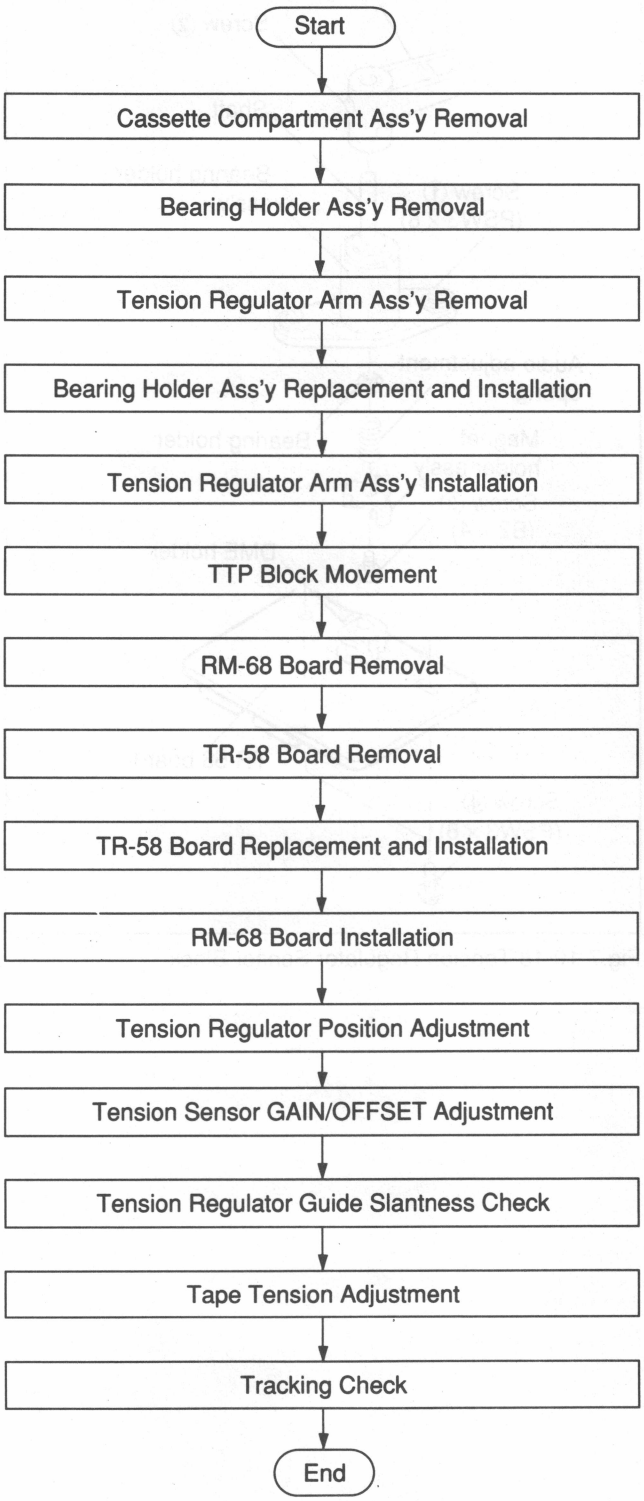

Replacement

1. Cassette Compartment Ass'y Removal
   Remove the cassette compartment ass'y referring to Section. 2-7-1.

2. Bearing Holder Ass'y Removal (Fig. 7-10-19)
   Remove two screws ① shown in the figure, then remove a bearing holder ass'y together with a tension regulator arm ass'y.

3. Tension Regulator Arm Ass'y Removal (Fig. 7-10-19)
   Loosen two screws ② and remove the tension regulator arm ass'y from the bearing holder ass'y.

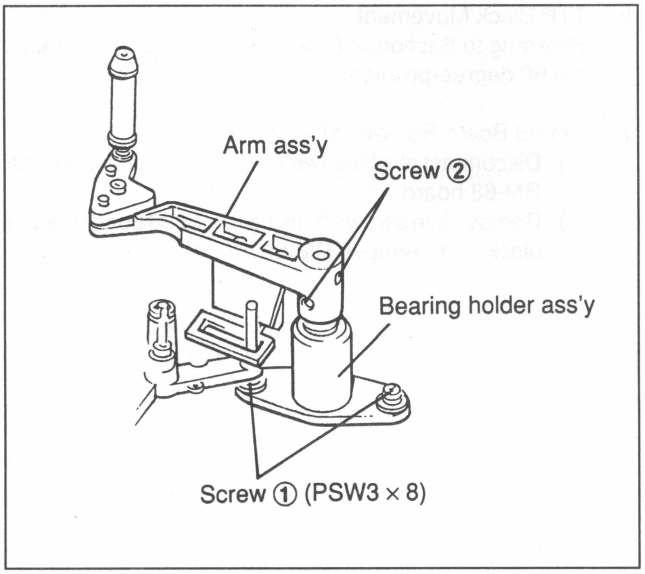

Fig.7-10-19 Bearing Holder Ass'y with a Tension Regulator Arm Ass'y Removal

4. Bearing Holder Ass'y Replacement and Installation (Fig. 7-10-20)
   Install a newly replaced bearing holder ass'y in the TTP block with two screws ①.

5. Tension Regulator Arm Ass'y Installation (Fig. 7-10-20)
   Insert the tension regulator arm ass'y removed in step (3) into the shaft of the bearing holder ass'y. At that time, be sure to put the shaft of a return arm ass'y in the square hole of a protector. Then, fix two screws ② snugly, but do not tighten .

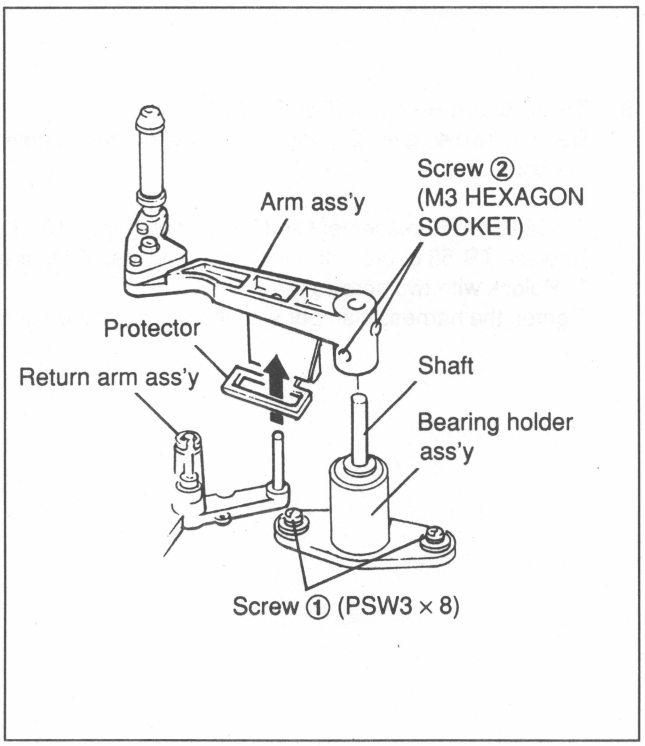

Fig.7-10-20 Bearing Holder Ass'y Replacement and Installation

6. TTP Block Movement
   Referring to Section. 2-8, raise the TTP block and fix it in the 60 degree-position.

7. RM-68 Board Removal (Fig. 7-10-21)
   (1) Disconnect all of the twelve connectors connected to RM-68 board.
   (2) Remove five screws ① fixing to RM-68 board the TTP block, then remove RM-68 board.

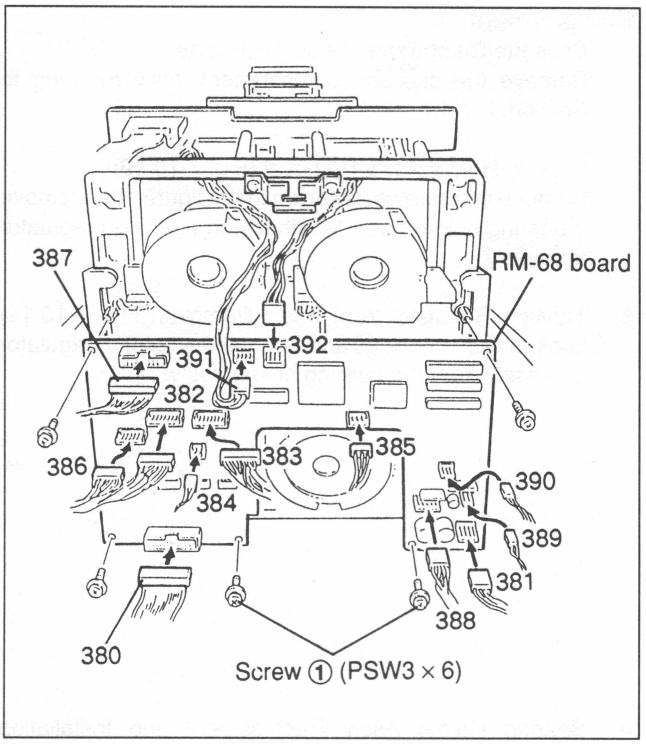

Fig.7-10-21 RM-68 Board Removal

8. TR-58 Board Removal (Fig. 7-10-22)
   Remove two screws ② fixing TR-58 board, then remove the board.

9. TR-58 Board Replacement and Installation (Fig. 7-10-22)
   Replace TR-58 board with a new one and install it in the TTPblock with two screws ②.
   Tighten the harness clamper with the screw on the right.

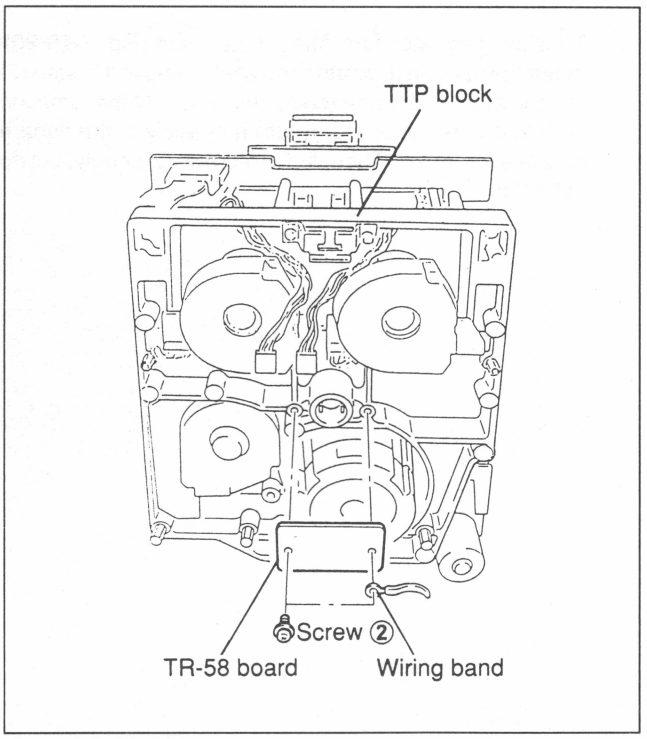

Fig.7-10-22 TR-58 Board Removal

10. RM-68 Board Installation
    Install RM-68 board in the reverse order of step (7). (Refer to Fig. 7-10-21.)

11. Tension Regulator Position Perform the Adjustment
    Adjust the tension regulator position referring to step (6) of Section. 7-10-3.

12. Tension Sensor GAIN/OFFSET Perform the Adjusment
    Adjust the tension sensor referring to step (7) of Section. 7-10-3.

13. Cassette Compartment Ass'y Removal
    Remove the cassette compartment ass'y referring to Section. 2-7-1.

14. Tension Regulator Guide Slantness Perform the Check
    Check the tension regulator guide slantness referring to step (4) of Section. 7-10-1.

15. Cassette Compartment Ass'y Installation
    Install the cassette compartment ass'y referring to Section. 2-7-1.

16. Tape Tension Perform the Adjustment
    Adjust the tape tension referring to Section. 8-2-2.

17. Tracking Perform the Check
    Check the tracking referring to Section. 8-5-1.

7-11. S DRAWER ARM BLOCK REPLACEMENT

Basic Knowledge

A. The replacement procedures of a S drawer arm block are explained as the following sections. (Fig. 7-11-1)
- 7-11-1. Tape Guide 0 Ass'y Replacement
- 7-11-2. Tape Guide 0 Arm Ass'y Replacement
- 7-11-3. Tape Guide 0 Bearing Holder Ass'y Replacement

B. The following procedure is required for each ass'y replacement.
- Removal of Cassette Compartment Ass'y a Refer to Section. 2-7-1, Removal of Cassette Compartment Ass'y.

C. After the S drawer arm block replacement is completed, check the tape transport and confirm that no tape curl exists in the upper and lower flanges.

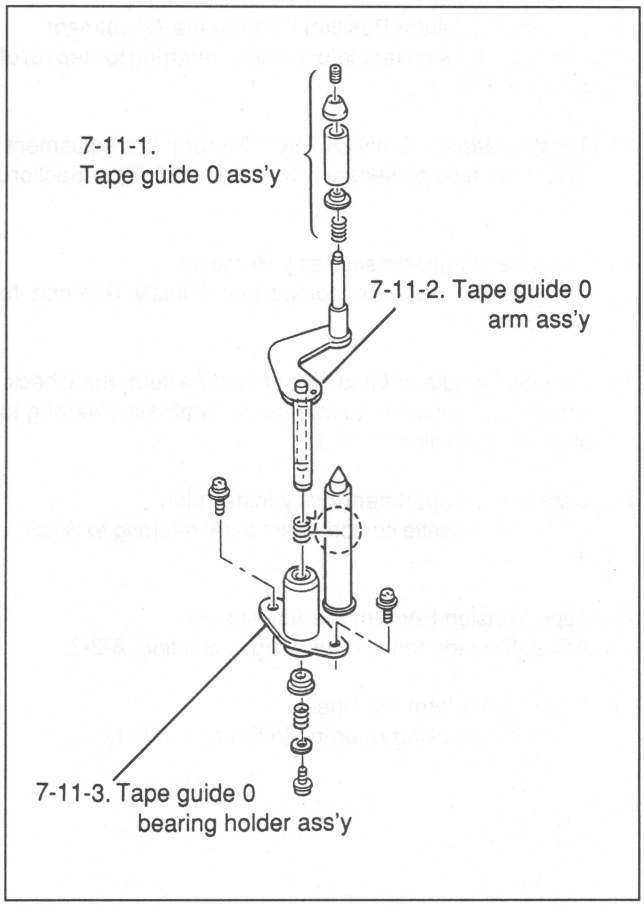

Fig.7-11-1 S Drawer Arm Block

It is recommended to use a guide flange adjustment driver for flange height adjustment. (Fig. 7-11-2)

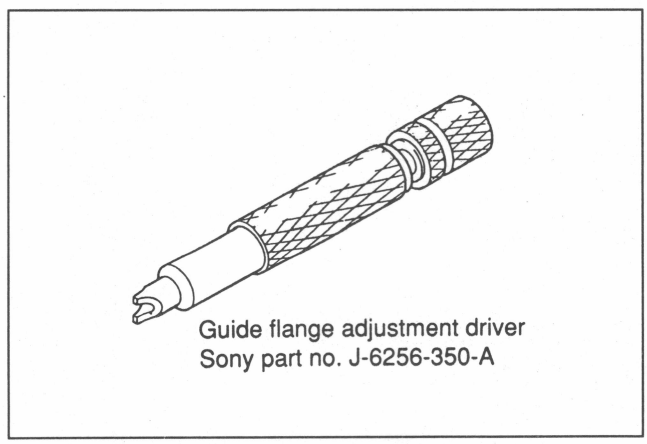

Fig.7-11-2 Guide Flange Adjustment Driver

7-11-1. Tape Guide 0 Ass'y Replacement

Basic Knowledge

A. Refer to the basic Knowledge of Section 7-11 before replacements.

B. Prepare the following tools for replacements and adjustments:
- Cleaning fluid (or a equivalent) Sony Part No.: 9-919-573-00
- Cloth (or gauze)

C. The replacement flowchart is as follows:

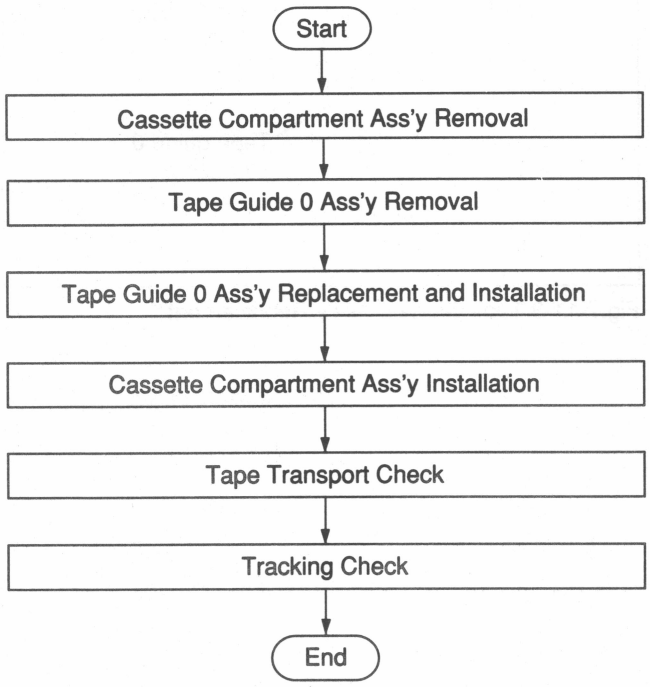

Replacement

1. Removal of Cassette Compartment Ass'y Remove the cassette compartment ass'y referring to Section 2-7-1.

2. Tape Guide 0 Ass'y Removal (Fig. 7-11-3)
   (1) Loosen screw ① and remove an upper flange.
   (2) Remove a guide roller ass'y, lower flange, and compression spring from a tape guide 0 arm ass'y.

3. Tape Guide 0 Ass'y Replacement and Installation
   (1) Replace the tape guide 0 ass'y with a new one and install it in the reverse order of step 2.

NOTE: As shown in Fig 7-10-4, the guide roller ass'y has a directional characteristic. The ball bearing set to the inner portion is placed upward.

   (2) Installation of Upper Flange Ass'y
   Install the upper flange ass'y referring to Section 7-10-1.
   (3) Clean the tape guide 0 ass'y with cloth moistened with cleaning fluid. After cleaning, wipe it with dry cloth two or three times.

4. Cassette Compartment Ass'y Installation
   Install the cassette compartment ass'y in the reverse order of step 1.

5. Tape Transport Perform the Check
   Check that the tape does not curl at the upper and lower flanges in the tape guide 0 ass'y. If the tape guide 0 ass'y does not satisfy the items above, adjust in accordance with the adjustment procedure of Section 8-3-2. Tape Transport Adjustment.

6. Tracking Perform the Check
   Check the tracking referring to Section 8-5.

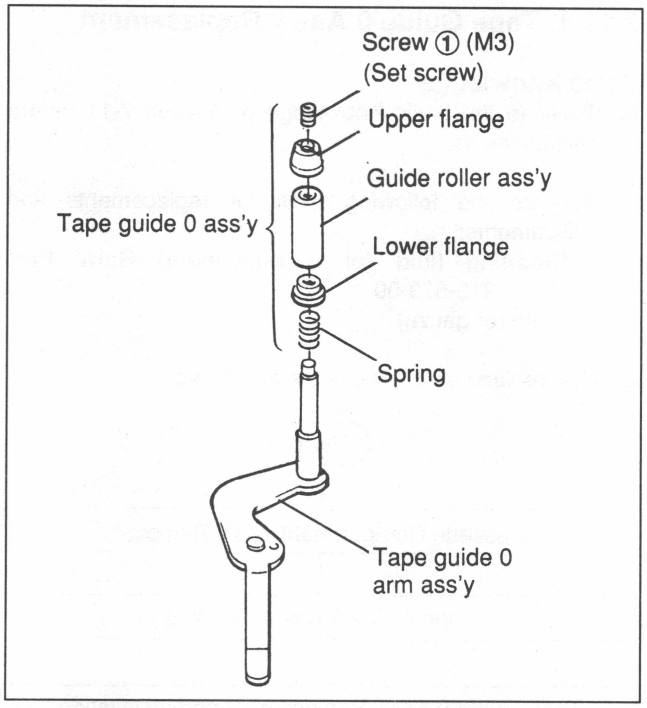

Fig.7-11-3 Tape Guide 0 Ass'y Replacement

7-11-2. Tape Guide 0 Arm Ass'y Replacement

Basic Knowledge

A. Refer to the basic Knowledge of Section 7-11 before replacement.

B. Prepare the following tools for replacements and adjustments:
- Cleaning fluid (or an equivalent) Sony Part No.: 9-919-573-00
- Cloth (or gauze)

C. The replacement flowchart is as follows:

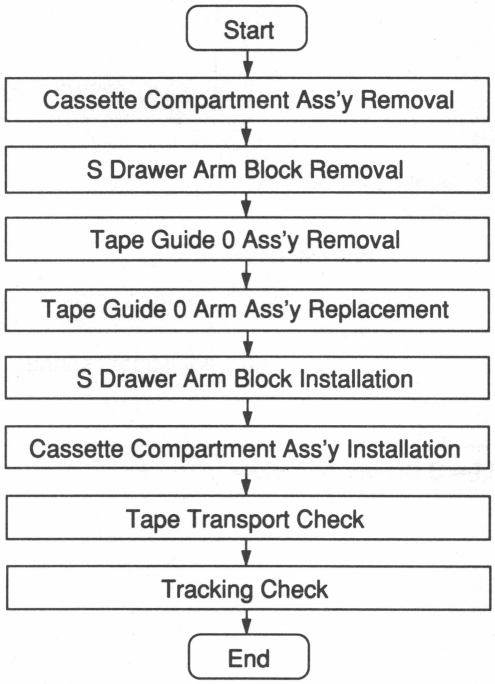

Replacement

1. Removal of Cassette Compartment Ass'y Remove the cassette compartment ass'y referring to Section 2-7-1.

2. S Drawer Arm Block Removal (Fig. 7-11-4)
   (1) Remove two of screw ①, then remove a S drawer arm block from the TTP ass'y.
   (2) Remove screw ②, then remove a bearing holder ass'y.
   - The S drawer arm spring, bearing holder audio adjustment spring, and washer are then removed together.

3. Tape Guide 0 Ass'y Removal
   Remove an upper flange without loosening screw ③, then remove a tape guide 0 ass'y.

4. Tape Guide 0 Arm Ass'y Replacement
   Replace the tape guide 0 arm ass'y with a new one, and assemble the S drawer arm block in the reverse order of steps 2 and 3.

5. S Drawer Arm Block Installation
   (1) Hook the S drawer arm spring shown in Fig. 7-11-4 on the positioning pin and install the S drawer arm block an the TTP ass'y with two of screw ①.
   (2) Clean the tape guide 0 ass'y with cloth moistened with cleaning fluid. After cleaning, wipe it with dry cloth two or three times.

6. Cassette Compartment Ass'y Installation
   Install the cassette compartment ass'y in the reverse order of step 1.

7. Tape Transport Perform the Check
   Check that the tape does not curl at the upper and lower flanges in the tape guide 0 ass'y. If the tape guide ass'y does not satisfy the items above, adjust in accordance with the adjustment procedure of Section 8-3-2. Tape Transport Adjustment.

8. Tracking Perform the Check
   Check the tracking referring to Section 8-5.

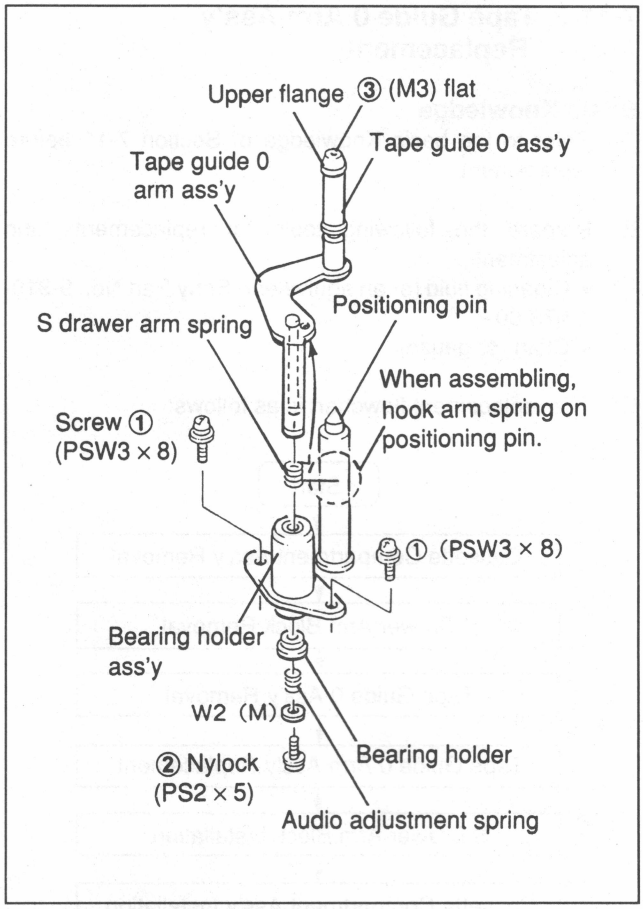

Fig.7-11-4 S Drawer Arm Block

7-11-3. Replacement of Tape Guide 0 Bearing Holder Ass'y

Basic Knowledge

A. Refer to the basic Knowledge of Section 7-11 before replacement

B. (1) The tape guide 0 bearing holder ass'y can be replaced referring to Section 7-11-2, Tape Guide 0 Arm Ass'y Replacement.
(2) Replace the tape guide 0 bearing holder ass'y as the following replacement flowchart referring to Section 7-11-2. (Fig. 7-11-5)

C. The replacement flowchart is as follows:

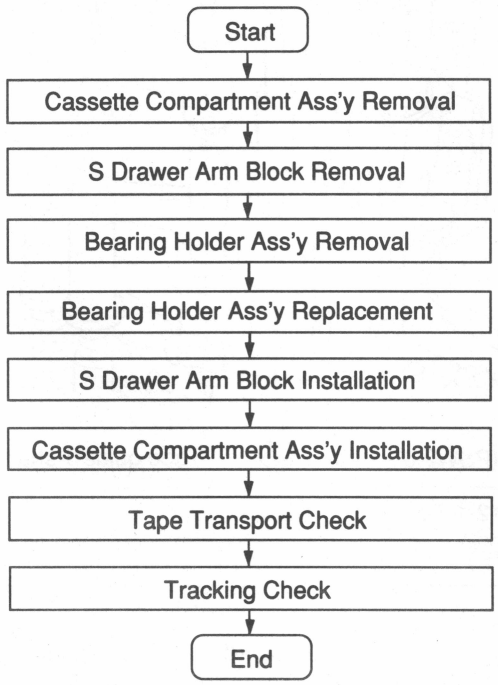

Replacement

1. Consequently follow the above replacement flowchart, and refer 7-11-2 to perform the replacement (figure 7-11-15).

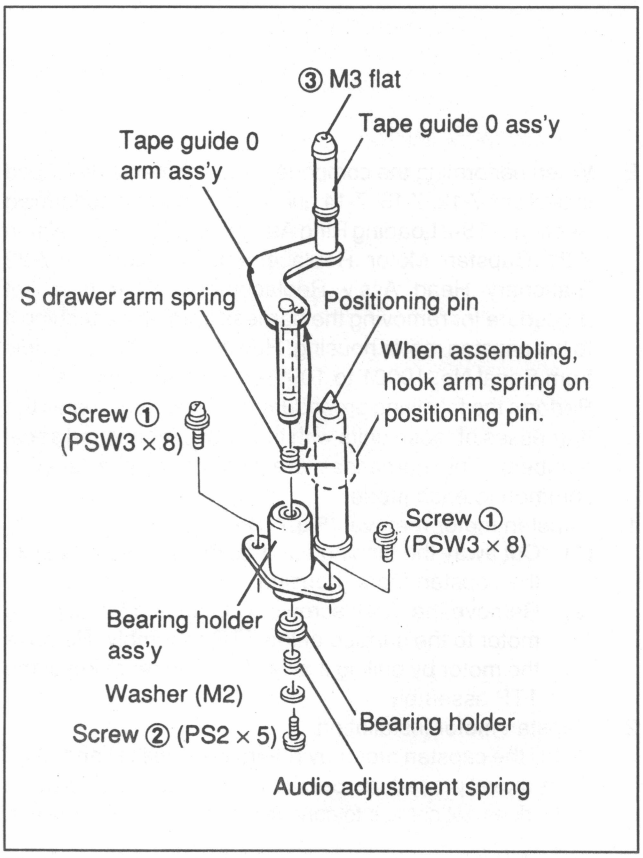

Fig.7-11-5 Tape Guide 0 Bearing Holder Ass'y Replacement

7-12. TAPE GUIDE 1 BLOCK REPLACEMENT

Basic Knowledge

A. The tape guide 1 block is composed of the components shown in Fig. 7-12-1.

B. The replacement procedures of a tape guide 1 block are explained as the following sections.
- 7-12-1. Tape Guide 1 Ass'y Replacement
- 7-12-2. Tape Guide 1 Support Shaft Replacement

C. The tape guide 1 ass'y is located near a drum ass'y. Be careful not to damage the drum ass'y during replacement. It is recommended that the drum ass'y covers with cloth for protection during replacement.

D. After the tape guide 1 block replacement is completed, check the tape transport. Adjust the tape guide height so that the lower edge of the tape runs in contact with the lower flange of the tape guide, but never occurs the tape curl at the lower flange of the tape guide.

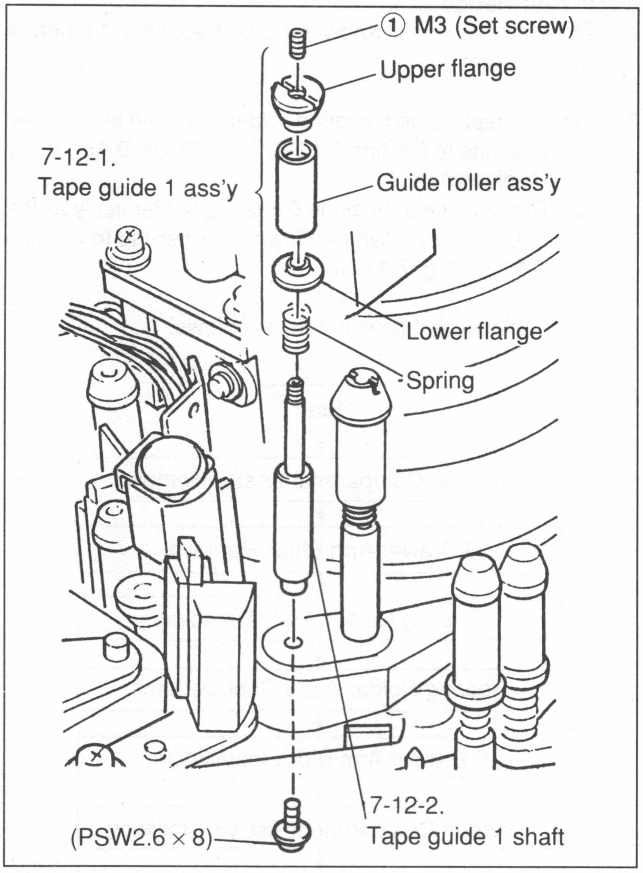

Fig.7-12-1 Tape Guide 1 Block

E. When performing the component replacements described in sections 7-12, 7-13, 7-14 and 7-15, and when performing Section 7-18-2 Loading Ring Ass'y Replacement, Section 7-21 Capstan Motor Replacement and Section 7-22 Stationary Head Ass'y Replacement, there is a set procedure for removing the harness from and attaching it to the capstan motor housing. However, for those models from Serial No. 10001 to 10909, the method differs.
Perform the following procedure to remove and install the harnesses of those units with the above mentioned serial numbers. The harnesses are positioned in a location common to each model.

1. Capstan motor removal (Fig.7-12-1 (a))
   (1) Cut away the binding band fastening the harness to the capstan motor housing.
   (2) Remove the three screws ① fastening the capstan motor to the surface of the TTP assembly. Remove the motor by pulling it away from the rear side of the TTP assembly.
2. Capstan motor installation
   Install the capstan motor by reversing steps (1) and (2) of the removal procedure. Secure the harness, making sure that it does not come into contact with the tension regulator.

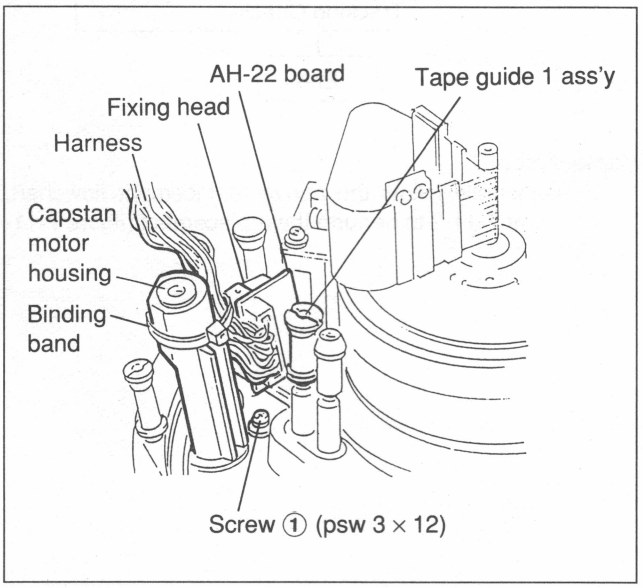

Fig.7-12-1 (a) Capstan Motor Removal

7-12-1. Tape Guide 1 Ass'y Replacement

Basic Knowledge

A. Refer to the basic Knowledge of Section 7-12 before replacement.

B. Prepare the following tools for replacement and adjustment:
- Cloth (or gauze)
- Cleaning fluid (or an equivalent)
  Sony Part No.: 9-919-573-00

C. The replacement flowchart is as follows:

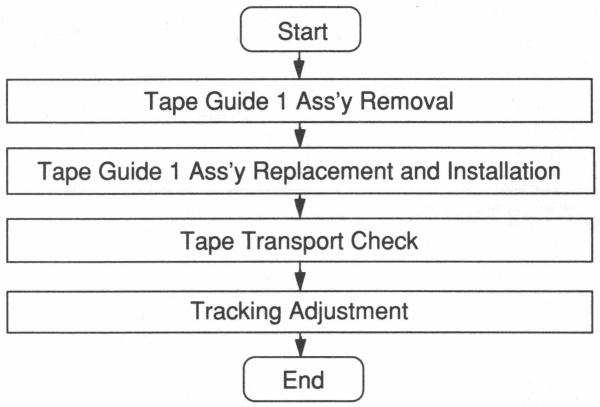

Replacement

1. Tape Guide 1 Ass'y Removal (Fig. 7-12-2)
   (1) Loosen screw ① and remove an upper flange.
   (2) Remove a guide roller ass'y, lower flange, and compression spring from the shaft.

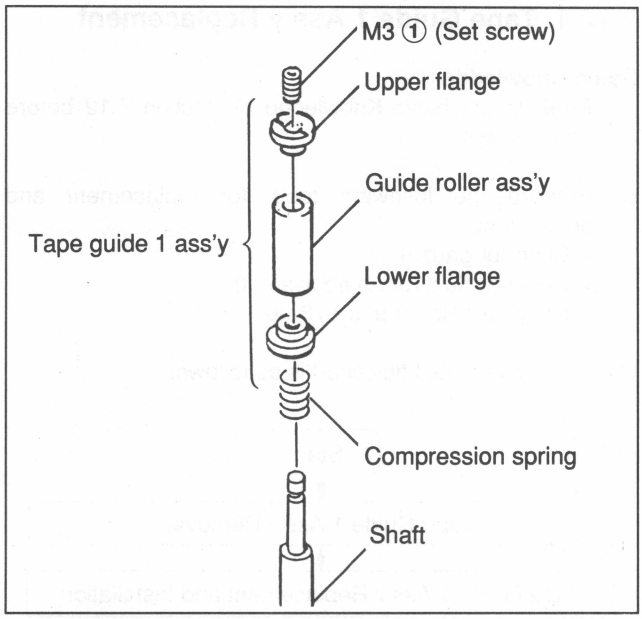

Fig.7-12-2 Tape Guide 1 Ass'y

2. Tape Guide 1 Ass'y Replacement and Installation
   (1) Replace each component with a new one and install it in the reverse order of step 1.
   - The guide roller ass'y has a directional characteristic. The ball bearing set to the inner portion is placed upward.
   - Screw the screw ① into the upper flange so that the upper surface of screw ① align with the lower edge of slant surface C inside the upper flange. After that, install the upper flange.

   (2) Clean the tape guide 1 ass'y with cloth moistened with cleaning fluid. After cleaning, wipe it with dry cloth two or three times.

3. Tape Transport Perform the Check
   The lower edge of the tape runs in contact with the lower flange of the guide, but the tape does not curl If the tape guide 1. ass'y does not Satisfy the items above, adjust in accordance with the adjustment procedure of Section 8-3-2, Tape Transport Adjustment.

4. Tracking Perform the Adjustment Refer to Section 8-5-2.

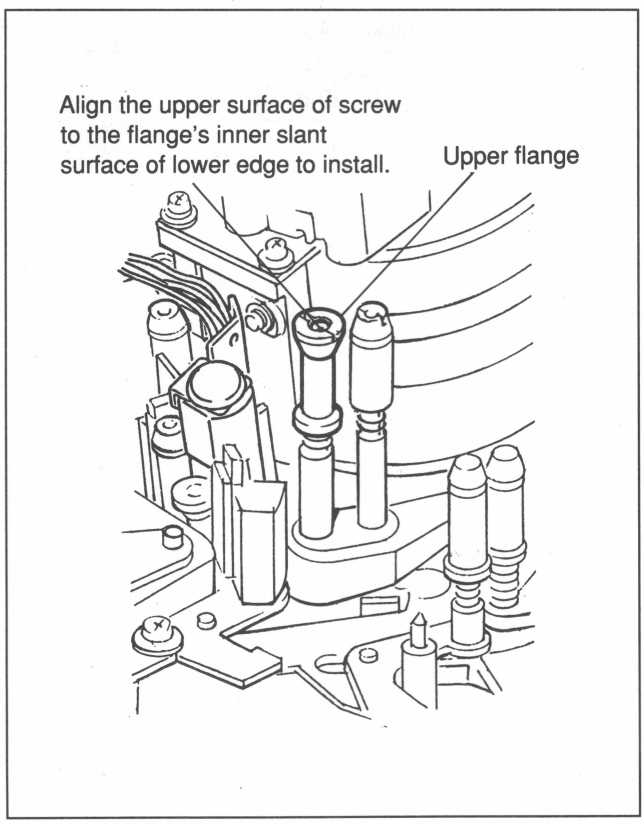

Fig.7-12-3 Tape Guide 1 Ass'y Replacement

7-12-2. Replacement of Tape Guide 1 Support Shaft

Basic Knowledge

A. Refer to the basic Knowledge of Section 7-12 before replacement.

B. Replacement of the shaft requires operation at the back of the TTP block. Raise the TTP block for this purpose.

C. Remove RM-68 board and other components during replacement. Be careful not to damage these components at that time.

D. Screw ① shown in Fig. 7-12-4 is the adjustment screw of an upper flange in which the height of a guide roller was already adjusted. Do not loosen or remove the adjustment screw except when the upper flange is replaced or the tape transport is adjusted.

E. Prepare the following tools for replacement:
- Cloth (or gauze)
- Cleaning fluid (or an equivalent)
  Sony Part No.: 9-919-573-00
- Nipper
- Bundling band
  Sony Part No.: 3-645-566-01
- Locking compound

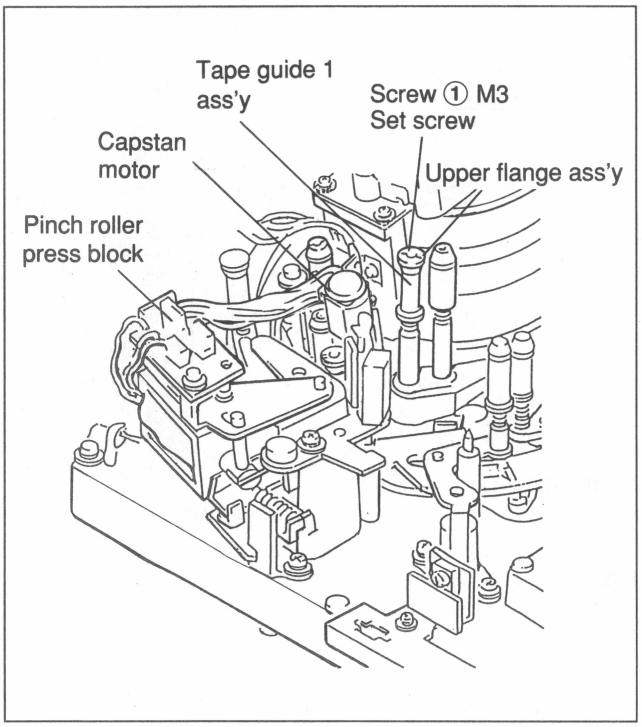

Fig.7-12-4 Tape Guide 1 Support Shaft Replacement

F. The replacement flowchart is as follows:

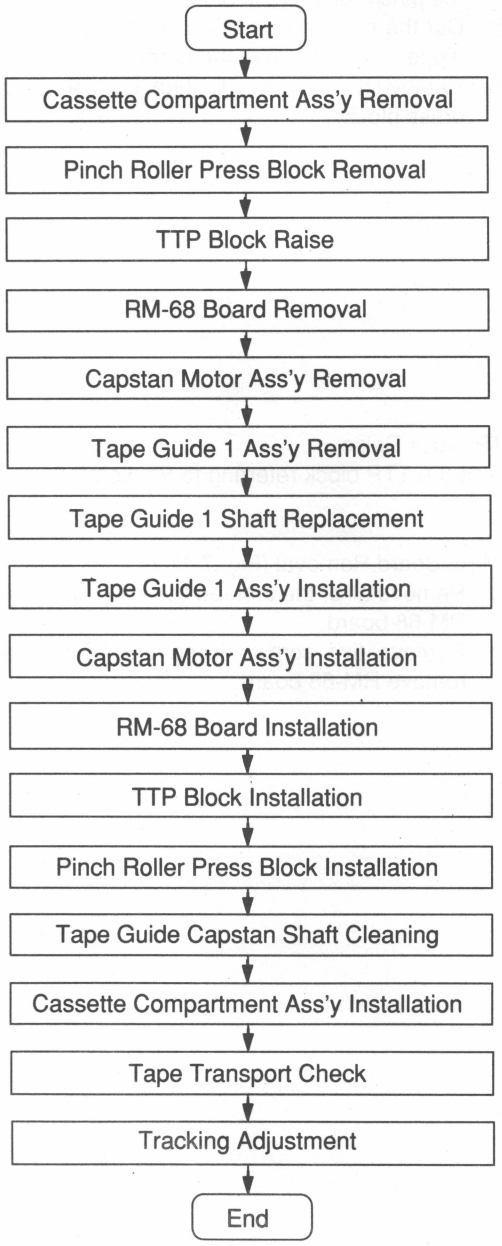

Replacement

1. Cassette Compartment Ass'y Removal
   Refer to Section 2-7-1.

2. Pinch Roller Press Block Removal (Fig. 7-12-5)
   (1) Disconnect connector CN854 from PD-35 board an the pinch roller press block.
   (2) Cut the binding band fixed on PD-35 board using nippers, then remove the harness.
   (3) Remove two of screw ①, then remove a pinch roller press block.

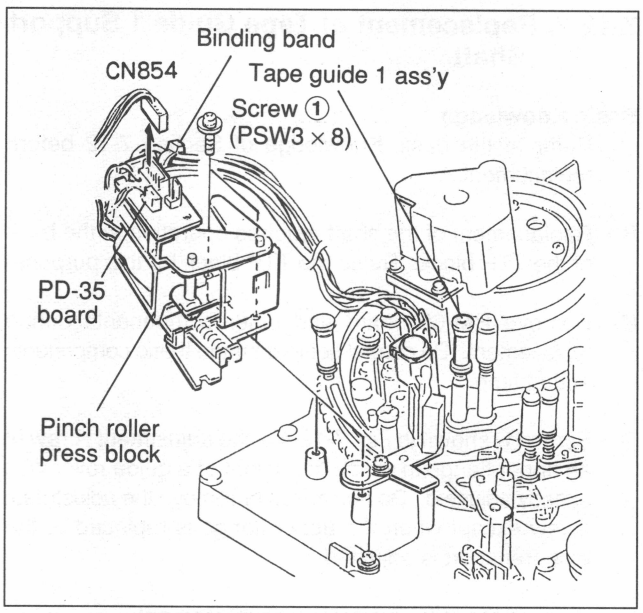

Fig.7-12-5 Pinch Roller Press Block Removal

3. TTP Block Raise
   Raise the TTP block referring to Section 2-8.

4. RM-68 Board Removal (Fig. 7-12-6)
   (1) Remove all of the thirteen connectors connected to RM-68 board.
   (2) Remove five screws fixing the TTP block, then remove RM-68 board.

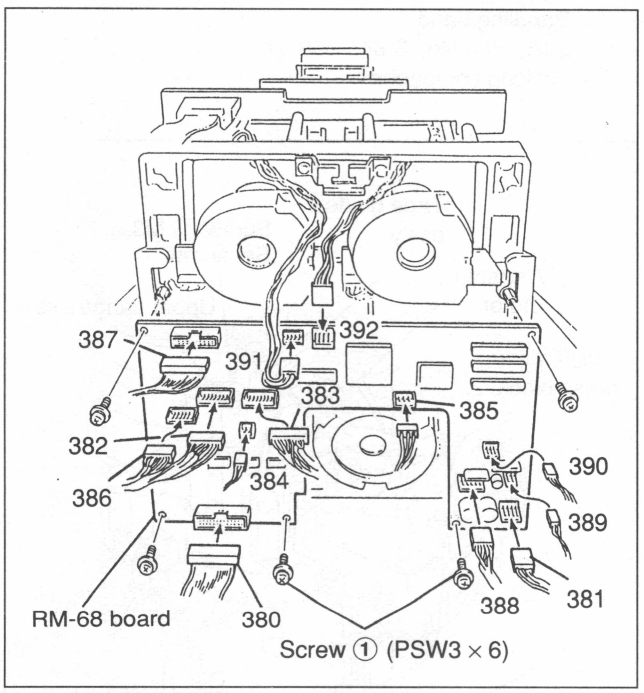

Fig.7-12-6 RM-68 Board Removal

5. Capstan Motor Ass'y Removal (Fig. 7-12-7)
   (1) Remove the nylon rivet fastening to the housing of Capstan motor and Harness guard.
   (2) Remove three of screws ④ from the top surface of TTP and remove the capstan motor ass'y through the back side.

NOTE: Be careful not to damage the shaft when removing or installing the capstan motor ass'y.

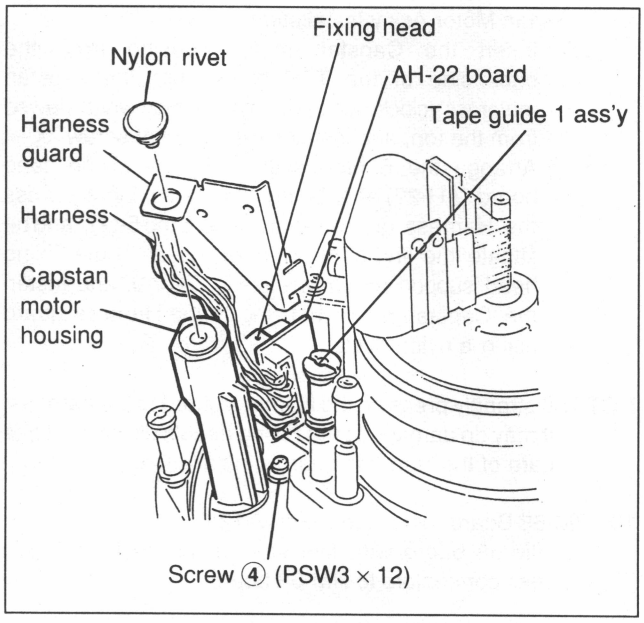

Fig.7-12-7 Capstan Motor Ass'y Removal

6. Tape Guide 1 Ass'y Removal (Fig. 7-12-8)
   (1) Remove an upper flange without loosening screw ①.
   (2) Remove a guide roller ass'y, lower flange, and compression spring from the shaft.

7. Tape Guide 1 Shaft Replacement (Fig. 7-12-8)
   (1) Remove screw ② from the back side of the TTP block.
   (2) Install the new shaft with screw ②.
   (3) Apply locking compound to screw ②.

8. Tape Guide 1 Ass'y Installation
   Install the tape guide 1 Ass'y in the tape guide 1 shaft in the reverse order of step 6.

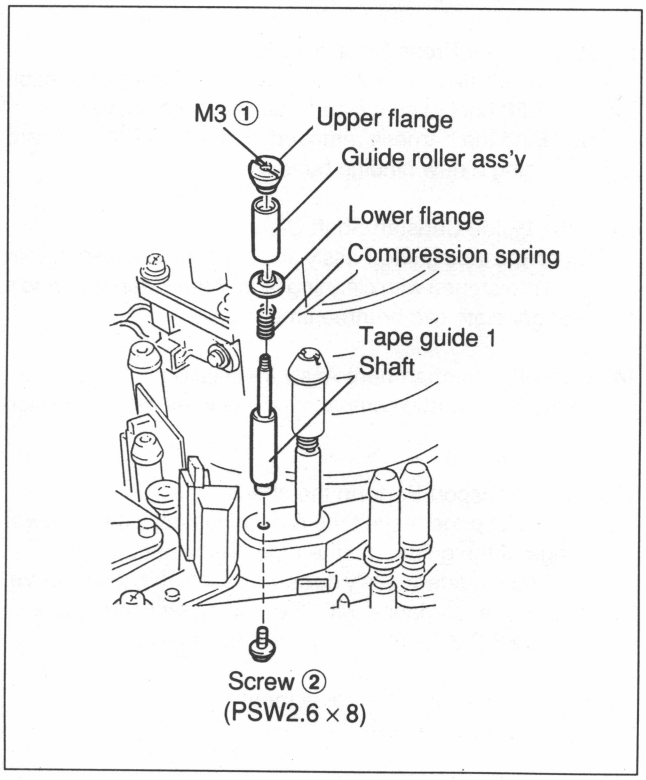

Fig.7-12-8 Tape Guide 1 Shaft Replacement

9. Capstan Motor Ass'y Installation
   (1) Insert the Capstan motor housing from the back side of the TTP block, turn the capstan motorass'yclockwise to removing a play when viewed from the top, and install it with three of screw ④.
   (2) Arrange the 6 harnesses from the Fixing head board (AH-22) after being just above. Lightly press the Harness guard removed at Step 5-(1), and be situate the end of the Harness guard at the Fixing head support as shown in Fig. 7-12-9, and fasten the Capstan motor housing to the Harness guard using a nylon rivet.

NOTE: If strongly pressing the Harness guard to the harness, it may do damage to the Fixing head's direction. Take care of the Harness guard's installation.

10. RM-68 Board Installation (Fig. 7-12-6)
    Fix RM-68 board with five screws and insert thirteen harness connectors to RM-68 board.

11. TTP Block Movement
    Place the TTP block to the former horizontal position in the reverse order of step 3, then fix it.

12. Pinch Roller Press Block Installation
    (1) Install the pinch roller press block referring to Section 7-20 (including a clearance check/adjustment).
    (2) Bind the harness removed in step 2 to PD-35 board using a new binding band.

13. Tape Guide Capstan Shaft Cleaning
    Clean the tape guide 1 ass'y and capstan motor shaft with cloth moistened with cleaning fluid. After cleaning, wipe it with dry cloth two or three times.

14. Cassette Compartment Ass'y Installation
    Install the cassette compartment ass'y referring to Section 2-7-1.

15. Tape Transport Perform the check
    The lower edge of the tape runs in contact with the lower flange of the guide, but the tape does not curl.
    If the tape guide 1. ass'y does not satisfy the items above, adjust in accordance with the adjustment procedure of Section 8-3-2, Tape Transport Adjustment.

16. Tracking Perform the Adjustment
    Refer to Section 8-5-2.

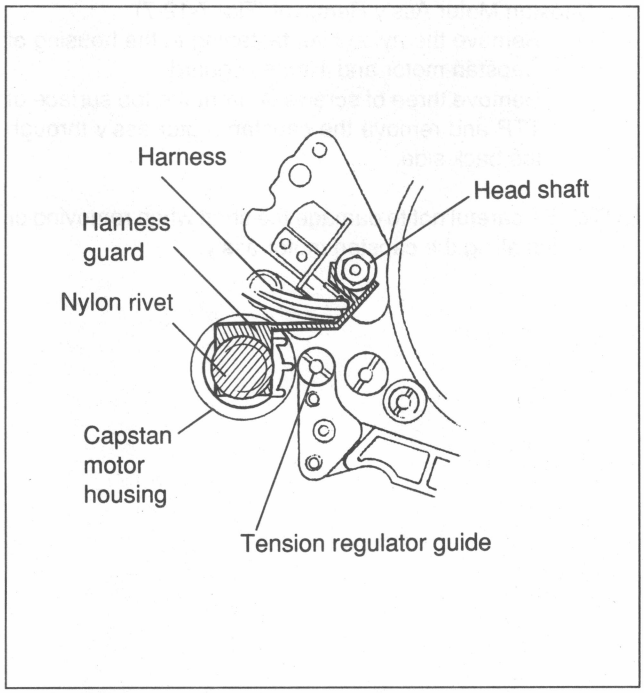

Fig.7-12-9 Harness Guard Installation

7-13. TAPE GUIDE 2 BLOCK REPLACEMENT

7-13-1. Tape Guide 2 Ass'y Replacement

Basic Knowledge

A. A tape guide 2 ass'y is placed beside a tape guide 1 ass'y. The replacement procedures of the tape guide 2 ass'y are almost same as the tape guide 1 ass'y referring to Section 7-12-1. (Fig. 7-13-1)

B. After replacement, check the tape transport. Check the height so that the upper edge of the tape stably runs in contact with the upper flange without curl. If the above is not satisfied in iteme B, perform the 8-3-2 Tape Transport Adjustment.

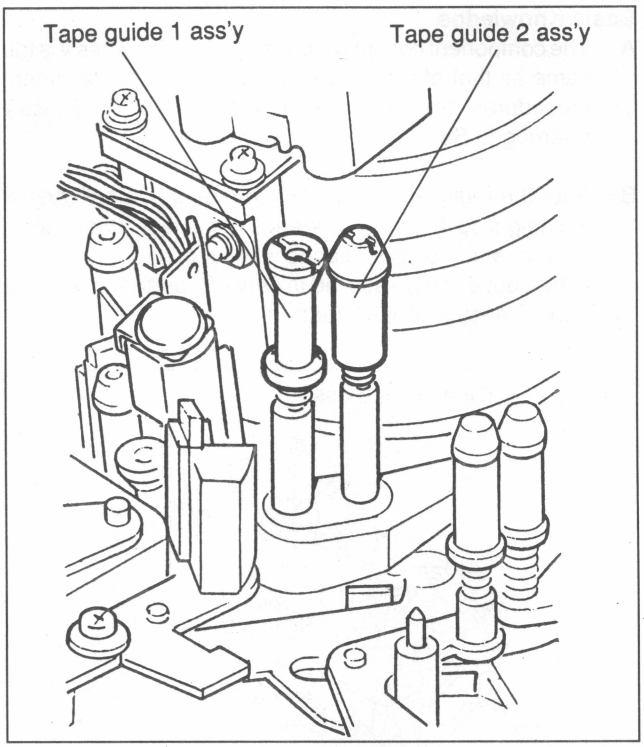

Fig.7-13-1 Tape Guide 2 Ass'y Replacement

7-13-2. Tape Guide 2 Shaft Replacement

Basic Knowledge

A. A tape guide 2 shaft is placed beside a tape guide 1 shaft, and these pants are the same, The replacement procedures are the same as the tape guide 1 shaft referring to section 7-12-2. (Fig. 7-13-2)

B. After replacement, check the tape transport. Check the height so that the upper edge of the tape stably runs in contact with the upper flange without curl. If the above is not satisfied in iteme B, perform the 8-3-2 Tape Transport Adjustment.

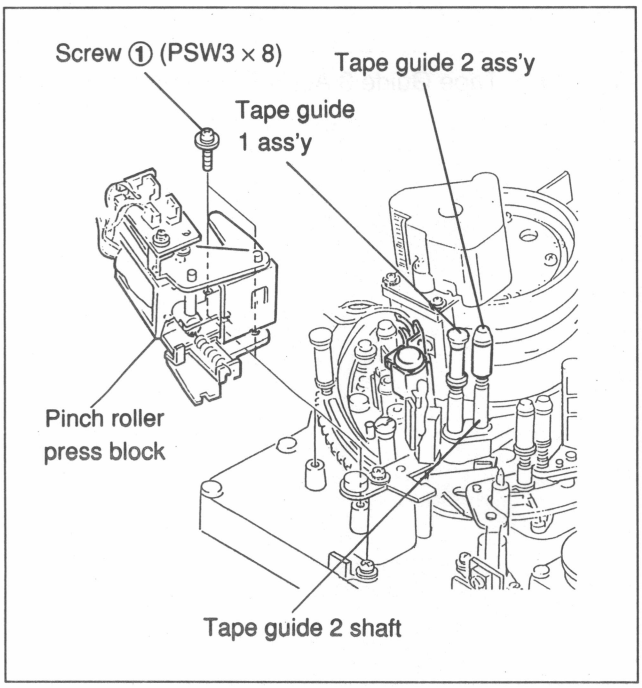

Fig.7-13-2 Tape Guide 2 Shaft Replacement

7-14. TAPE GUIDE 3 BLOCK REPLACEMENT

7-14-1. Tage Guide 3 Ass'y Replacement

Basic Knowledge

A. The component configuration of a tape guide 3 ass'y is the same as that of a tape guide 1 ass'y. The replacement procedures are the same as the tape guide 2 ass'y referring to Section 7-12-1 (Fig. 7-14-1)

B. After the replacement, check the tape transport. Adjust the height so that the upper edge of the tape stably run in contact with the upper flange without curl.
If the above is not satisfied in iteme B, perform the 8-3-2 Tape Transport Adjustment.

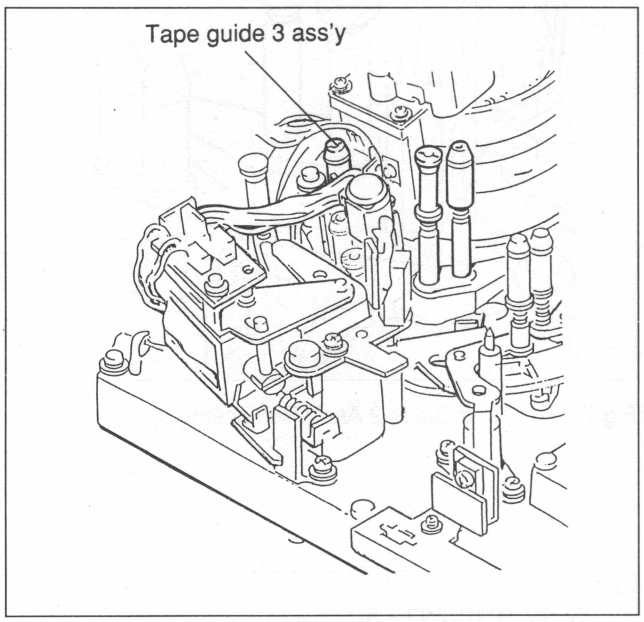

Fig.7-14-1 Tape Guide 3 Ass'y Replacement

7-14-2. Tape Guide 3 Shaft Replacement

Basic Knowledge

A. The replacement procedures of a tape guide 3 shaft are almost the same as a tape guide ① shaft referring to Section 7-12-2.

B. After replacement, check the tape transport. Check the height so that the upper edge of the tape stably runs in contact with the upper flange without curl.
If the above is not satisfied in iteme B, perform the 8-3-2 Tape Transport Adjustment.

C. The replacement flowchart is as follows:

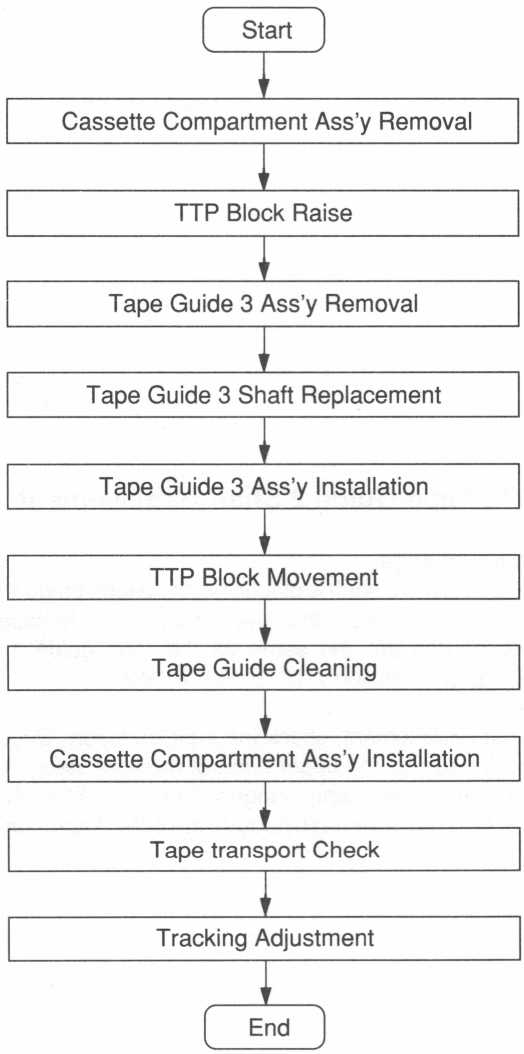

7-15. TAPE GUIDE 4 BLOCK REPLACEMENT.

7-15-1. Tape Guide 4 Ass'y Replacement

Basic Knowledge

A. The component configuration of a tape guide 4 ass'y is the same as that of a tape guide 1 ass'y. The replacement procedures are the same as the tape guide 1 ass'y referring to Section 7-12-1.

B. After replacement, check the tape transport. Check the height so that the upper edge of the tape stably runs in contact with the upper flange without curl.
If the above is not satisfied in iteme B, perform the 8-3-2 Tape Transport Adjustment.

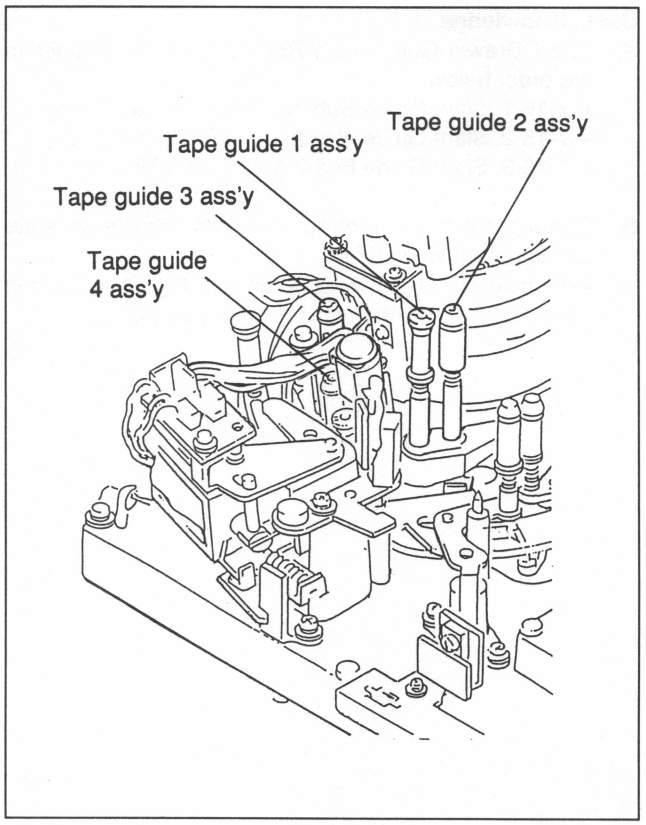

Fig.7-15-1 Tape Guide 4 Ass'y Replacement

7-15-2. Tape Guide 4 Shaft Replacement

Basic Knowledge

A. The Replacement procedures of a tape guide 4 shaft are the same as a tape guide 1 shaft referring to Section 7-12-2.

B. After replacement, check the tape transport. Check the height so that the upper edge of the tape stably runs in contact with the upper flange without curl.
If the above is not satisfied in iteme B, perform the 8-3-2 Tape Transport Adjustment.

7-16. SLANT GUIDE (T DRAWER GUIDE) ASS'Y REPLACEMENT

Basic Knowledge

A. The T Drawer Guide Ass'y Replacement is explained in the order below.
- 7-16-1. Slant Guide Sub-arm Ass'y Replacement
- 7-16-2. Slant Guide Arm Ass'y Replacement
- 7-16-3. Slant Guide Bearing Ass'y Replacement

B. Screw ① can be easily removed by removing the cassette compartment stay plate.
- Remove six of screw ② shown in Fig. 7-16-2, then remove the cassette compartment stay plate.

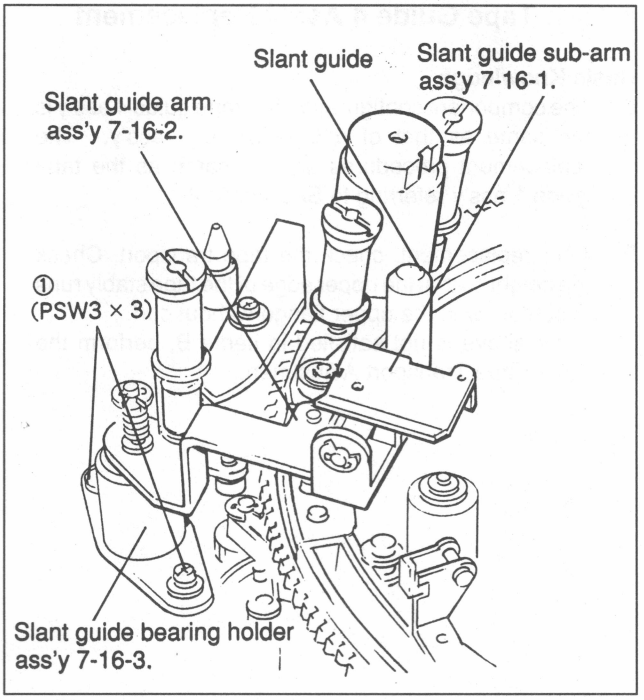

Fig.7-16-1 T Drawer Guide Ass'y

C. Above mentioned each ass'y of the T drawer guide ass'y is replaced after the slant guide ass'y is removed from the TTP block.
- Remove two of screw ① shown in Fig. 7-16-3, then remove the slant guide ass'y.

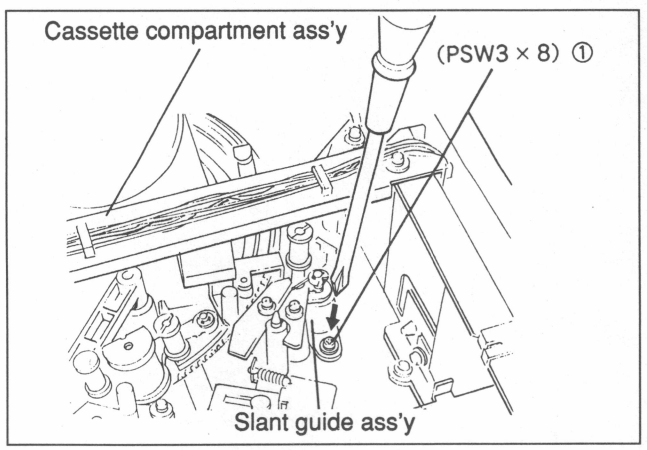

Fig.7-16-3 Slant Guide Ass'y Remove

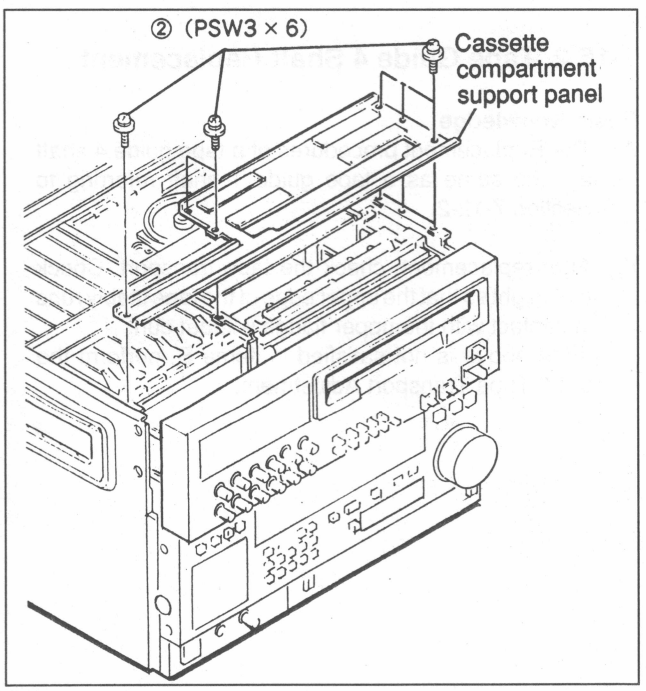

Fig.7-16-2 Cassette Compartment Stay Pate Remove

7-16-1. Slant Guide Sub-arm Ass'y Replacement

Basic Knowledge

A. Refer to the basic Knowledge of Section 7-16 before replacement.

B. Prepare the following tools for replacement:
- Cloth (or gauze)
- Cleaning fluid (or an equivalent)
  Sony Part No.: 9-919-573-00

C. The replacement flowchart is as follows:

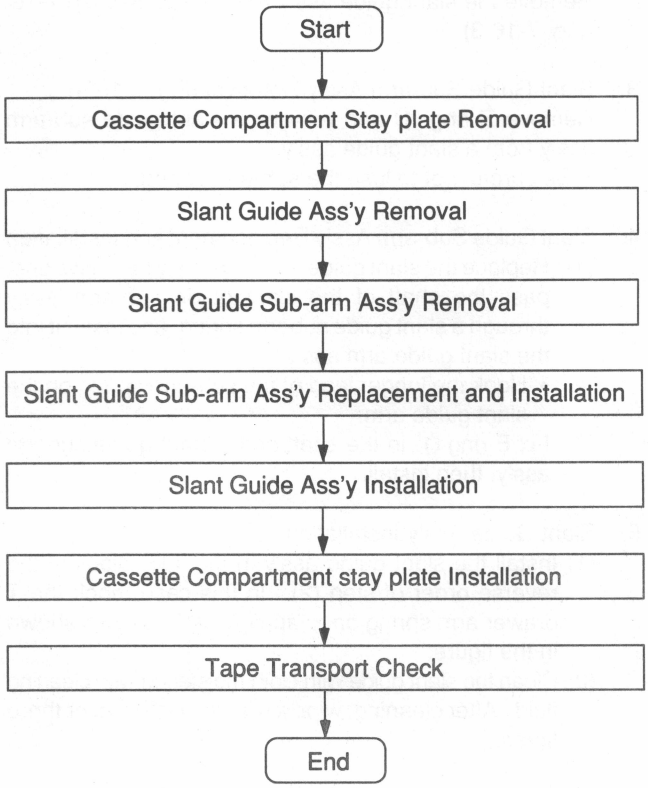

Replacement

1. Cassette Compartment stay plate Removal
   Remove the cassette compartment stay plate referring to Section 7-16. (Fig. 7-16-2)

2. Slant Guide Ass'y Removal
   Remove the slant guide ass'y referring to Section 7-16. (Fig. 7-16-3)

3. Slant Guide Sub-arm Ass'y Removal (Fig. 7-16-4)
   Remove E ring ① and remove a slant guide sub-arm ass'y from a slant guide ass'y.
   - Be careful not to lose the sub-arm spring.

4. Slant Guide Sub-arm Ass'y Replacement and Installation
   (1) Replace the slant guide sub-arm ass'y by a new one, pass the shaft of the slant guide sub-arm ass'y through a slant guide subarm spring, and insert it into the slant guide arm ass'y.
   - Hook the longer lead of the sub-arm spring on the slant guide arm.
   (2) Fix E ring ① in the shaft of the slant guide subarm ass'y, then install.

5. Slant Guide Ass'y Installation
   (1) Install the slant guide ass'y in the TTP block in the reverse order of step (2). In this case, hook the T drawer arm spring on a tape guide 5 ass'y as shown in the figure.
   (2) Clean the slant guide with cloth moistened with cleaning fluid. After cleaning, wipe it with dry cloth two or three times.

6. Cassette Compartment Stay Plate Installation
   Install the cassette compartment stay plate referring to Section 7-16.

7. Perform the Check of Tape Transport
   Check the height so that the upper and lower edge of the tape runs in the upper and lower flange without curl. If the above stated is not satisfied, perform the 8-3-2 Tape Transpoint Adjustment.

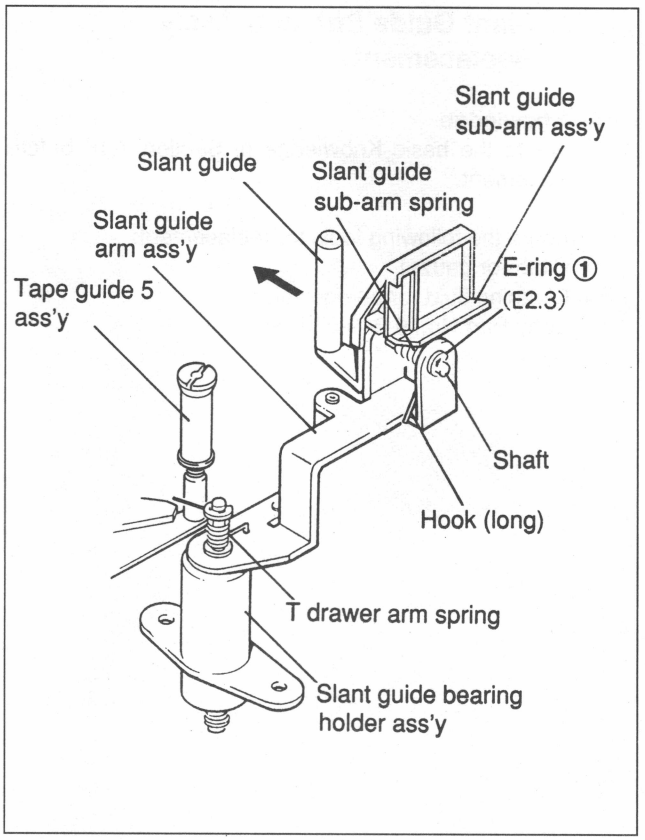

Fig.7-16-4 Slant Guide Ass'y

7-16-2. Slant Guide Arm Ass'y Replacement

Basic Knowledge

A. Refer to the basic knowledge of Section 7-16 before replacement.

B. Prepare the following tools for replacement:
- Cloth (or gauze)
- Cleaning fluid (or an equivalent)
  Sony Part No.: 9-919-573-00

C. The replacement flowchart is as follows:

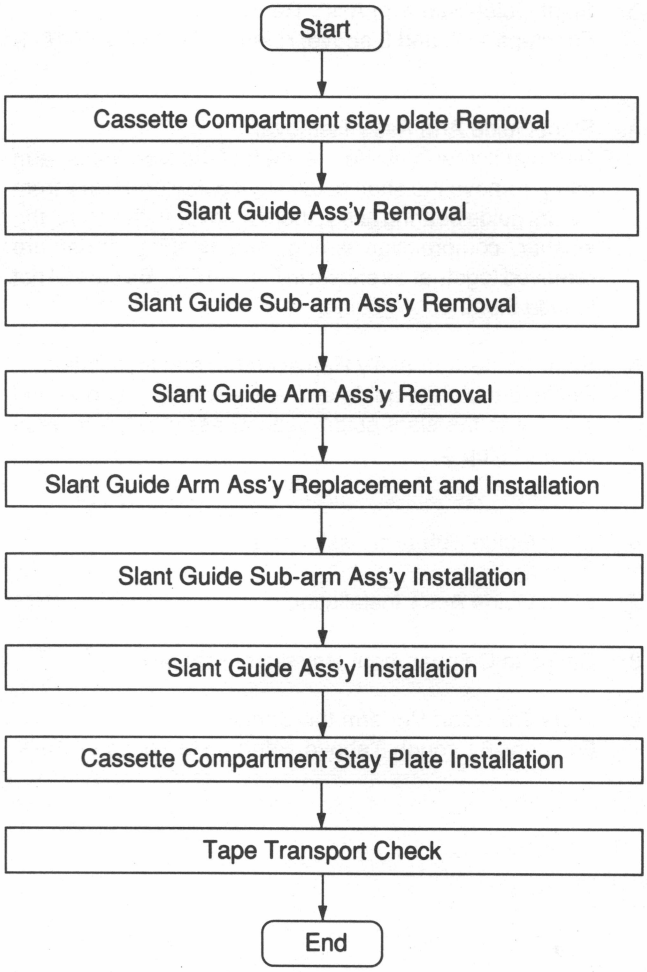

Replacement

1. Cassette Compartment stay plate Removal
2. Slant Guide Ass'y Removal
3. Slant Guide Sub-arm Ass'y Removal
   For steps 1, 2, and 3 above, referring to Section 7-16-1.
4. Slant Guide Arm Ass'y Removal
   Remove screw ③ fixing the shaft of the slant guide arm ass'y, remove the shaft of the slant guide arm ass'y from a slant guide bearing ass'y, then remove. In this case, the washer, compression spring, and bearing holder are removed together as shown in Fig. 7-16-5. Be careful not to lose them.
5. Slant Guide Arm Ass'y Replacement and Installation
   Replace the slant guide arm ass'y with a new one and install it in the slant guide bearing ass'y in the reverse order of step 4.
6. Slant Guide Sub-arm Ass'y Installation
7. Slant Guide Ass'y Installation
8. Cassette Compartment stay plate Installation
9. Tape Transport Perform the Check
   For steps 6 through 9 above, referring to Section 7-16-1.

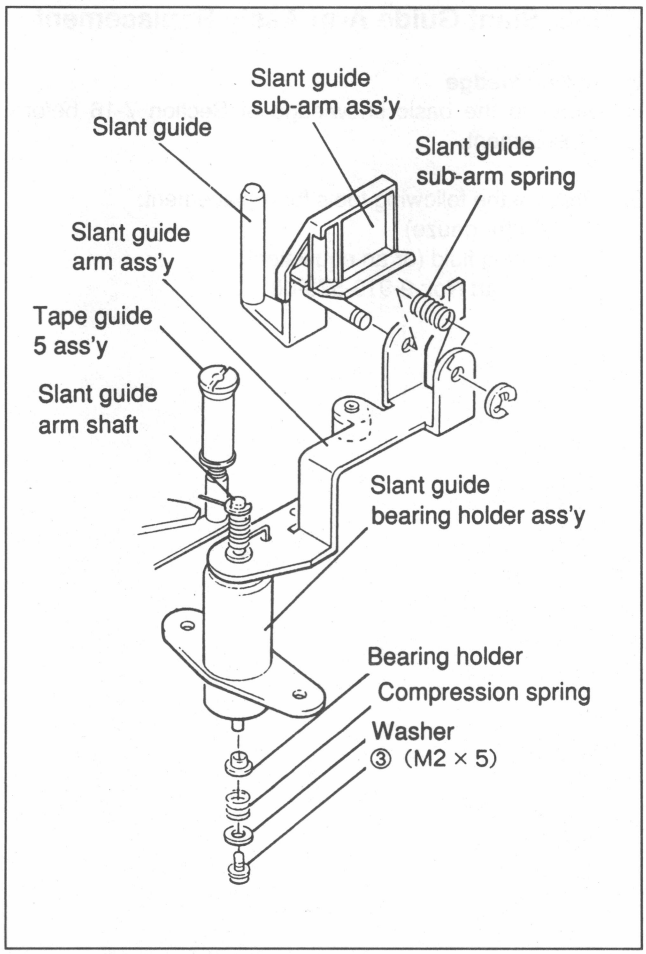

Fig.7-16-5 Slant Guide Arm Ass'y Removal

7-16-3. Slant Guide Bearing Ass'y Replacement

Basic Knowledge

A. Refer to the basic knowledge of Section 7-16 before replacemen

B. Prepare the following tools for replacement:
- Cloth (or gauze)
- Cleaning fluid (or an equivalent)
  Sony Part No: 9-919-573-00

C. The flowchart for replacement is as follows:

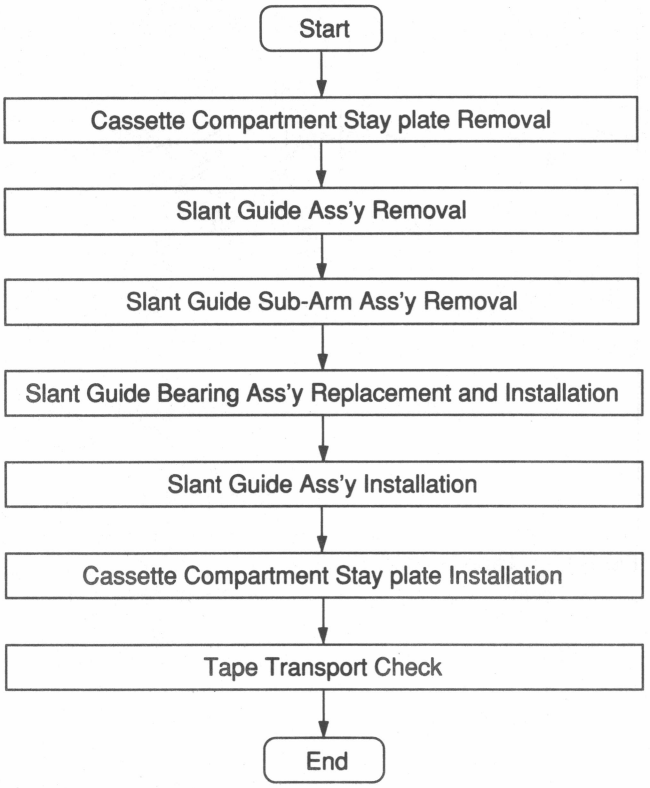

Replacement

1. Cassette Compartment stay plate Removal
2. Slant Guide Ass'y Removal
3. Slant Guide Arm Ass'y Removal
   For steps 1, 2, and 3 above, referring to Section 7-16-2.
4. Slant Guide Bearing Ass'y Replacement and Installation (Fig. 7-16-6)
   Replace the slant guide bearing ass'y with a new one and install a bearing ass'y in the reverse order of step 4 in Section 7-16-2.
5. Slant Guide Ass'y Installation
6. Cassette Compartment stay plate Installation
7. Tape Transport Perform the Check
   For steps 5, 6, and 7 above, referring to Section 7-16-1.

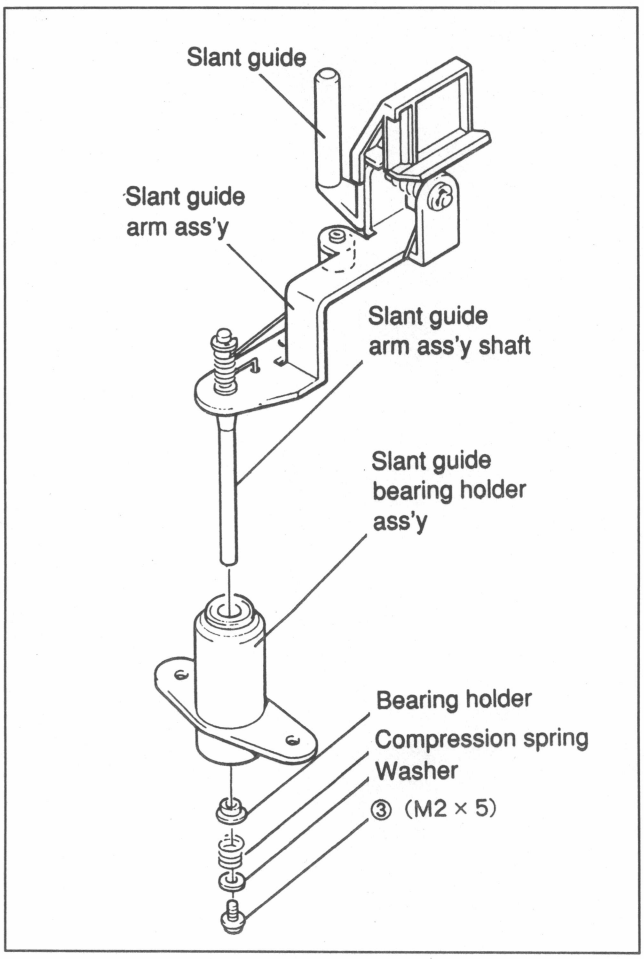

Fig.7-16-6 Slant Guide Bearing Ass'y Replacement

7-17. TAPE GUIDE 5 BLOCK REPLACEMENT

Basic Knowledge

A. The Tape Guide 5 Block Replacement is explained in the order below. (Fig. 7-17-1)
- 7-17-1. Tape Guide 5 Ass'y Replacement
- 7-17-2. Tape Guide 5 Base Ass'y Replacement
- 7-17-3. Pinch Roller Guide Replacement

B. The tape guide 5 block is replaced after a cassette compartment ass'y is removed. For the removal of the cassette compartment ass'y, refer to Section 2-7-1.

C. After replacement, check the tape transport. Confirm that the upper and lower edges of the tape without curl.

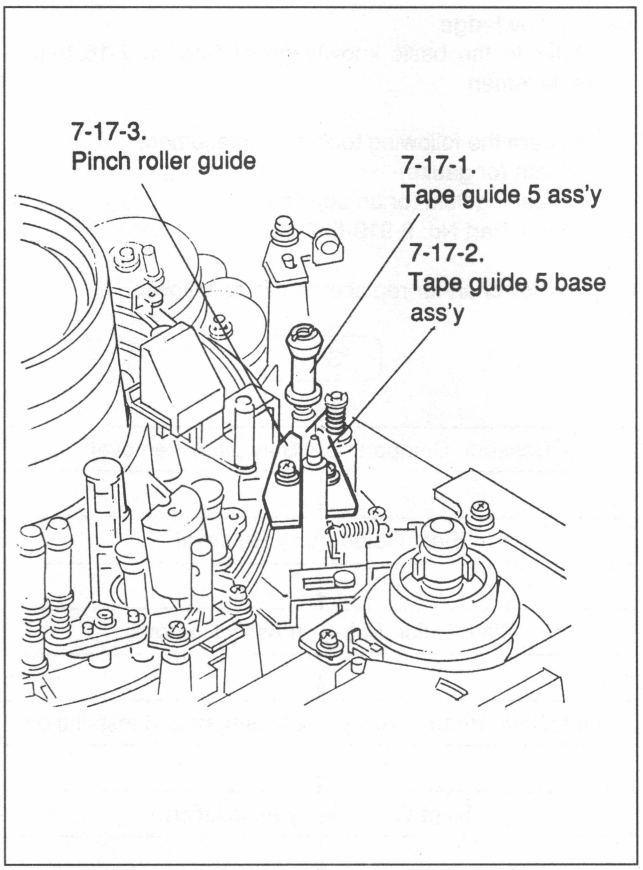

Fig.7-17-1 Tape Guide 5 Block

7-17-1. Tape Guide 5 Ass'y Replacement

Basic Knowledge

A. Refer to the basic knowledge of Section 7-17 before replacement.

B. The tape guide 5 ass'y is composed of the following components. (Fig. 7-17-2)
- Screw (M3 set screw)
- Upper flange S
- Guide roller ass'y
- Lower flange
- Compression spring

C. This section describes the replacement procedure of the tape guide 5 ass'y. Therefore, replace them in accordance with this procedure when each component replacement is required.

D. When an upper flange S replacement is not required remove screw ① together with upper flange S without loosening or removing it.

E. Prepare the following tools for replacement:
- Cloth (or gauze)
- Cleaning fluid (or an equivalent)
  Sony Part No.: 9-919-573-00

F. The replacement flowchart is as follows:

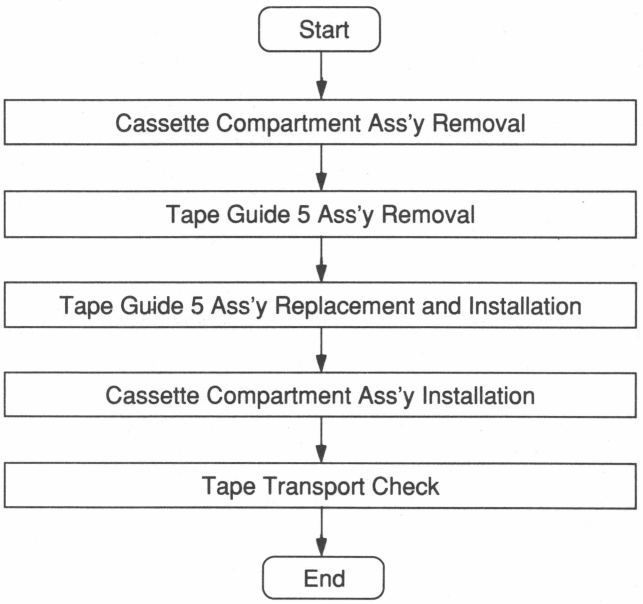

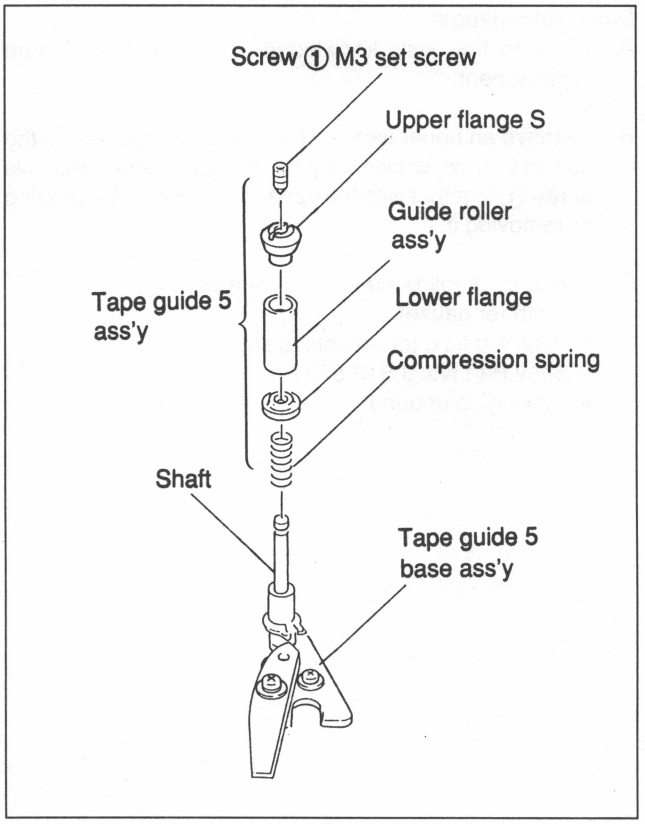

Fig.7-17-2 Tape Guide 5 Ass'y Replacement

Replacement

1. Cassette Compartment Ass'y Removal
   Remove a cassette compartment ass'y referring to Section 2-7-1.

2. Tape Guide 5 Ass'y Removal
   (1) Remove an upper flange S.
   (2) Remove the guide roller ass'y, lower flange, andcompression spring from a shaft of a base ass'y.

3. Tape Guide 5 Ass'y Replacement and Installation
   (1) Replace a tape guide 5 ass'y with a new one and install it in the reverse order of step 2.
   (2) Clean the tape guide 5 ass'y with cloth moistened with cleaning fluid. After cleaning, wipe it with dry cloth two or three times.

4. Cassette Compartment Ass'y Installation
   Install the cassette compartment ass'y in the reverse order of step 1.

5. Tape Transport Perform the Check
   Perform the Check of Tape Transport Check the height so that the upper and lower edge of the tape runs in the upper and lower flange without curl. If the above stated is not satisfied, perform the 8-3-2 Tape Transport Adjustment.

7-17-2. Tape Guide 5 Base Ass'y Replacement

Basic Knowledge

A. Refer to the basic knowledge of Section 7-17 before replacement.

B. Remove an upper flange which height is adjusted to the correct position for the tape guide 5 ass'y removal. Remove screw ① together with the upper flange without loosening or removing it.

C. Prepare the following tools for replacement:
- Cloth (or gauze)
- Cleaning fluid (or an equivalent)
  Sony Part No: 9-919-573-00
- Locking compound

D. The replacement flowchart is as follows:

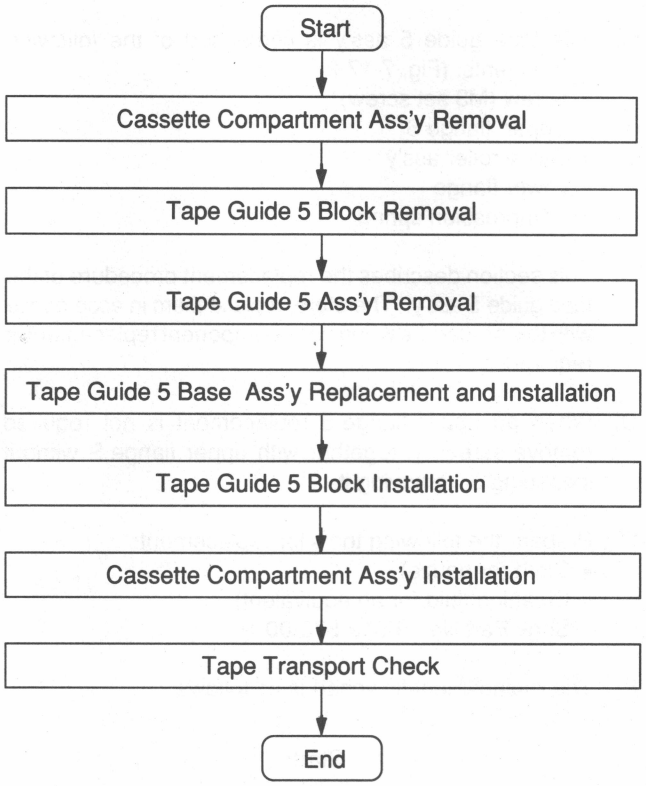

Replacement

1. Cassette Compartment Ass'y Removal
   Remove the cassette compartment ass'y referring to Section 2-7-1.

2. Tape Guide 5 Block Removal (Fig. 7-17-3)
   (1) Remove screw ② fixing a tape guide 5 base ass'y, then remove the tape guide 5 block ass'y.
   (2) Remove screw ③, then remove a pinch roller guide from the tape guide 5 base ass'y. (Fig. 7-17-4)

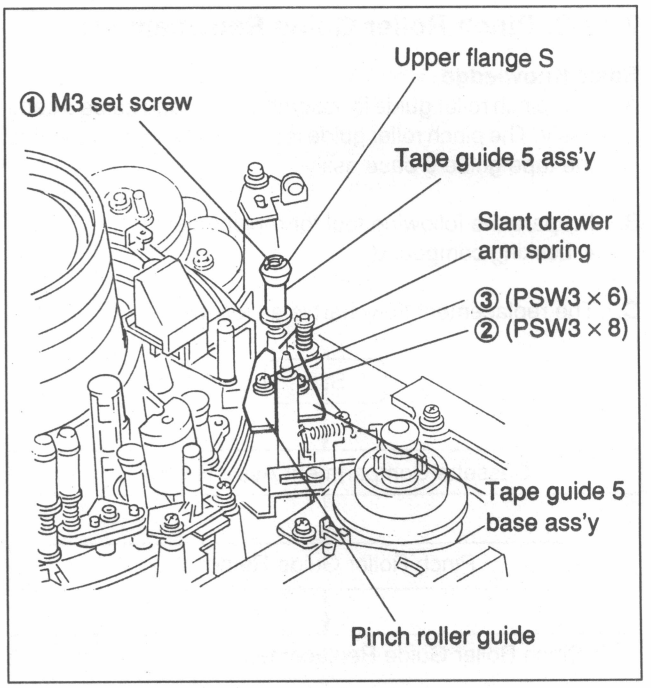

Fig.7-17-3 Tape Guide Block Removal

3. Tape Guide 5 Ass'y Removal (Fig. 7-17-4)
   (1) Remove an upper flange with screw ① attached.
   (2) Remove the guide roller ass'y, lower flange, and compression spring from the tape guide 5 base ass'y and remove the tape guide 5 ass'y.

4. Tape Guide 5 Base Ass'y Replacement and Installation
   Replace the tape guide 5 base ass'y with a new one and install it in the reverse order of step 3.

5. Tape Guide 5 Block Installation
   (1) Install the tape guide 5 block in the TTP block in the reverse order of step 2.
   (2) Apply locking compound to screws ② and ③.
   (3) Clean the tape guide 5 ass'y with cloth moistened with cleaning fluid. After cleaning, wipe it with dry cloth two or three times.

6. Cassette Compartment Ass'y Installation
   Install the cassette compartment ass'y in the reverse order of step 1.

7. Tape Transport Perform the Check
   Perform the Check of Tape Transport Check the height so that the upper and lower edge of the tape runs in the upper and lower flange without curl. If the above stated is not satisfied, perform the 8-3-2 Tape Transprt Adjustment.

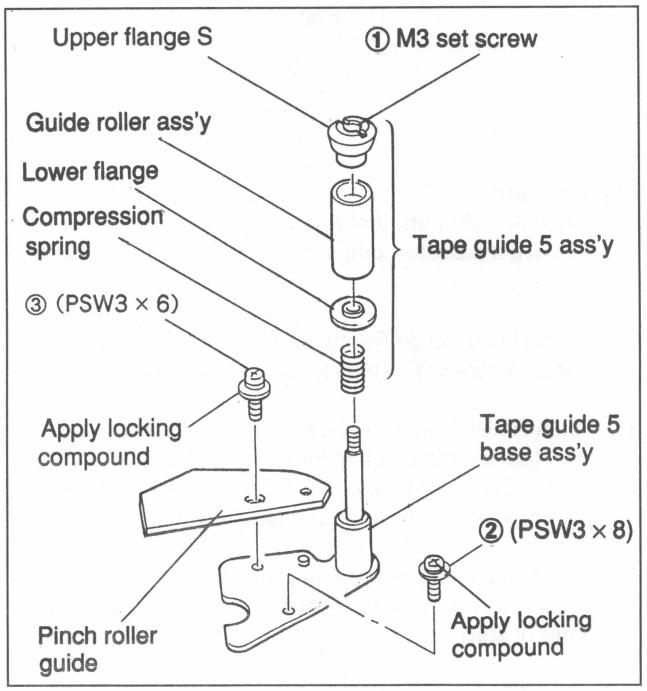

Fig.7-17-4 Tape Guide 5 Base Ass'y Replacement

7-17-3. Pinch Roller Guide Replacement

Basic Knowledge

A. The pinch roller guide is assembled in a tape guide 5 base ass'y. The pinch roller guide is replaced without removing the tape guide 5 base ass'y.

B. Prepare the following tool for replacement:
- Locking compound

C. The replacement flowchart is as follows:

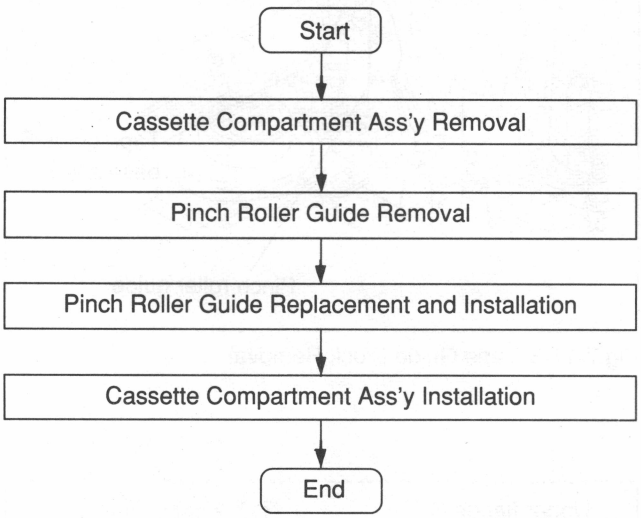

Replacement

1. Cassette Compartment Ass'y Removal
   Remove a cassette compartment ass'y referring to Section 2-7-1.

2. Pinch Roller Guide Removal (Fig. 7-17-5)
   Remove screw ①, then remove a pinch roller guide.

3. Pinch Roller Guide Replacement and Installation
   (1) Replace the pinch roller guide with a nwe one and install it in a tape guide 5 base ass'y with screw ①.
   (2) Apply locking compound to screw ①.

4. Cassette Compartment Ass'y Installation
   Install the cassette compartment ass'y in the reverse order of step 1.

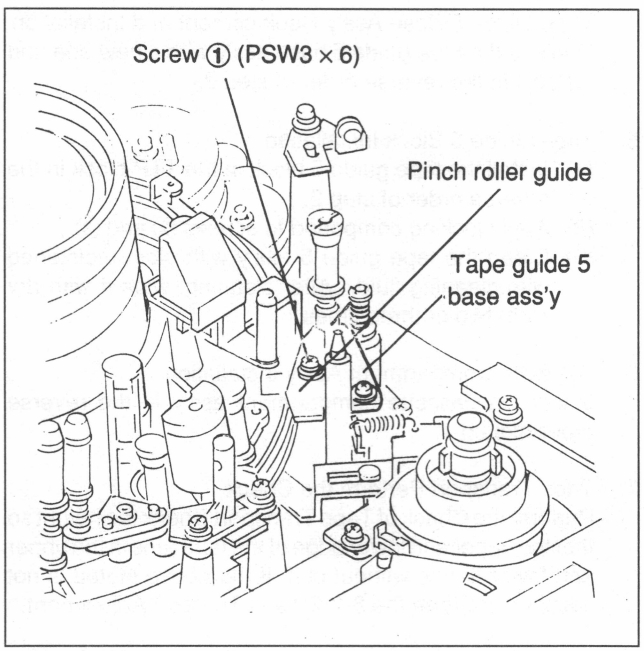

Fig.7-17-5 Pinch Roller Guide Replacement

7-18. LOADING RING BLOCK REPLACEMENT

Basic Knowledge

A. The loading ring block is composed of a pinch roller ass'y, cleaning roller ass'y, ring guide 1/2/3/4 ass'y, and loading ring ass'y.

B. The replacement procedures of a loading ring block are explained as the following sections. (Fig. 7-18-1)
- 7-18-1. Ring Guide 1/2/3/4 Ass'y Replacement
- 7-18-2. Loading Ring Ass'y Replacement

C. Each ring guide ass'y can be easily replaced or cleaned when it is moved near the loading drive gear ass'y using the manual crank of a loading drive gear ass'y.

D. If the replacement of an upper flange 2 is not required for the ring guide ass'y replacement, remove on install the upper flange 2 without loosening or removing the screw ① shown in Fig. 7-18-1.

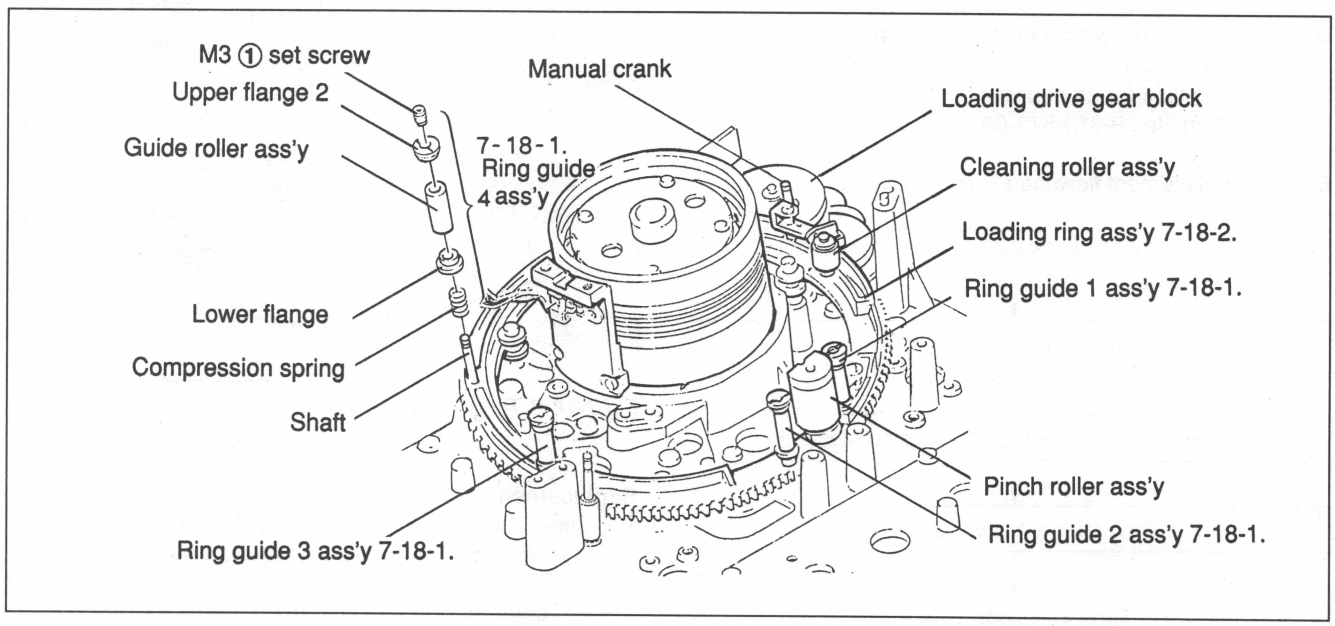

Fig.7-18-1 Loading Ring Block

E. If the replacement of the upper flange 2 is required, screw the screw ① into the upper flange so that the top surface of screw ① aligns with the lower edge of slant surface C inside the new upper flange 2, then install. (Fig. 7-18-2)

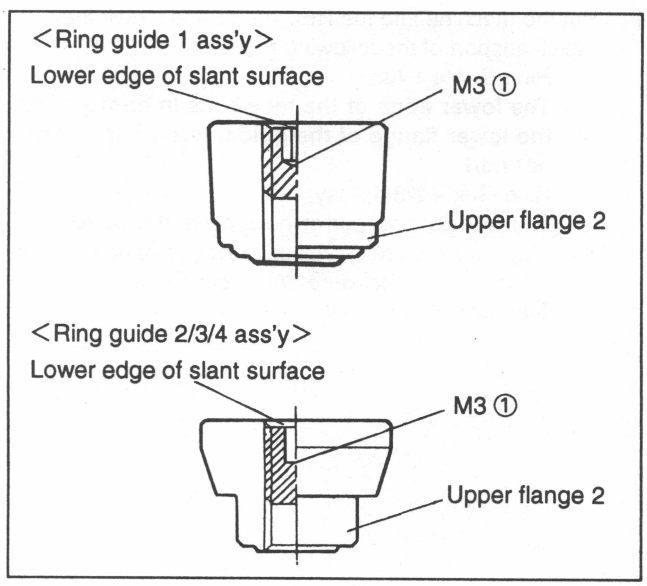

Fig.7-18-2 Install the Upper Flange 2

7-18-1. Ring Guide 1/2/3/4 Ass'y Replacement

Basic Knowledge

A. Refer to the basic Knowledge of Section 7-18 before replacement.

B. The replacement procedures of the ring guide 1/2/3/4 ass'y are same.

C. Fig. 7-18-3 shows the ring guide 3 ass'y replacement. For the ring guide 1/2/4 ass'y replacement, referring to this section.

D. Prepare the following tools for replacement:
Cloth (or gauze)
Cleaning fluid (or an equivalent)
Sony Part No.: 9-919-573-00

E. The replacement flowchart is as follows:

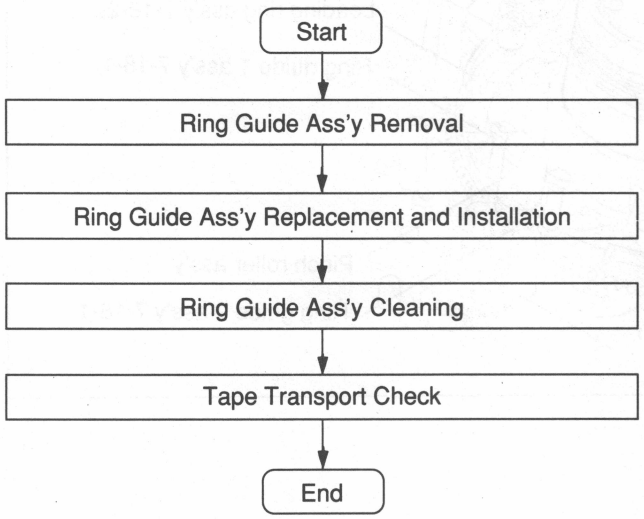

F. Put the machine into the REC mode and check the tapeTransport of the following guides.
(1) Ring Guide 1 Ass'y:
The lower edge of the tape runs in contact with the lower flange of the guide, but the tape does not curl
(2) Ring Guide 2/3/4 Assy:
The tape does not curl at the upper and lower flanges.
(3) The items above (1) (2), adjust in accordance with the adjustment procedure of Section 8-3-2. Tape Transport Adjustment

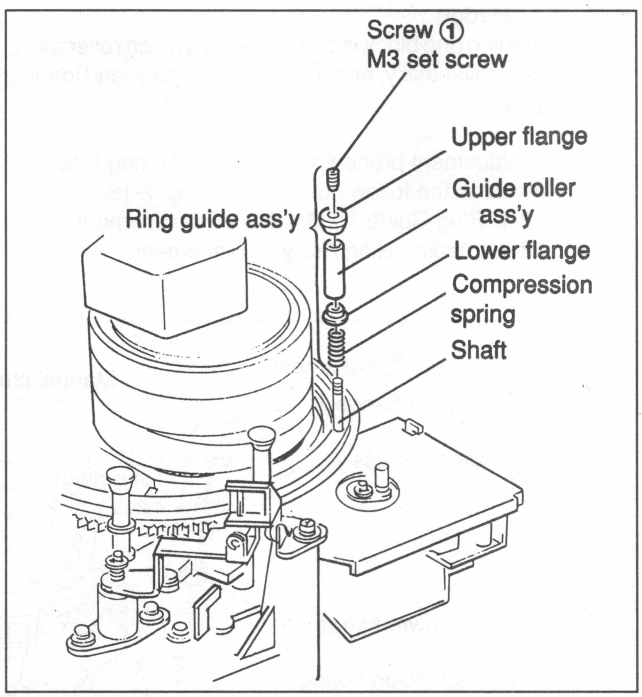

Fig.7-18-3 Ring Guide 3 Ass'y

Replacement

1. Ring Guide Ass'y Removal (Fig. 7-18-3)
(1) Loosen screw ① and remove an upper flange.
(2) Remove a guide roller ass'y, lower flange, and compression spring from a shaft.

2. Ring Guide Ass'y Replacement and Installation
(1) Replace the ring guide ass'y with a new one and install it in the reverse order of step 1.
• The guide roller ass'y has a directional characteristic.
The ball bearing set to the inner portion is placed upward. (Fig 7-10-4)
(2) Install the upper flange referring to the basic Knowledge of Section 7-18.

3. Clean the ring guide ass'y with cloth moistened with cleaning fluid.
After cleaning, wipe it with dry cloth two or three times.

4. Tape Transport Perform the Check
Specifically perform the following

7-18-2. Loading Ring Ass'y Replacement

Basic Knowledge

A. Be careful not to damage the tape running surface of a drum, the rotary head, and capstan shaft when replacing the loading ring ass'y. It is recommended that the drum ass'y covers with cloth for protection during replacement.

B. When a cassette compartment ass'y is removed, the loading ring ass'y replacement can be easily performed.

C. Before carrying out the replacement, refer to Section 7-12, Basic Knowledge, part E.

D. Prepare the following tools for replacement:
- Binding band
  Sony Part No.: 3-645-566-01
- Cloth (or gauze)
- Cleaning fluid (or an equivalent)
  Sony Part No.: 9-919-573-00

E. After loading Ring Ass'y replacement, Check the tape transport, (Refer to Section 8-3-1.) Specifically perform the following;
Put the machine into the REC mode and check the tape Transport of the following guides.
(1) Ring Guide 1 Ass'y:
The lower edge of the tape runs in contact with the lower flange of the guide, but the tape does not curl
(2) Ring Guide 2/3/4 Assy:
The tape does not curl at the upper and lower flanges.
(3) The items above (1) (2), adjust in accordance with the adjustment procedure of Section 8-3-2. Tape Transport Adjustment

F. The replacement flowchart is as follows:

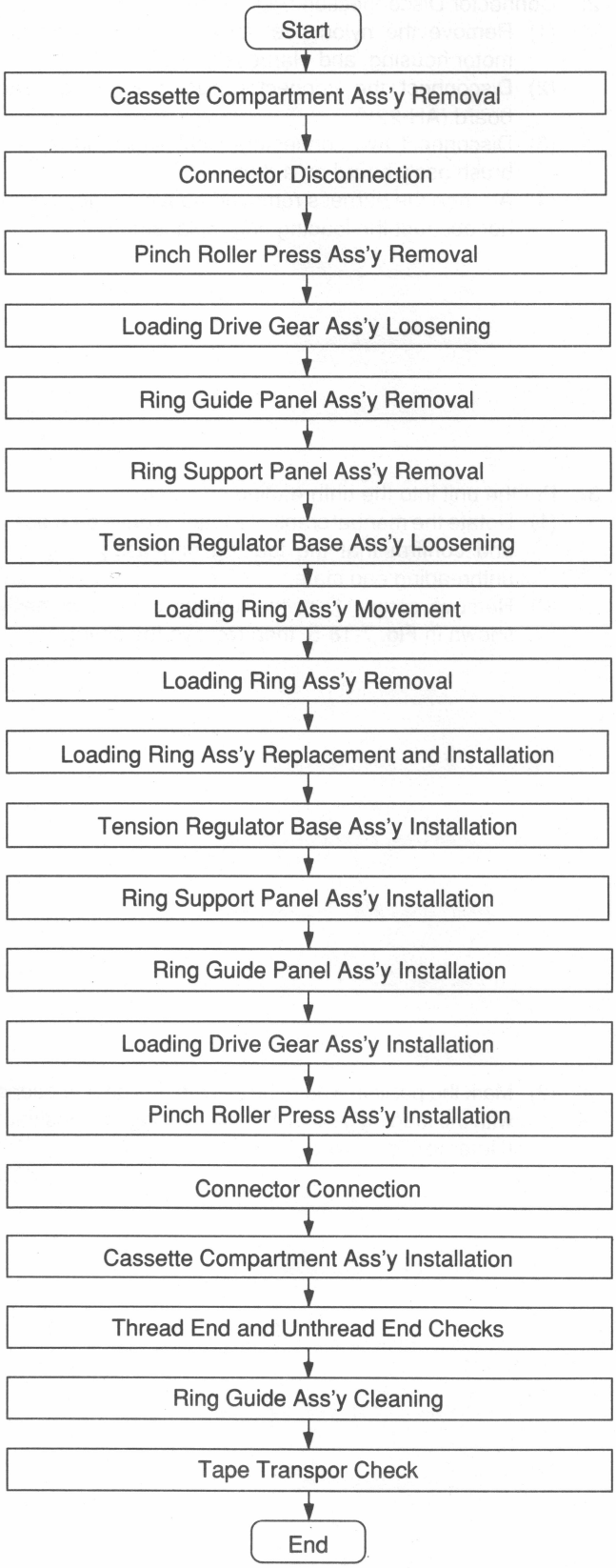

Replacement

1. Cassette Compartment Ass'y Removal
   Remove a cassette compartment ass'y referring to Section 2-7-1.

2. Connector Disconnection (Fig. 7-18-4)
   (1) Remove the nylon rivet fastening to the Capstan motor housing, and Harness guard.
   (2) Disconnect the connector from the Fixing head board (AH-22).
   (3) Disconnect two connectors CN7 and CN8 from a brush ass'y board on a drum.
   (4) Arrange the harness removed above so that it does not obstruct the loading ring replacement.

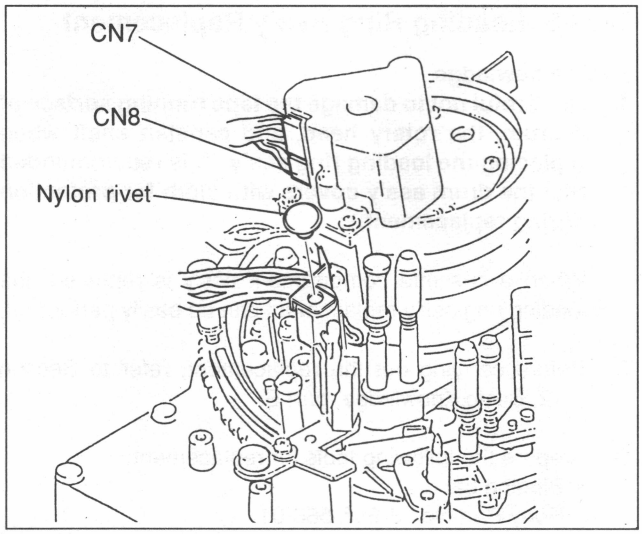

Fig.7-18-4 Connector Disconnection

3. Put the unit into the unthreading end state.
   (1) Rotate the manual crank of a loading drive gear ass'y and confirm that the loading ring ass'y is in the unthreading end state.
   (2) Remove screw ① of the loading drive gear ass'y shown in Fig. 7-18-5, then remove the cover.

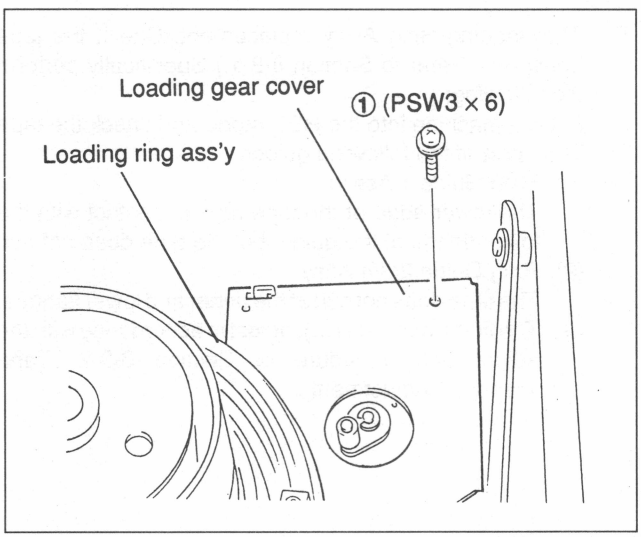

Fig.7-18-5 The Loading Drive Gear Cover Remove

   (3) Mark the position where the loading ring gear engages with the loading gear in the unthreading end position. (Refer to Fig. 7-18-6.)

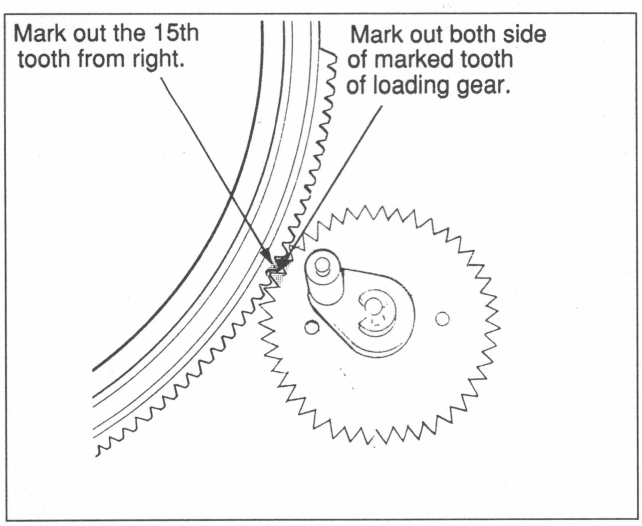

Fig.7-18-6 Mark the Loading Gear

4. Pinch Roller Press Ass'y Removal (Fig. 7-18-7)
   (1) Cut the binding band fixed on PD-35 board using nippers and remove the harness.
   (2) Remove two of screw ② shown in the figure, then remove a pinch roller press ass'y.

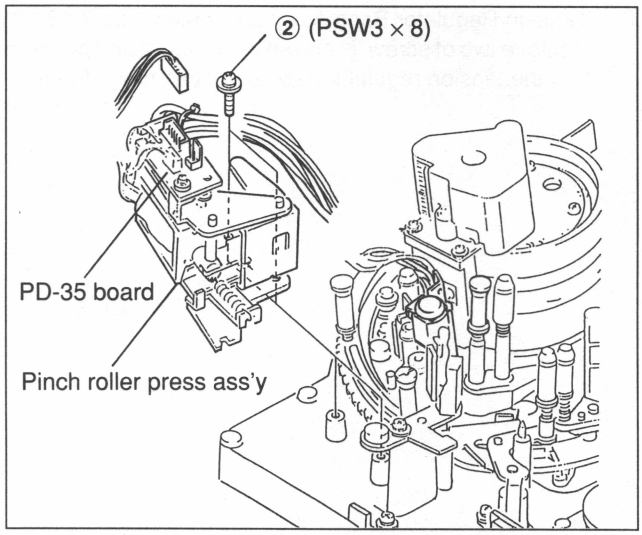

Fig.7-18-7 Pinch Roller Press Ass'y Removal

5. Loading Drive Gear Ass'y Loosening (Fig. 7-18-8)
   Loosen two of screw ③ shown in the figure and remove the engagement with a loading ring gear.

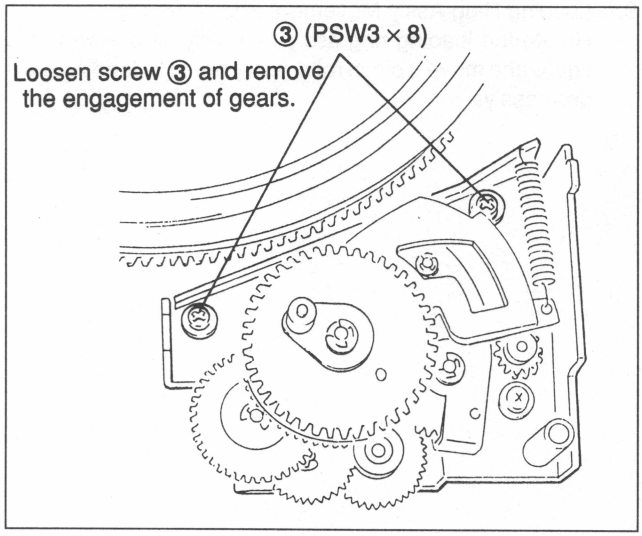

Fig.7-18-8 Loading Drive Gear Ass'y Loosening

6. Ring Guide Panel Ass'y Removal (Fig. 7-18-9)
   Remove screw ④ shown in the figure, then remove a ring guide panel ass'y.

7. Ring Support Panel Ass'y Removal (Fig. 7-18-9)
   Remove screw ⑤ shown in the figure, then remove a ring support panel ass'y.

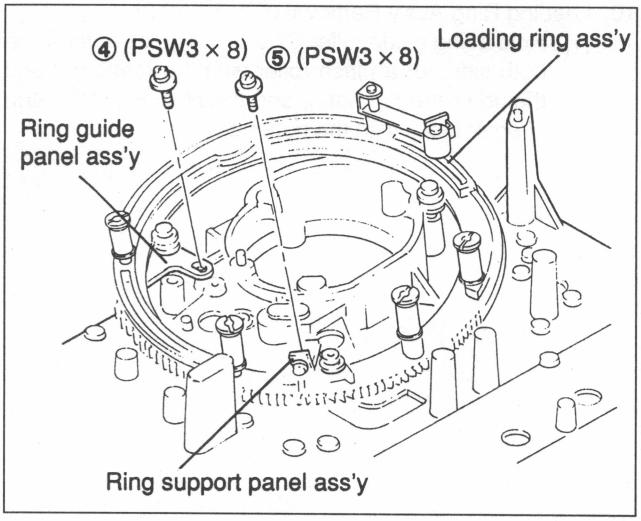

Fig.7-18-9 Ring Support Panel Ass'y and Ring Guide Panel Ass'y Removal

8. Tension Regulator Base Ass'y Loosening (Fig. 7-18-10)
Remove two of screw ⑥ shown in the figure and place so that the tension regulator base ass'y can move freely.

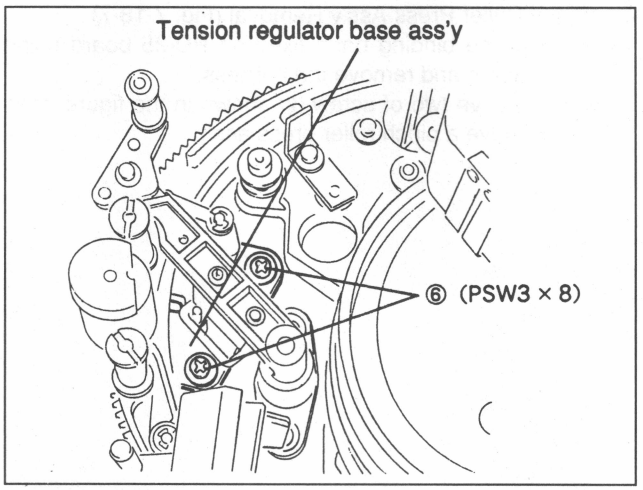

Fig.7-18-10 Tension Regulator Base Ass'y Loosening

9. Loading Ring Ass'y Movement (Fig. 7-18-11)
Rotate the loading ring ass'y manually as shown in the figure and move a pinch roller ass'y near the loading drive gear ass'y.

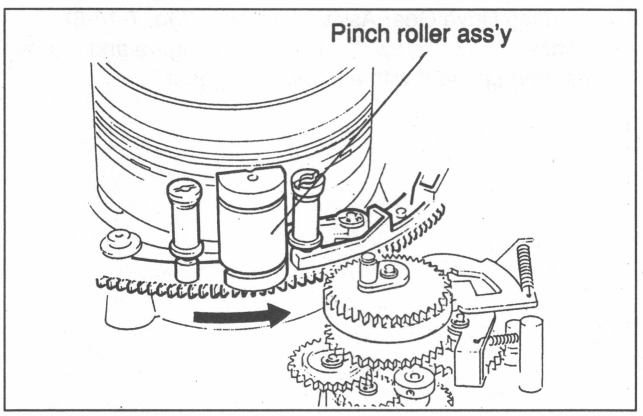

Fig.7-18-11 Loading Ring Ass'y Movement

10. Loading Ring Ass'y Removal (Fig. 7-18-12)
(1) Hold a ring guide roller ② and ring guide roller ① on both sides of a pinch roller with the forefinger and thumb of the left hand, and the cleaning roller arm support block with the right hand.

(2) Push the T cam gear in the direction indicated by arrow A with the middle finger and ring finger of the left hand while raising a cleaning roller arm upward, pull the entire loading ring ass'y in the direction indicated by arrow B, and remove it from ring guide ass'y (A).

(3) Keep the left hand apart from the ring guide roller with the cleaning roller arm in the right hand. Move a S cam arm ass'y and tension regulator ass'y with the left hand, disengage each ring support roller from the loading ring, and remove the loading ring ass'y from ring guide ass'y (B).

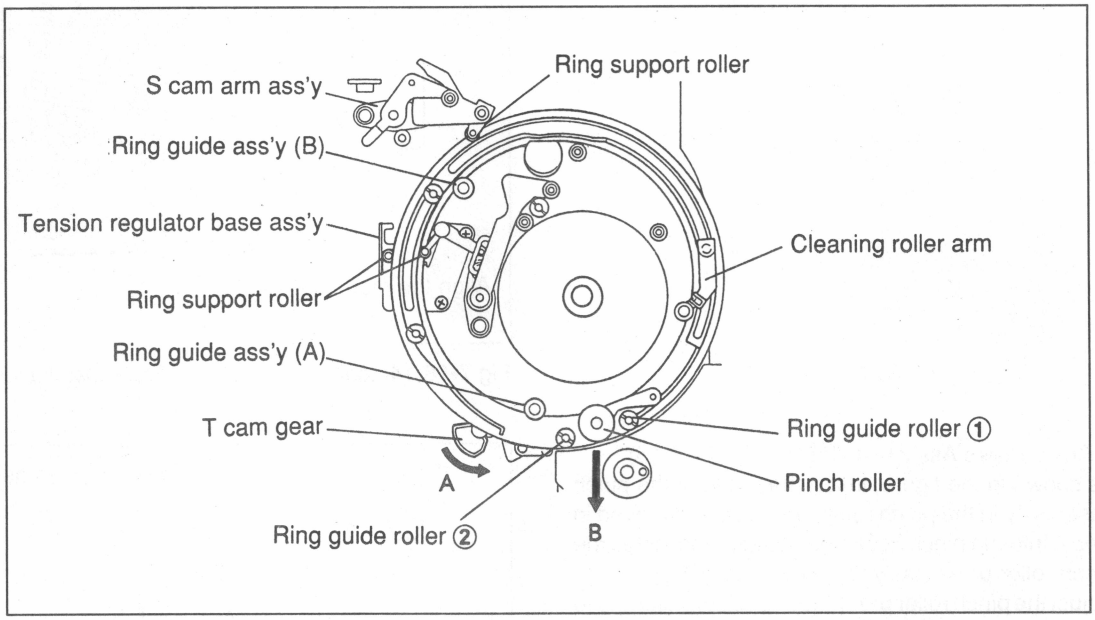

Fig.7-18-12 Loading Ring Ass'y Removal

11. Loading Ring Ass'y Replacement and Installation (Fig. 7-18-13)
    (1) Replace the loading ring ass'y with a new one and mark the ring gear of the new loading ring ass'y at the same position (fifteenth tooth) as on the old loading ring ass'y.
    (2) Install the loading ring ass'y sequentially from ring guide ass'y (B) in the reverse order of step 10, then install. (Refer to Fig. 5-18-12.)

12. Put the unthread end state.
    Move the loading ring ass'y manually to the unthread end position.

13. Tension Regulator Base Ass'y Installation
    Tighten two screws ⑥ removed previously and install the tension regulator base ass'y. (Refer to Fig. 7-18-10.)

14. Ring Support Panel Ass'y Installation
    Align the positioning boss of a ring support panel with the guide hole of a TTP base, fix it with screw ⑤, and fix the ring support panel.

15. Ring Guide Panel Ass'y Installation
    Insert the shaft of a ring guide panel ass'y and the positioning boss firmly into the guide hole of a TTP base and fix the ring guide panel ass'y with screw ④.

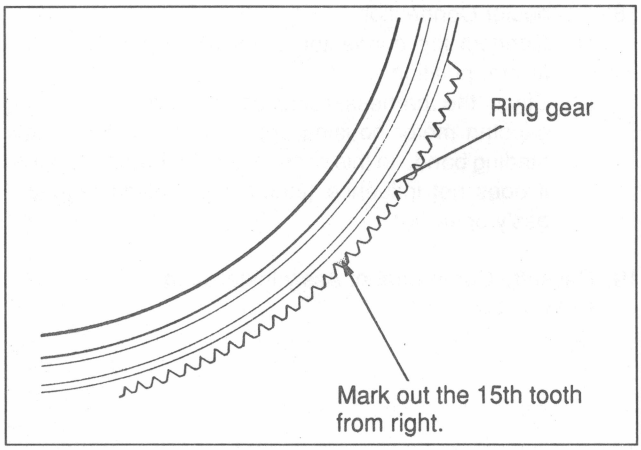

Fig.7-18-13 Mark the Loading Ring Gear

16. Loading Drive Gear Ass'y Installation
    (1) Confirm that the ring is in the unthread end position and align the mark of a loading drive gear ass'y with the previously marked tooth of a ring gear. (Refer to Fig. 7-18-14.)
    (2) Tighten screw ③ and install the loading drive gear ass'y.
    (3) Install the loading gear cover with screw ①. (Refer to Fig. 7-18-5.)

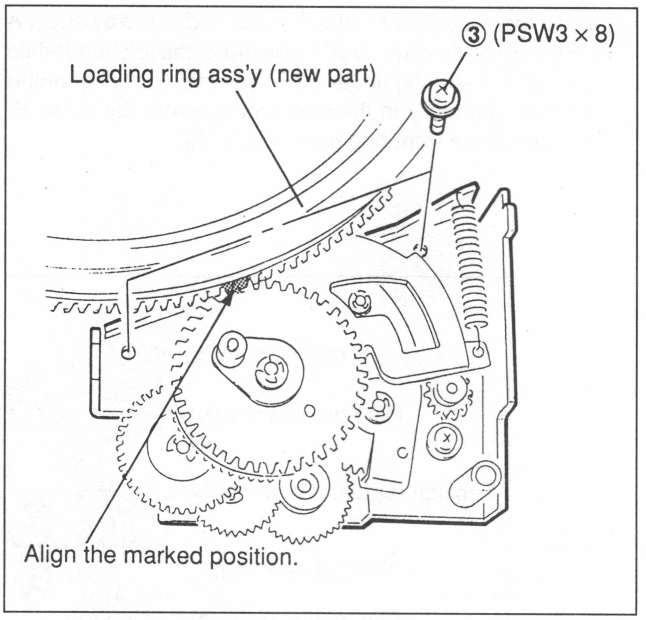

Fig.7-18-14 Loading Drive Gear Ass'y Installation

17. Pinch Roller Press Ass'y Installation (Fig. 7-18-15)
    (1) As shown in the figure, insert the notch of the pinch base ass'y in the pinch roller press ass'y removed in step 4 into the pinch adjustment panel and install the pinch roller press ass'y with two of screw ②.
    (2) Adjust the pinch roller press block position referring to Section 7-6-3.
    (3) Bind the harness removed in step 4 to the board using a new binding band.

18. Connector Connection
    (1) Connect the connectors removed in step 2 to the former position.
    (2) Binds the harness removed in step 2-(1) to the capstan motor housing upper portion using a new binding band. In this case, binds the harness so that it does not influence (touch) the tension regulator ass'y operation.

19. Cassette Compartment Ass'y Installation
    Refer to Section 2-7-1.

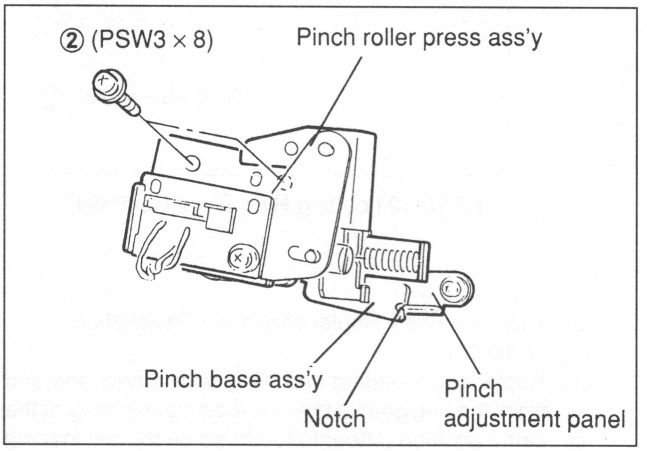

Fig.7-18-15 Pinch Roller Press Ass'y Installation

20. Threading End/Unthreading End Position Adjustment

Basic knowledge

This adjustment is made without inserting a cassette.

(1) Press the keys [SET UP] , [C] , [−] , and [SET] in the 21-key section of the control panel to select test mode.

(2) Press the keys [1] , [7] , [SET] , and [+] to select TTP ADJ, and then press the key [SET] . The control panel displays the following message.

T * R XX:XX:XX:XX	TEST MOD
TTP ADJ	○○○○ ○○○○ ○○○○

(3) Press the keys [C] , [0] , [SET] , [C] , [1] , [6] , and [SET] in this order. This operation automatically starts the threading end and unthreading end positions of the loading ring.
The control panel displays the following message.

XXXX
THREAD ADJUST

(4) When the word END appears on the control panel, operate the following keys to write the automatic adjustment value into the NOVRAM.
[C] , [9] , [9] , [SET]
The control panel displays the following message.

XXXX
DATA SAVE OK?

With the key [F] pressed, press the white key [IN] When the key [SET] is pressed, the control panel displays the following message.

XXXX
DATA SAVED

NOTE: To suspend data write, press the key [SET] when the message DATA SAVE OK? appears on the control panel, which then displays the following message.

XXXX
ABORTED

Data write is suspended. Do not switch power off or operate keys during data write. Otherwise, adjustment data will be destroyed.

(5) Switch power OFF/ON to return to normal mode.

21. Ring Guide Ass'y Cleaning
Clean four pairs of ring guide assemblies with cloth moistened with cleaning fluid.
After cleaning, wipe it with dry cloth two or three times.

22. Tape Transport Perform the Check
Refer to Basic Knowledge D of the section 7-18-2.

7-19. LOADING DRIVE GEAR BLOCK REPLACEMENT

Basic Knowledge

A. The replacement procedures of a loading drive gear block are explained as the following sections. (Fig. 7-19-1)
   7-19-1. Loading Drive Gear Ass'y Replacement
   7-19-2. Potentiometer Gear Ass'y Replacement
   7-19-3. Loading Motor Replacement

B. The loading drive gear block is replaced by raising a TTP block. The cassette compartment ass'y is therefore removed before replacement.

C. The thread end and unthread end position adjustments should be performed when removing the loading drive gear block.

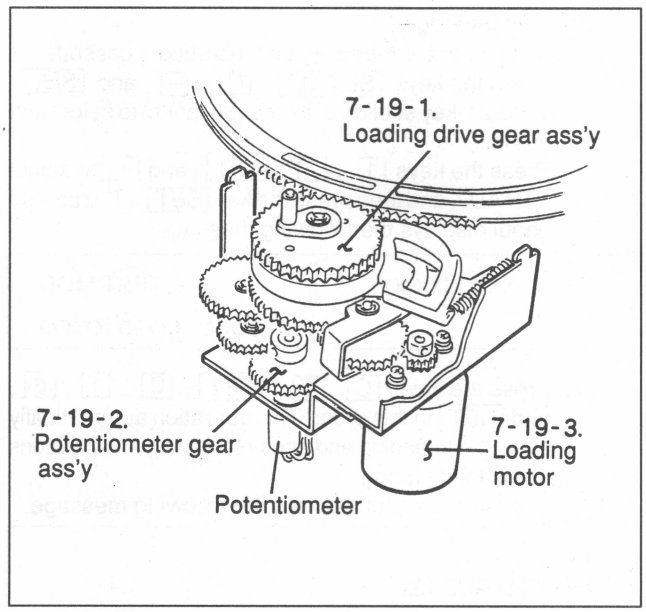

Fig.7-19-1 Loading Drive Gear Block Replacement

7-19-1. Loading Drive Gear Ass'y Replacement

Basic Knowledge

A. Refer to the basic Knowledge of Section 7-19 before replacement.

B. Prepare the following tool for replacements and adjustments:
- Tester

C. The replacement flowchart is as follows:

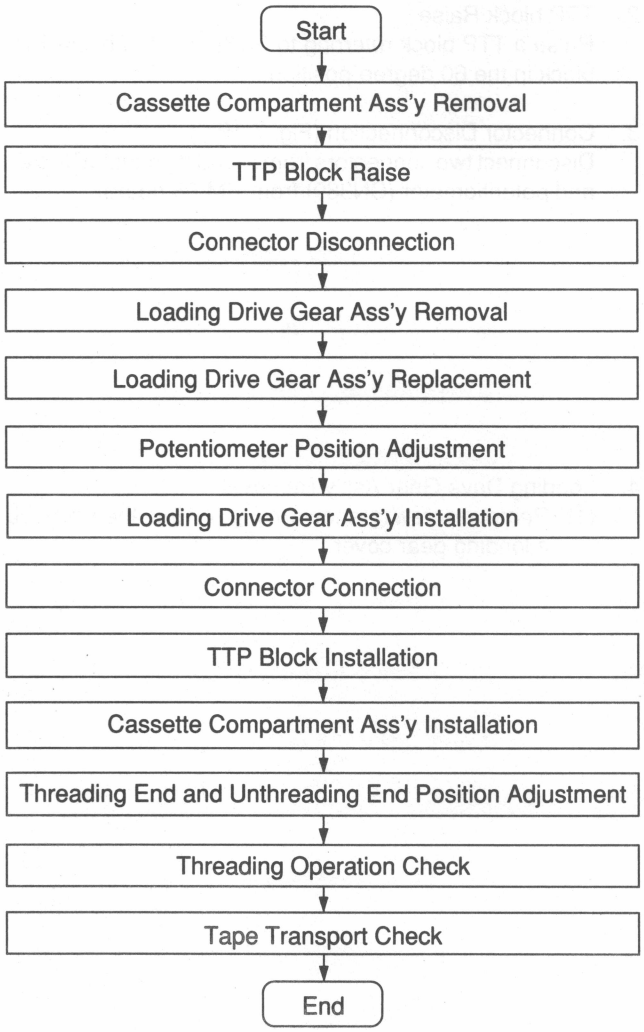

Replacement

1. Cassette Compartment Ass'y Removal
   Remove a cassette compartment ass'y referring to Section 2-7-1.

2. TTP block Raise
   Raise a TTP block referring to Section 2-8. Fix the TTP block in the 60 degree-position.

3. Connector Disconnection (Fig. 7-19-2)
   Disconnect two connectors from a loading motor (CN385) and potentiometer (CN389) from RM-68 board.

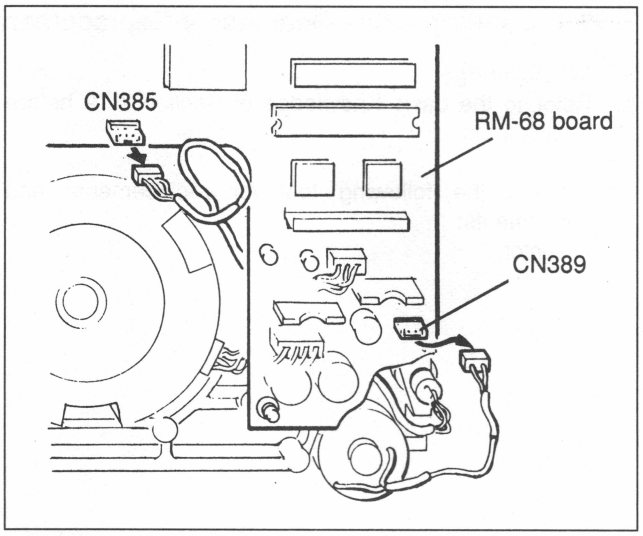

Fig.7-19-2 Connector Disconnection

4. Loading Drive Gear Ass'y Removal
   (1) Remove screw ① shown in Fig. 7-19-3, then remove a loading gear cover.

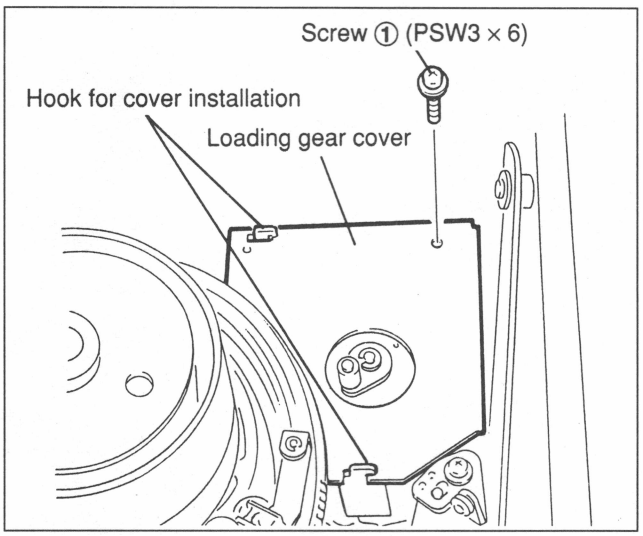

Fig.7-19-3 Loading Gear Cover Remove

   (2) Remove two of screw ② shown in Fig. 7-19-4, then remove the loading drive gear ass'y.

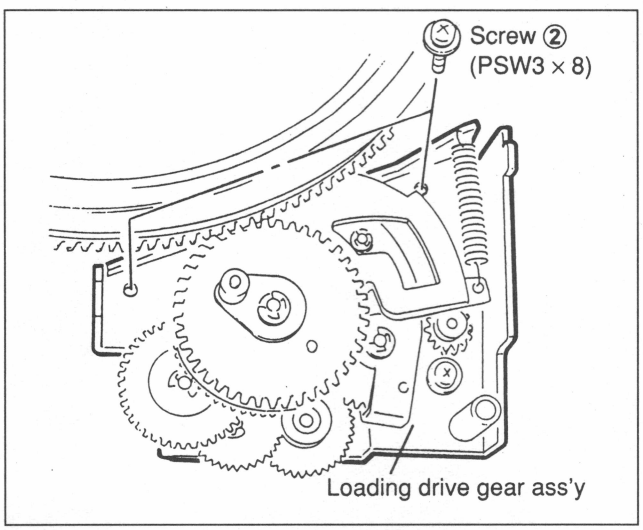

Fig.7-19-4 Loading Drive Gear Ass'y Remove

5. Loading Drive Gear Ass'y Replacement
   (1) Put a loading ring ass'y into the unthread end position by rotating the manual crunk.
   (2) Replace the loading drive gear ass'y with a new one and fix it on the TTP block with two screws ② snugly, but do not tighten. (Fig. 7-19-5)
   (3) Place the gear of the installed loading drive gear ass'y and the loading ring gear so that they do not engage with each other. (Fig. 7-19-5)

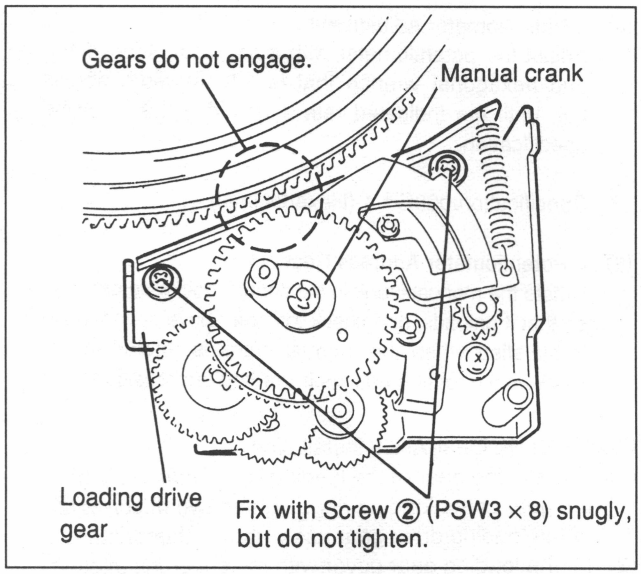

Fig.7-19-5 Loading Drive Gear Ass'y Installation

6. Potentiometer Position Adjustment

SV-116 Board (ICA9) Software version 1-0-0 to 1-2-2

As shown in Fig. 7-19-6. rotate the gear using a manual crunk so that the resistance value between the red and white leads at the potentiometer is 200 to 300 ohms, then adjust using a tester.

SV-116 Board (ICA9) Software version 1-2-4 and later

(1) < Potentiometer Address Check >
Rotate the manual crank of the loading gear ass'y in the clockwise direction until its threading end position. (Until the manual crank cannot be rotated any further.) Check that the indicated rate 1 is within the following specification.

Specification : 000E ± 1 (Hexadecimal)

If it does not, perform (2) and onwards. If it does, perform section 7-18-2, step 20. Threading End/Unthreading End Position Adjustment.

(2) < Potentiometer Stopper Screw Direction Check and Adjustment >
Check that the stopper screw (with hexagonal hole and 3×3 flat nylon lock) of the potentiometer can be rotated with the hexagonal wrench at the threading end position (Fig. 1).

(3) < Potentiometer Stopper Screw Direction Adjustment >
   (3)-1. If it cannot be rotated, rotate the manual crank to move the loading ring ass'y until its threading end position.
   (3)-2. Loosen the two screws (PSW3×8) which secure the loading drive gear ass'y to the TTP block so that the loading drive gear ass'y and loading ring gear do not engage. In this condition, rotate the manual crank until the stopper screw faces the right as shown in Fig. 1.
   (3)-3. Engage the gears again and tighten the two screws (PSW3×8).
   (3)-4. Rotate the manual crank again and set the loading ring to its threading end position. (Until the manual crank cannot be rotated any further.) Check that the stopper screw of the potentiometer faces the direction shown in Fig. 1.

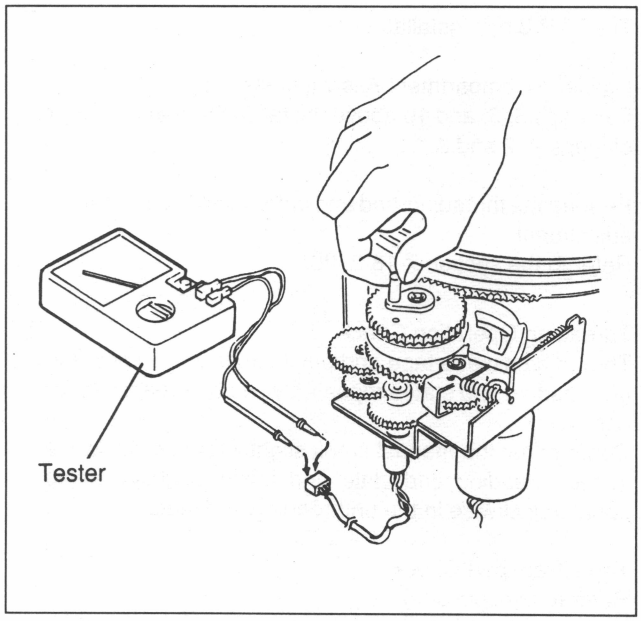

Fig.7-19-6 Potentiometer Position Adjustment

(4) < Potentiometer Adjustment >
Adjust the potentiometer with a flat-blade screwdriver and hexagonal wrench that is 1.5mm width across flat, until the indicated rate 1 is within the following specification.

Specification:000E ± 1 (Hexadecimal)

(5) < Potentiometer Address Recheck >
Rotate the manual crank in the counterclockwise direction so that it unloads, and check that the above specification is satisfied when the manual crank is rotated in the clockwise direction until its threading end position.

7. Loading drive Gear Ass'y Installation
   (1) Engage the gear of the loading drive gear ass'y and the gear of the loading ring. Tighten two of screw ② of the loading drive gear ass'y above, then install.
   (2) Fit the loading gear cover with the cover installation hooks (refer to Fig. 7-19-3) of the loading drive gear ass'y and insert the cover. Then, install it with screw ①.

8. Connectors Connetion

9. The TTP Block Installation

10. Cassette Compartment Ass'y Installation
    For steps 8, 9, and 10 above, install in the reverse order of steps 1, 2 and 3.

11. Perform the threading-end and unthreading- end position adjustment.
    Refer to the section 7-18-2, 20.

12. Threading Operation Check
    Thread a cassette tape and put it into the threading and unthreading end states repeatedly two or three times for check.
    Confirm that the manual crank slightly rotates clockwise in the threading end state and that it slightly rotates counterclockwise in the unthreading end state.

13. Tape Transport Check
    Refer to the section 8-3-1.

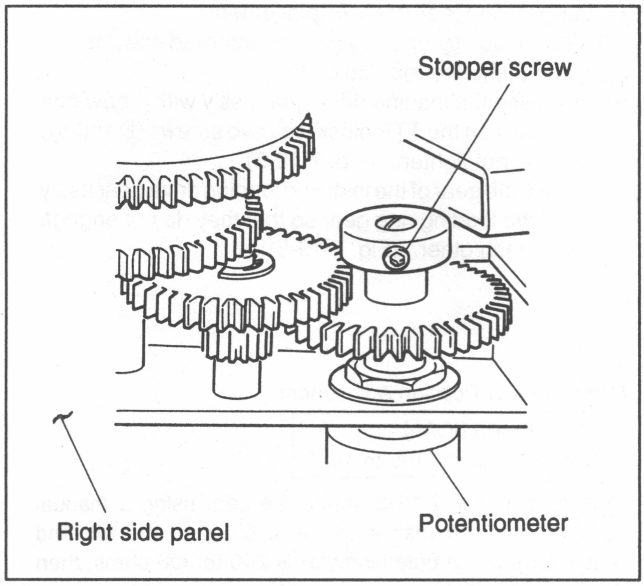

Fig. 1. Direction of Potentiometer

7-19-2. Potentiometer Gear Ass'y Replacement.

Basic Knowledge

A. Refer to the basic Knowledge of Section 7-19 before replacement.

B. Replace the potentiometer gear ass'y when the tooth of the potentiometer gear ass'y is partially broken for some reason, a play occurs in the gear engagement, or a fault is generated in the potentiometer.

C. The potentiometer gear ass'y is assembled in a loading drive gear ass'y. The replacement procedures are the same as in Section 7-19-1, "Loading Drive Gear Ass'y Replacement".

D. Prepare the following tool for replacement and adjustment:
- Tester

E. The replacement flowchart is as follows:

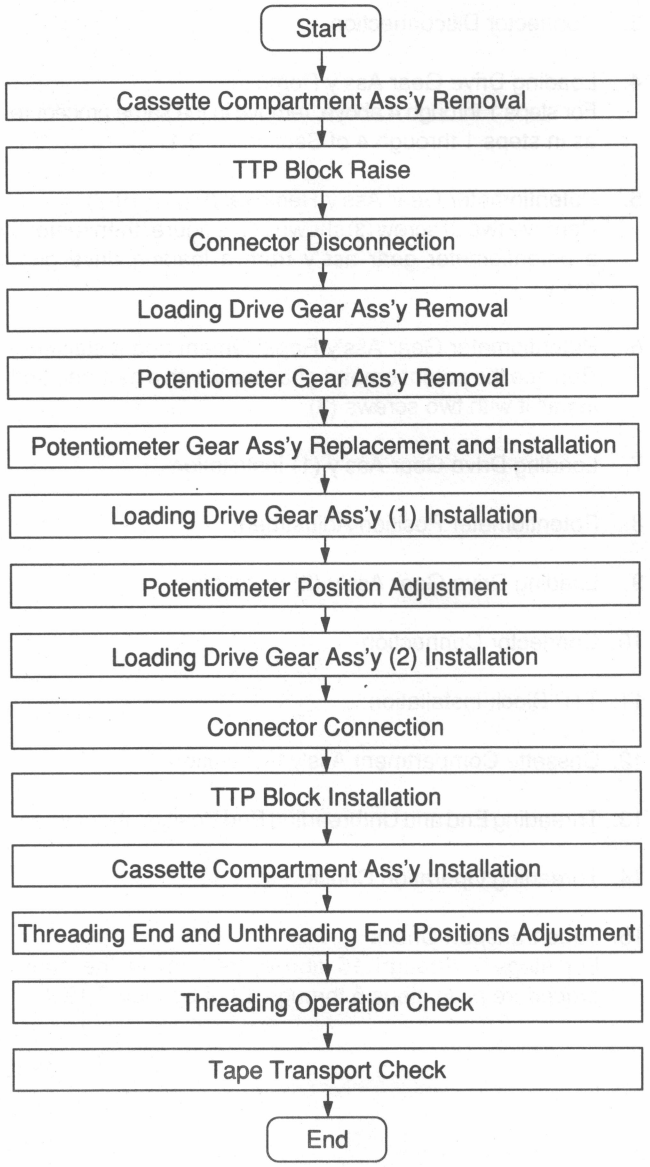

Replacement

1. Cassette Compartment Ass'y Removal
2. TTP Block Raise
3. Connector Disconnection
4. Loading Drive Gear Ass'y Removal
   For steps 1 through 4 above, remove in the same procedure as in steps 1 through 4 of Section 7-19-1.
5. Potentiometer Gear Ass'y Removal (Fig. 7-19-7)
   Remove two of screw ③ shown in the figure, then remove a potentiometer gear ass'y from a loading drive gear ass'y.
6. Potentiometer Gear Ass'y Replacement and Installation
   Replace the potentiometer gear ass'y with a new one and install it with two screws (3).
7. Loading Drive Gear Ass'y (1) Installation
8. Potentiometer Position Adjustment
9. Loading Drive Gear Ass'y (2) Installation
10. Connector Connection
11. TTP Block Installation
12. Cassette Compartment Ass'y Installation
13. Threading End and Unthreading End Position Adjustment
14. Threading Operation Check
15. Tape transport Check
    For steps 7 through 15 above, perform in the same procedure as in steps 5 through 13 of Section 7-19-1.

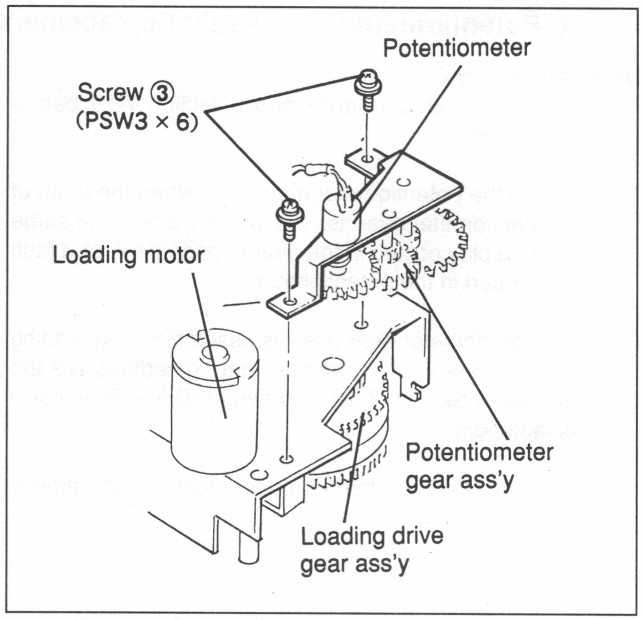

Fig.7-19-7 Potentiometer Gear Ass'y Replacement

7-19-3. Loading Motor Replacement

Basic Knowledge

A. Refer to the basic Knowledge of Section 7-19 before replacement.

B. The loading motor is a component that must be replaced periodically. Replace the loading motor per 6000 hours.

C. The replacement procedures are the same as in Section 7-19-1,
"Loading Drive Gear Ass'y Replacement".

D. The replacement flowchart replacement is as follows:

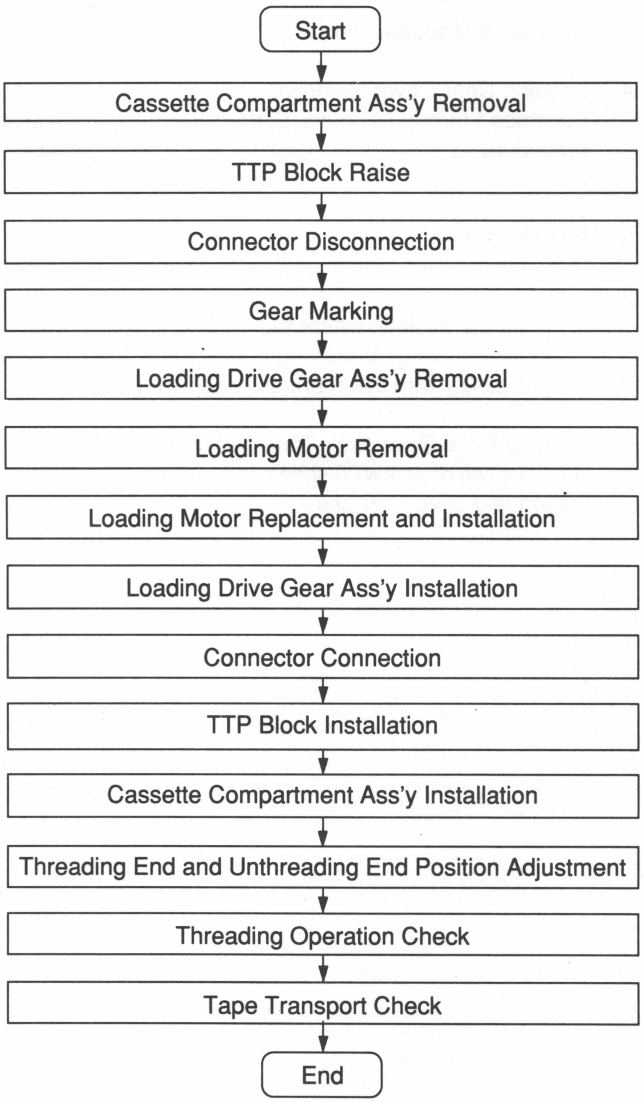

Replacement

1. Cassette Compartment Ass'y Removal

2. TTP Block Raise

3. Connector Disconnection

4. Loading Gear Cover Removal
   For steps 1 through 4 above, perform the steps in the same procedure as in steps 1 through 3 and 4 (1) of Section 7-19-1.

5. Gear Marking
   (1) Confirm that a loading ring ass'y is in the unthreading end position.
   (2) Mark the position where the loading ring gear and loading drive gear engages. (Install the loading drive gear ass'y with this mark as reference.)

6. Loading Drive Gear Ass'y Removal (Fig. 7-19-9)
   Remove two of screw ② shown in the figure, then remove the loading drive gear ass'y.

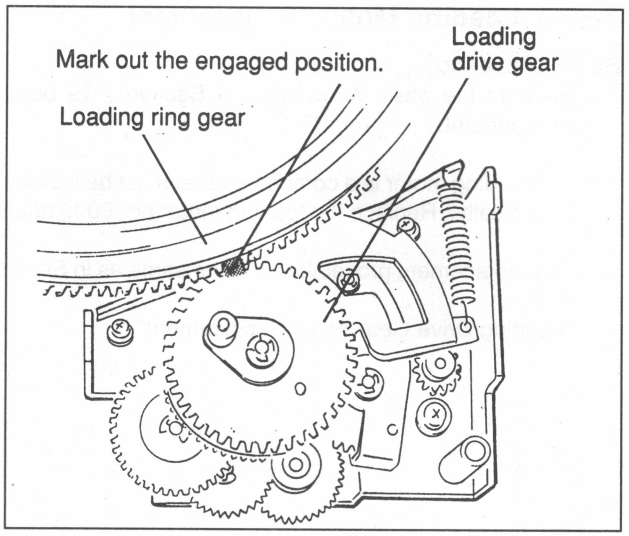

Fig.7-19-8 Gear Marking

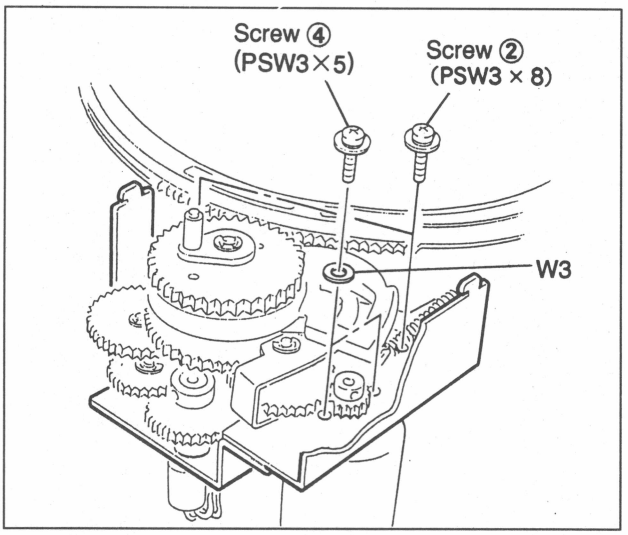

Fig.7-19-9 Loading Drive Gear Ass'y Romove

7. Loading Motor Removal
   (1) Remove screw ⑤ shown in Fig. 7-19-10, then remove a loading motor gear from the motor shaft.
   (2) Remove two of screws ④ and washers shown in Fig. 7-19-9, then remove a loading motor from the loading drive gear ass'y.

   Note: The washers are attached if the ROM (ICA9) on the SV-116 board is version 1-2-4 and later.

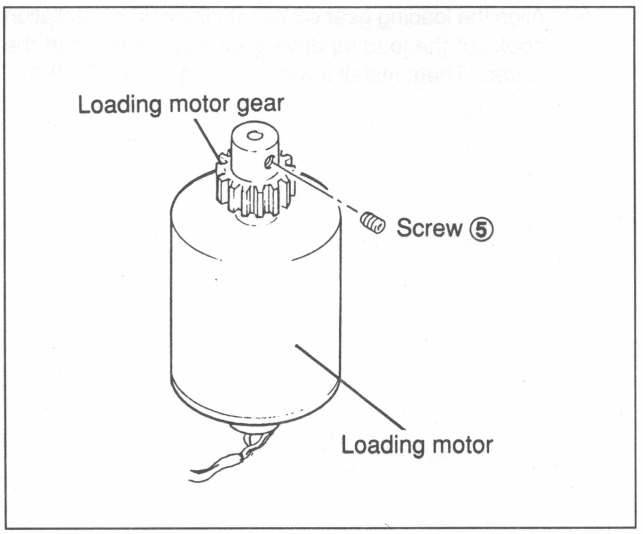

FIg.7-19-10 Loading Motor Removal

8. Loading Motor Replacement and Installation
   (1) Replace the loading motor with a new one. Install the loading motor on the loading drive gear ass'y with two of screw ④ and washers shown in Fig. 7-19-12.
   (2) As shown in Fig. 7-19-11, attach the loading motor gear removed in step 7-(2) to the end surface of the motor shaft with screw ⑤ so that the projection measured from the top of the loading motor gear satisfies the specification (1.0 ± 0.2 mm).

   Note: Check that the ROM (ICA9) on the SV-116 board is version 1-2-4 and later.

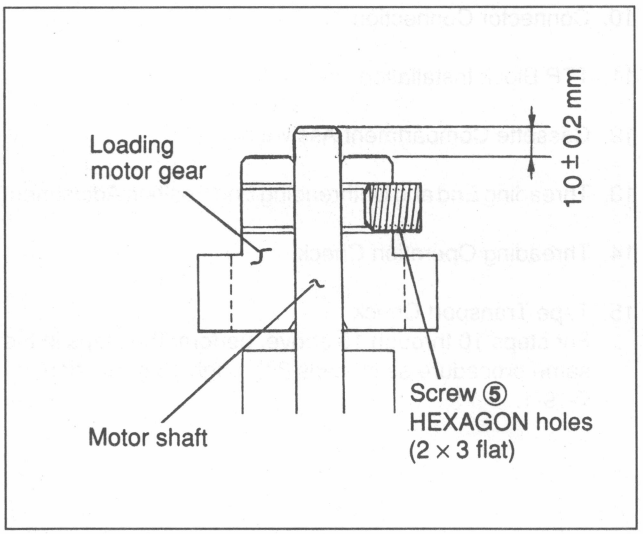

Fig.7-19-11 Loading Motor Gear Installation

9. Loading Drive Gear Ass'y Installation
   (1) Align the marks of the gears marked in step 5 and install the loading drive gear ass'y on the TTP block with two of screw ②.

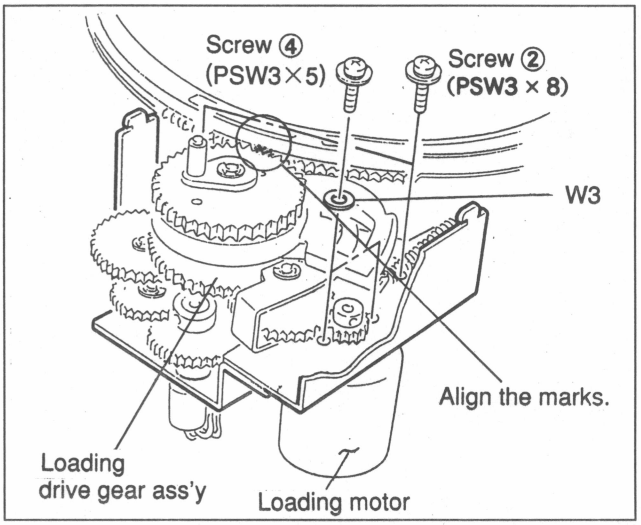

Fig.7-19-12 Loading Drive Gear Ass'y Installation

(2) Align the loading gear cover with the cover installation hooks of the loading drive gear ass'y and insert the cover. Then, install it with screw ①. (Fig. 7-19-3)

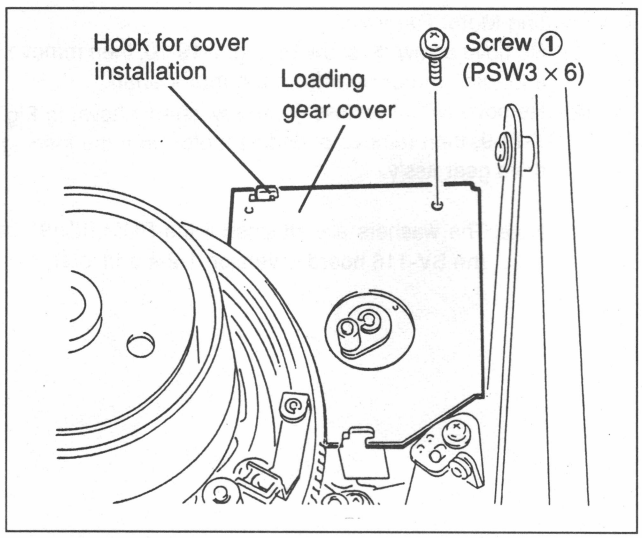

Fig.7-19-13 Loading Gear Cover Installation

10. Connector Connection
11. TTP Block Installation
12. Cassette Compartment Ass'y Installation
13. Threading End and Unthreading End Position Adjustment
14. Threading Operation Check
15. Tape Transport Check
    For steps 10 through 15 above, perform the steps in the same procedure as in steps 8 through 13 of Section 7-19-1.

7-20. PINCH ROLLER PRESS ASS'Y REPLACEMENT

Basic Knowledge

A. The pinch roller press ass'y is a component that must be replaced periodically. Replace the pinch roller press ass'y per 5000 hours.

B. The replacement flowchart is as follows:

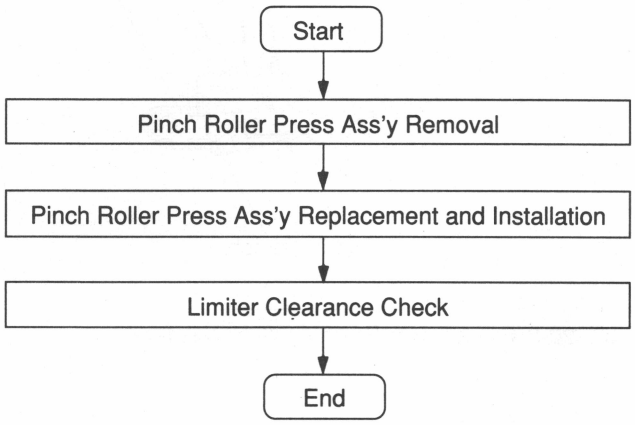

C. Prepare the following tool for replacements:
Binding band
Sony Part No: 3-645-566-01

Replacement

1. Pinch Roller Press Ass'y Removal (Fig. 7-20-1)
   (1) Disconnect connector CN854 from PD-35 board.
   (2) Cut the binding band fixed on PD-35 board using nippers and remove the harness.
   (3) Remove two of screw ① shown in the figure, then remove a pinch roller press ass'y.

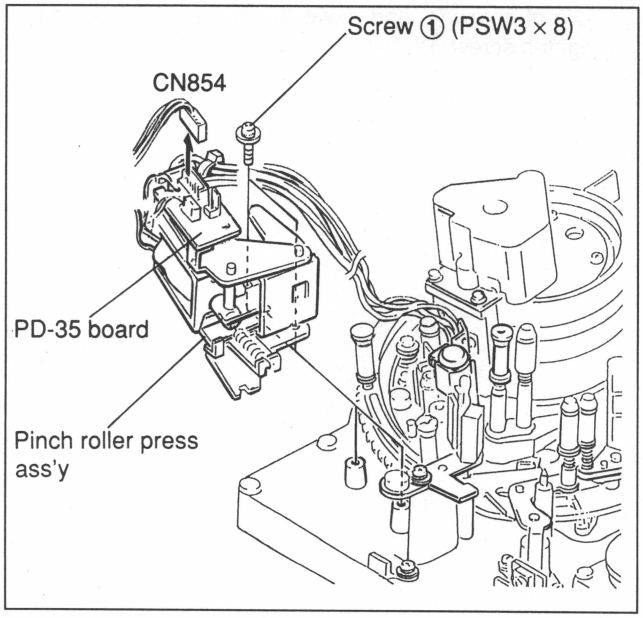

Fig.7-20-1 Pinch Roller Press Ass'y Removal

2. Pinch Roller Press Ass'y Replacement and Installation (Fig. 7-20-2)
   (1) Replace the pinch roller press ass'y with a new one, insert the notch of the pinch base ass'y shown in the figure into the pinch adjustment panel, then install it with two of screw ①.
   (2) Connect the previously disconnected connector into the board, then install.
   (3) Binds the harness removed in step 1 to the board using a new binding band.

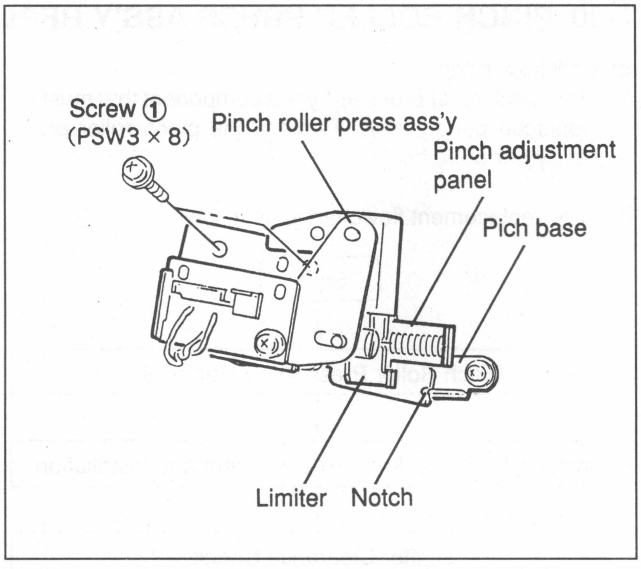

Fig.7-20-2 Pinch Roller Press Ass'y Installation

3. Limiter Clearance Check and Adjustment (Fig. 7-20-3)
   Put the loading ring into the threading end position and check the limiter clearance.
   Adjust the limiter clearance referring to step 3 of Section 7-6.
   If the specification (0.6 ± 0.1 mm) is not satisfied, loosen two of screw ① and move the limiter. If it is satisfied, tighten screw ①.

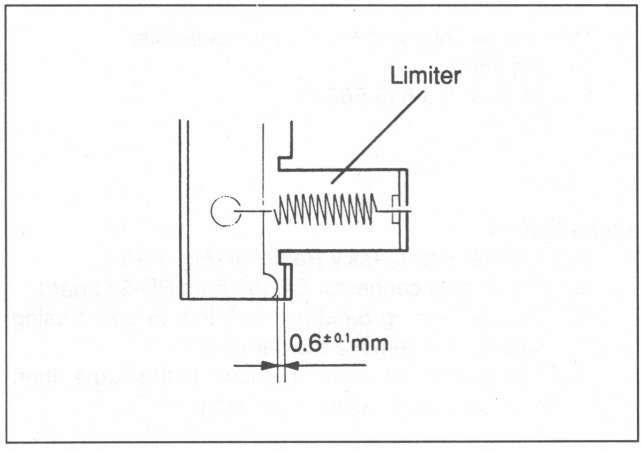

Fig.7-20-3 Limiter Clearance Check

7-21. CAPSTAN MOTOR REPLACEMENT

Basic Knowledge

A. The capstan motor shaft has an important part of this unit. Be careful not to damage it.

B. The capstan motor is a component that must be replaced periodically. Replace the capstan motor per 3000 hours.

C. When the Capstan motor is replaced, carry out Tape Speed Adjustment and Capstan FG Adjustment.

D. Before carrying out the replacement, refer to Section 7-12, Basic Knowledge, part E.

E. Prepare the following tools for replacements and adjustments:
- Cloth (or gauze)
- Cleaning fluid (or an equivalent)
  Sony Part No: 9-919-573-00
- Oscilloscope

F. The replacement flowchart is as follows:

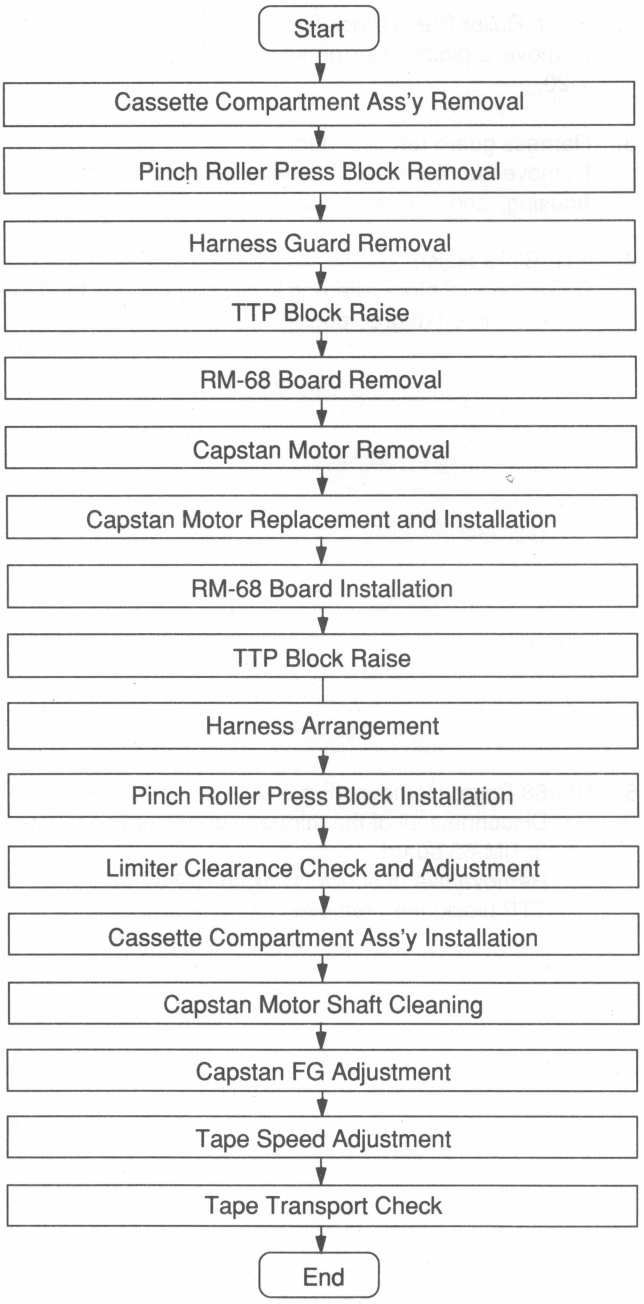

Replacement

1. Cassette Compartment Ass'y Removal
   Remove a cassette compartment ass'y referring to Section 2-7-1.

2. Pinch Roller Press Block Removal
   Remove a pinch roller press block referring to Section 7-20.

3. Harness guard removal (Fig. 7-21-1)
   Remove the nylon rivet fastening to the Capstan motor housing, and Harness guard.

4. TTP Block Raise
   Raise the TTP block referring to Section 2-8. Fix the TTP block in the 60 degree-position.

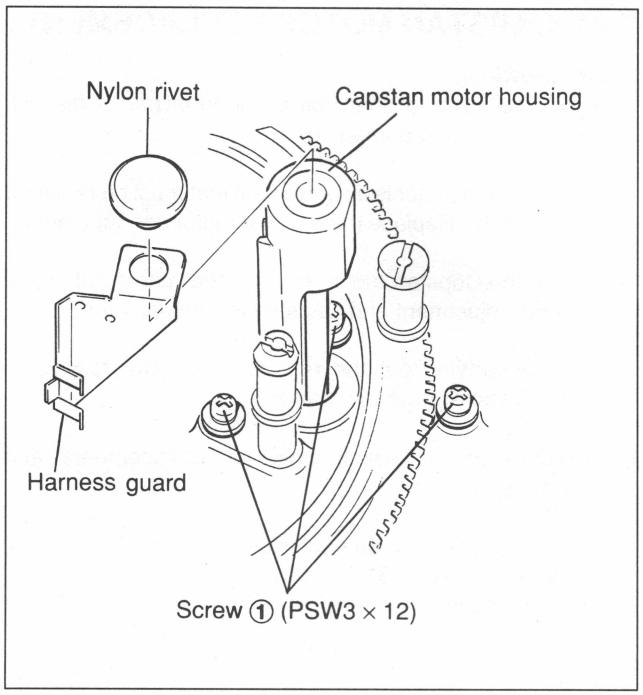

Fig.7-21-1 Capstan Motor Removal

5. RM-68 Board Removal (Fig. 7-21-2)
   (1) Disconnect all of the thirteen connectors connected to RM-68 board
   (2) Remove five of screw ① fixing RM-68 board to the TTP block, then remove RM-68 board.

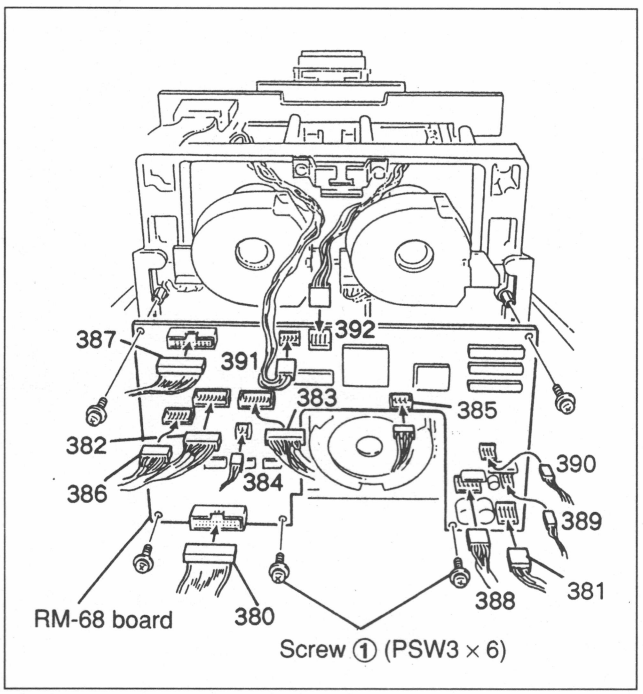

Fig.7-21-2 RM-68 Board Removal

6. Capstan Motor Removal (Fig.7-21-3)
   (1) Rotate the manual crank of the Loading Driving Gear ass'y, and move the Pinch Roller Position near the manual crank.
   The Loading Ring moves, therefore it is easy to remove the screws ① shown in the figure.
   (2) Remove the three of screw ① fixing the Capstan Motor. Draw out the Capstan Motor from the back of the TTP ass'y.

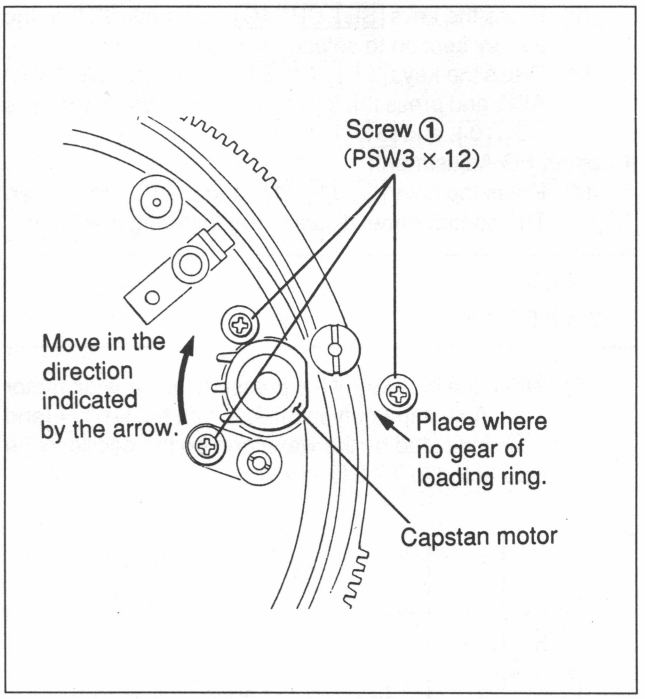

Fig.7-21-3 Capstan Motor Removal and Installation

7. Capstan Motor Replacement and Installation (Fig. 7-21-3)
   Replace the capstan motor with a new one and insert a motor shaft from the back side of the TTP block. Move the capstan motor in the direction indicated by the arrow when viewed from the top and install it with three of screw ①.

8. RM-68 Board Installation
   Install RM-68 board in the reverse order of step 5.

9. TTP Block Movement
   Install it in the reverse order of step 4.

10. Harness Arrangement (Fig. 7-21-4)
    Lightly press the harness from Fixing head board (AH-22) against the Harness guard, and install the Harness guard to Capstan motor housing using a nylon rivet. (Refer to Fig. 7-12-9)

11. Pinch Roller Press Block Installation
    Install the pinch roller press block referring to Section 7-20.

12. Limiter Clearance Check and Adjustment
    Check and adjust the limiter clearance referring to Section 7-20.

13. Cassette Compartment Ass'y Installation
    Install the cassette compartment ass'y in the reverse order of step 1.

14. Capstan Motor Shaft Cleaning
    Clean the capstan motor shaft with cloth moistened with cleaning fluid.
    After cleaning, wipe it with dry cloth two or three times.

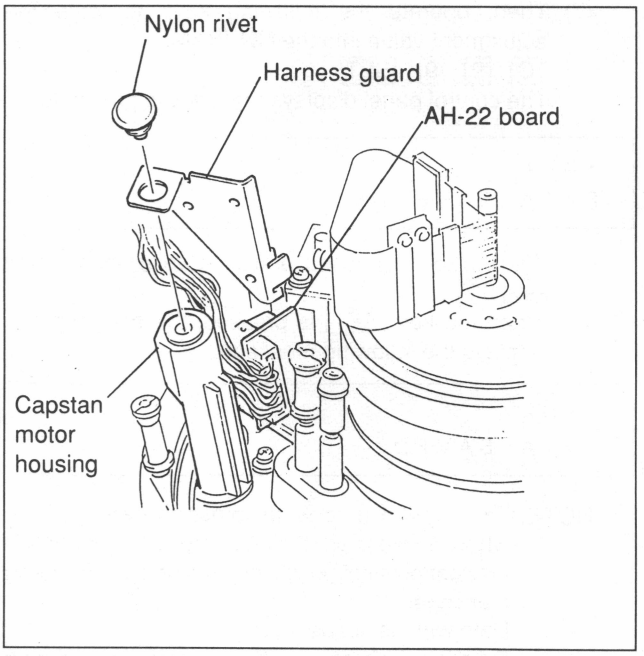

Fig.7-21-4 Harness Arrangment

15. Capstan FG Adjustment
    (1) Open the control panel 90 degrees, and connect an oscilloscope to TP-31 on the SV-116 circuit board.
    (2) Press the keys [SET UP], [C], [−], and [SET] in the 21-key section to select test mode.
    (3) Press the keys [1], [7], [SET], and [+] to select TTP ADJ, and press the key [SET]. Then, press the keys [C], [0], and [SET].

[Capstan FG Adjustment]

    (4) Press the keys [C], [1], [1], and [SET] in this order. The control panel displays the following message.

```
××××
CAPSTAN          FG−A
```

    (5) When the blue key [IN] is pressed, the capstan motor runs. Adjust the duty to 50±4% wirh the keys [+] and [−] as indicated by the waveform on the oscilloscope connected to TP-31.

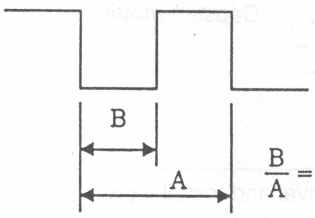

$\frac{B}{A} = 0.5$ (Specified value ±4%)

    (6) When this requirement is met, press the blue key [IN] and key [SET] to stop the capstan motor.
    (7) Then, operate the following keys to write the adjustment value into the NOVRAM.
    [C], [9], [9], [SET]
    The control panel displays the following message.

```
××××
DATA SAVE OK?
```

    With the key [F] pressed, press the white key [IN]. and key [SET].
    When the key [SET] is pressed, the control panel displays the following message.

```
××××
DATA SAVED
```

NOTE: To suspend data write, press the key [SET] when the message DATA SAVE OK? appears on the control panel, which then displays the following message.
Date write is suspended.
Do not switch power off or operate keys during data write. Otherwise, adjustment data will be destroyed.

```
××××
ABORTED
```

[Capstan FG-B Adjustment]

    (8) Press the keys [C], [1], [2], and [SET] in this order. The control panel displays the following message.

```
××××
CAPSTAN          FG−B
```

    (9) When the blue key [IN] is pressed, the capstan motor runs. Make an adjustment using the keys [+] and [−] till the waveform on the oscilloscope connected to TP-31 is as shown in the figure of Step (5).
    (10) When this requirement is met, press the blue key [IN] and key [SET] to stop the capstan motor.
    (11) Then, operate the following keys to write adjustment value into the NOVRAM.
    [C], [9], [9], [SET]
    The control panel displays the following message.

```
××××
DATA SAVE OK?
```

    With the key [F] pressed, press the white key [IN] and key [SET]. The control panel displays the following message.

```
××××
DATA SAVED
```

NOTE: To suspend data write, press the key [SET] when the message DATA SAVE OK? appears on the control panel, which then displays the following message.

```
××××
ABORTED
```

Data write is suspended.
Do not switch power off or operate keys during data write. Otherwise, adjustment data will be destroyed.

16. Tape Speed Adjustment
    Adjust tape spped, referring to 8-4-2.

17. Tape Running Check
    Check tape running, referring to 8-3-1.

7-22. STATIONARY HEAD ASS'Y REPLACEMENT

Basic Knowledge

A. The stationary head ass'y consists of a CH erase head, and T/C. CTL. CUE heads. It must be replaced with a whole ass'y assembled with a head bracket (1)/(2) ass'y.

B. The stationary head ass'y is a component that must be replaced periodically. Replace the stationary head ass'y per 6000 hours.

C. Be sure not to damage the tape running surface of the stationary head ass'y.

D. Before carrying out the replacement, refer to Section 7-12, Basic Knowledge, part E.

E. Prepare the following tools for replacements and adjustments:
- Cleaning piece
  Sony Part No: 2-034-697-00
- Cleaning fluid (or an equivalent)
  Sony Part No: 9-919-573-00
- Parallel plate
  Sony Part No: J-6086-570-A
- Azimuth adjustment tool
  Sony Part No: J-6256-540-A
- Oscilloscope

F. The replacement flowchart is as follows:

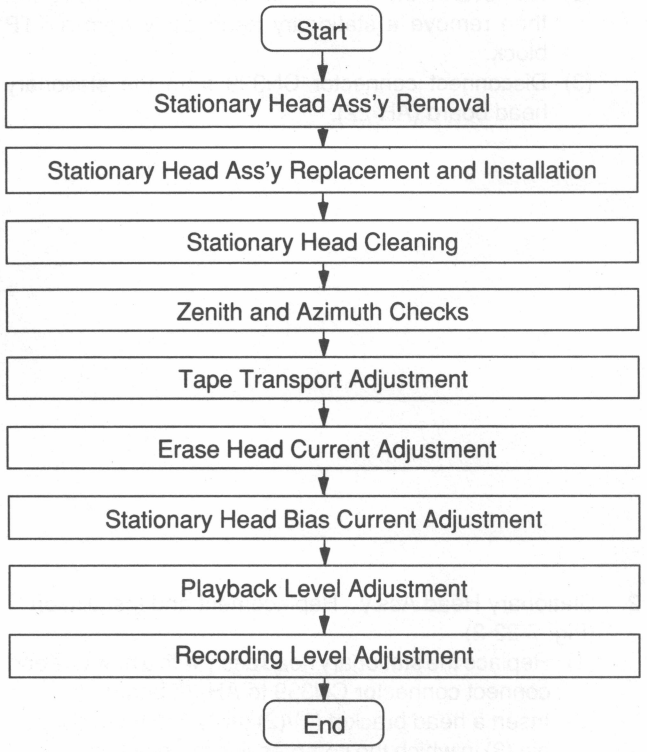

Replacement

1. Stationary Head Ass'y Removal (Fig. 7-22-1)
   (1) Remove the nylon rivet fastening to the Capstan motor housing and harness guard.
   (2) Remove screw ① and the nut shown in the figure, then remove a stationary head ass'y from a TTP block.
   (3) Disconnect connector CN399 from the stationary head board (AH-22).

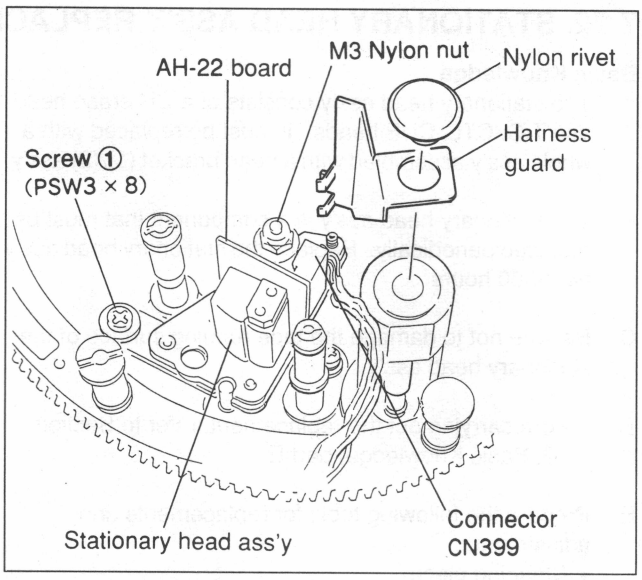

Fig.7-22-1 Stationary Head Ass'y Removal

2. Stationary Head Ass'y Replacement and Installation (Fig. 7-22-2)
   (1) Replace the stationary head ass'y with a new one and connect connector CN399 to AH-22 board.
   (2) Insert a head bracket (1)/(2) ass'y into head support pin (3) in which the compression spring shown in the figure is set.
   (3) Push the head bracket ass'y from above, insert a washer into head support pin (3), and fix it using a nut. Do not screw the nut as far as it will go. As shown in detail figure A, screw the nut so that five screw threads appear.
   (4) Fix the head bracket ass'y with screw ①. In this case, fix it so that the clearances between the head bracket's U groove and guide pin are uniform in the right and left when checked visually. (Refer to detail figure B.)
   (5) Install the Harness guard following Replacement Step 1-(1) in reverse order. (Refer to Fig. 7-12-9)

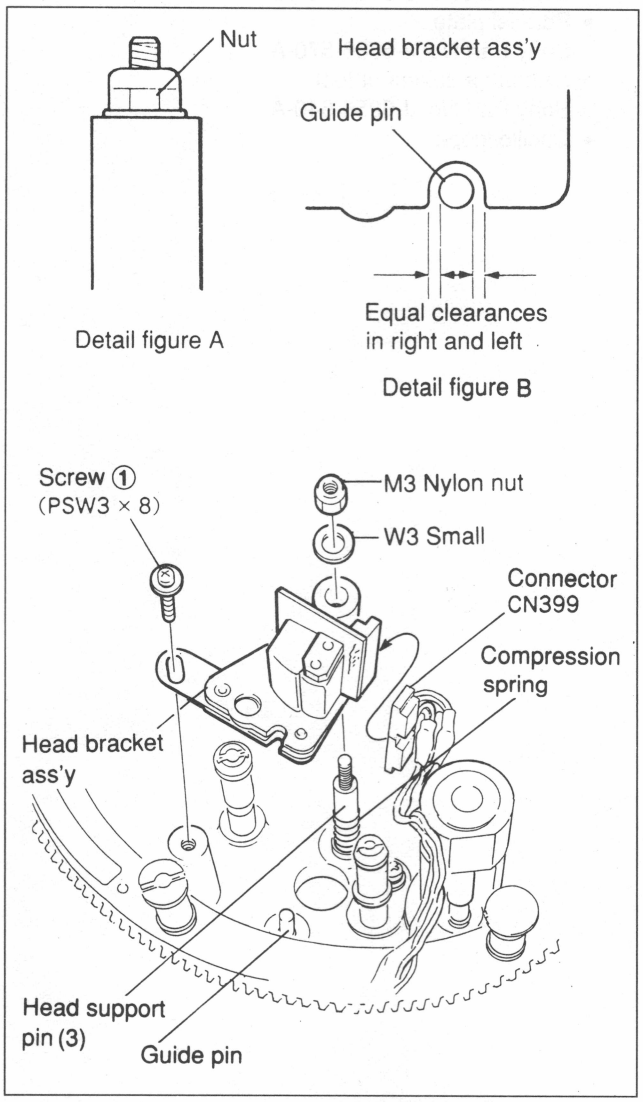

Fig.7-22-2 Stationary Head Ass'y Installation

3. Stationary Head Cleaning
   Clean the tape running surface with a cleaning cloth moistened with cleaning fluid. After cleaning, wipe it with dry cloth two or three times.

4. Zenith and Azimuth Checks
   After replacement, check the zenith and azimuth using a tool. Confirm that the zenith or azimuth is parallel with the slant of tape guide 4 as reference. If it is not parallel, perform the adjustments below.
   (1) Zenith adjustment
   As shown in Fig. 7-22-3, press the parallel plate of the tool against the guide roller of tape guide 4 and stationary head. Adjust screw ② so that no play occurs between the parallel plate and guide roller and between the parallel plate and stationary head.

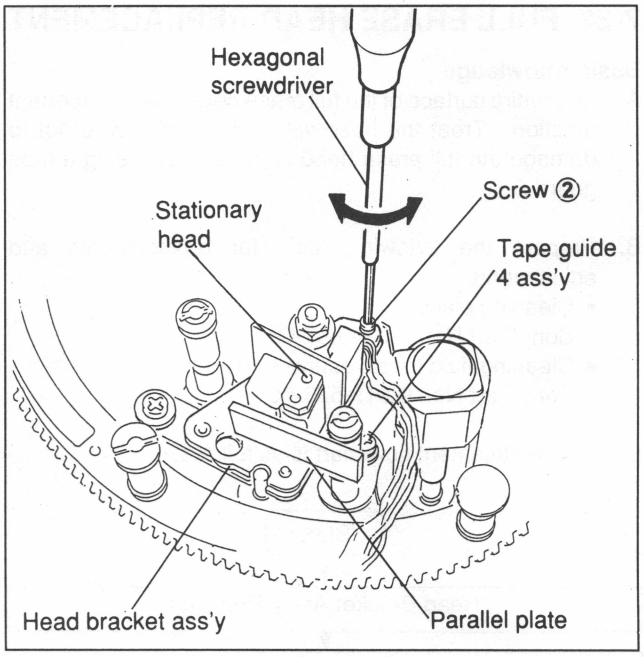

Fig.7-22-3 Zenith Adjustment

   (2) Azimuth adjustment as shown in Fig. 7-22-4, put an azimuth adjustment tool between the guide roller of tape guide 4 and stationary head. Adjust screw ③ so that the clearance between the guide roller and stationary head is parallel with the guide roller as reference.
   Note: Be careful not to damage the stationary head surface and guide roller when using the tool.

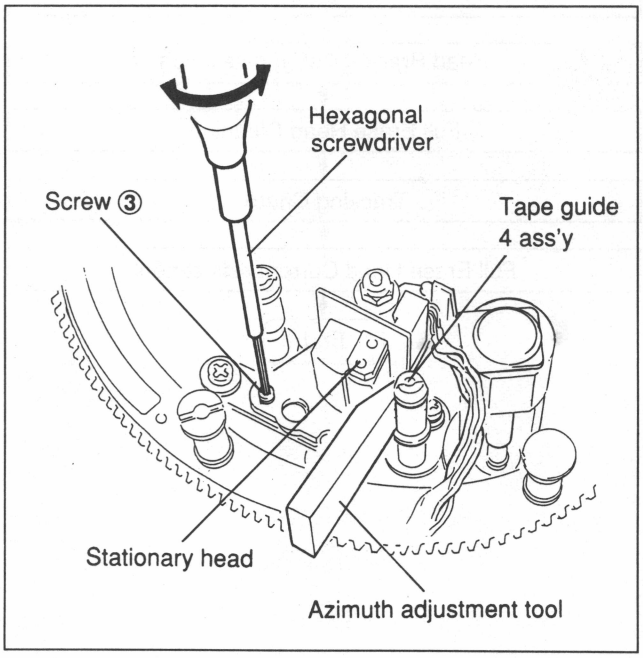

Fig.7-22-4 Azimuth Adjustment

5. Tape Transport Adjustment
   Adjust the tape transport referring to Section 8-3-2.

6. Perform the Erase Head Current Adjustment.
   Refer to Section 13-3.

7. Perform the Stationary Head Bias Current Adjustment.
   Refer to Section 13-5-1, 2.

8. Perform the Playback Level Adjustment.
   Refer to Section 13-4.

9. Perform the Recording Level Adjustment.
   Refer to Section 13-5-3.

7-23. FULL ERASE HEAD REPLACEMENT

Basic Knowledge

A. The entire surface of the full erase head has an important function. Treat the head with care. Take care not to damage the full erase head surface when using a tape guard S.

B. Prepare the following tools for replacements and adjustments:
- Cleaning piece
  Sony Part No.: 2-034-697-00
- Cleaning fluid (or an equivalent)
  Sony Part No.: 9-919-573-00

C. The replacement flowchart is as follows:

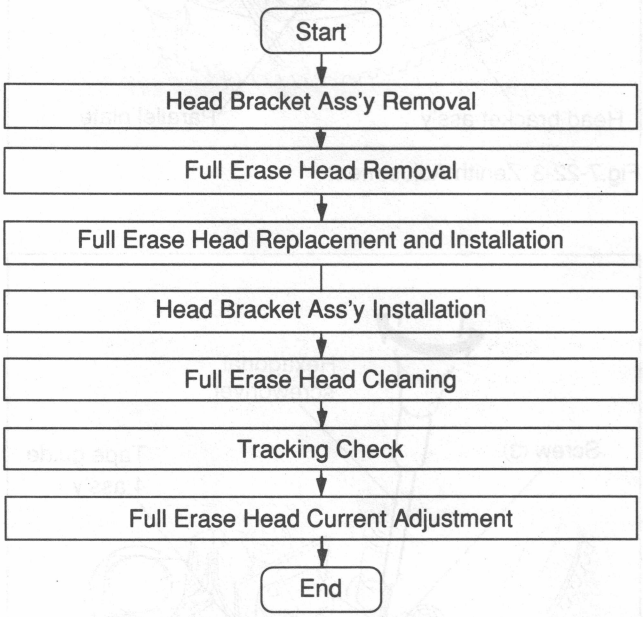

Replacement

1. Bracket Head Ass'y Removal (Fig. 7-23-1)
   (1) Disconnect connector shown in the figure.
   (2) Remove screw ① shown in the figure, then remove a head bracket ass'y from a TTP block.
   (3) Remove tape guard S from an full erase head.

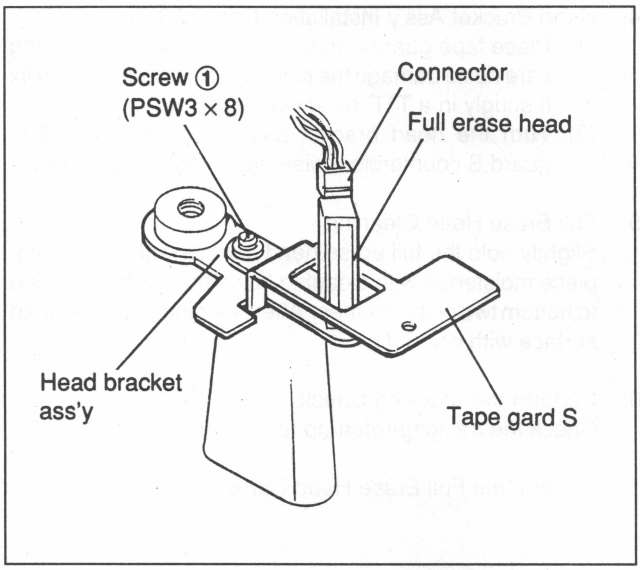

Fig.7-23-1 Bracket Head Ass'y Removal

2. Full Erase Head Removal (Fig. 7-23-2)
   Remove screw ② shown in the figure, then remove the full erase head from the head bracket ass'y.

3. Full Erase Head Replacement and Installation
   (1) Replace the full erase head with a new one and install it in the head bracket ass'y with screw ②.
   (2) Pay attention to the head's direction when installing the full erase head. As shown in the figure, move the head in the direction indicated by the arrow, then fasten.

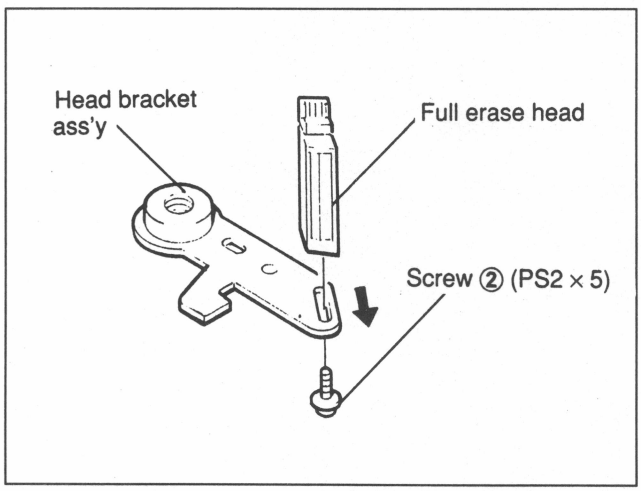

Fig.7-23-2 Full Erase Head Replacement

4. Head Bracket Ass'y Installation (Fig. 7-23-3)
   (1) Place tape guard S in the head bracket ass'y taking care not to damage the full erase head surface and fix it snugly in a TTP base with screw ①.
   (2) Turn the head bracket ass'y clockwise and tape guard S counterclockwise, then tighten screw ①.

5. Full Erase Head Cleaning
   Slightly hold the full erase head surface with a cleaning piece moistened with cleaning fluid and clean it from top to bottom two or three times. After cleaning, wipe the head surface with dry cloth.

6. Perform the Tracking Check
   Check the tracking referring to Section 8-5-1.

7. Perform the Full Erase Head Current Adjustment.

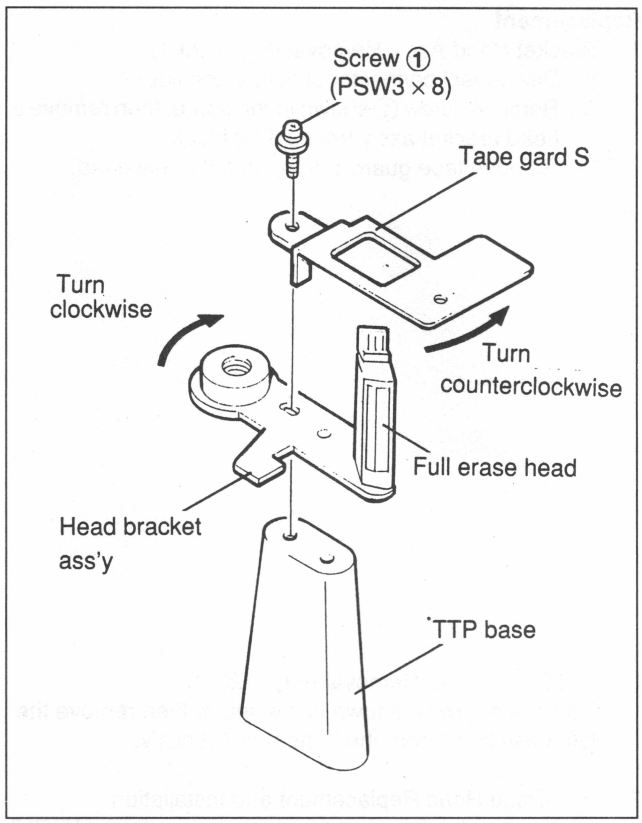

Fig.7-23-3 Head Bracket Ass'y Installation

7-24. STATIONARY HEAD CLEANER ASS'Y REPLACEMENT

Basic Knowledge

A. The stationary head cleaner ass'y mechanically cleans the CH erase head and the combined head of the T/C CTL CUE head, driven by the movement of the loading ring.

B. The head cleaner should be replaced immediately if dirt or foreign matter builds up on it and becomes difficult to remove.

C. When the head cleaner needs to be replaced, first remove the stationary head cleaner ass'y from the unit, then replace the head cleaner with a new one.

7-24-1 Head Cleaner Replacement

A. Do not attempt to remove dirt or foreign matter from the head cleaner using a brush with hard metal bristles or the like. Instead, wipe it clean using a cleaning piece or a clean cloth.

B. Do not allow oily liquids to come in contact with the head cleaner. If oil should get on the head cleaner, replace it. Should the head cleaner become wet, allow it to dry thoroughly before operating the VTR.

C. If it is necessary to replace the head cleaner but there are no replacement parts on hand, remove the stationary head cleaner ass'y from the VTR and operate it without it for the time being. Order the necessary repair parts immediately so that the fixed head cleaner ass'y can be reinstalled as soon as possible.

D. The head cleaner is designed to be replaced after every 1,000 hours of use.

E. Prepare the following tools for replacement.
- Cleaning piece
  Sony Part No.: 2-034-697-00
- Cleaning fluid (or equivalent)
  Sony Part No.: 9-919-573-00

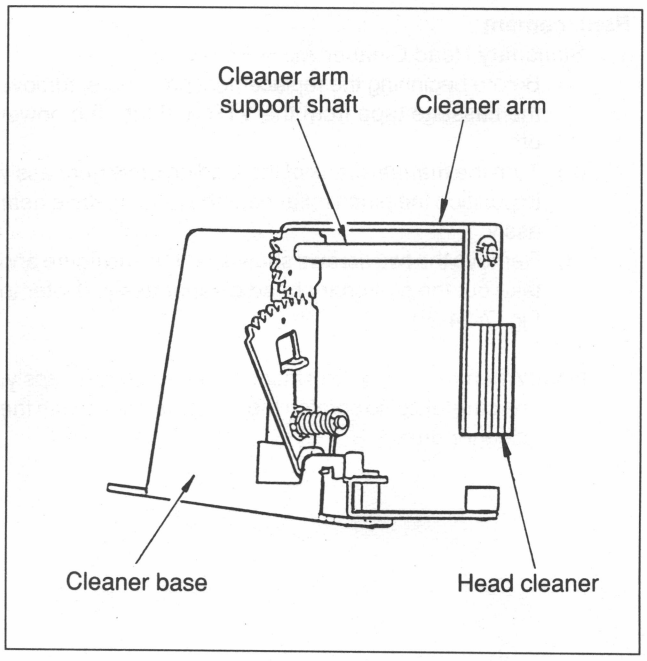

Fig. 7-24-1 Stationary Head Cleaner Ass'y

E. The replacement flowchart is as follows.

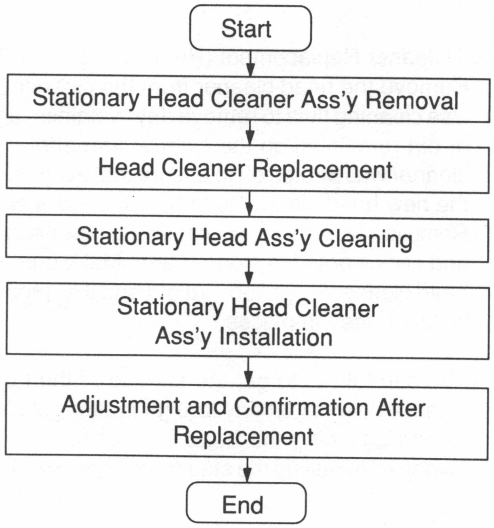

Replacement

1. Stationary Head Cleaner Ass'y Removal
   (1) Before beginning the replacement procedure, remove the cassette tape from the VTR and turn the power off.
   (2) Turn the manual crank of the loading drive gear ass'y to position the pinch roller near the loading drive gear ass'y.
   (3) Remove the two screws shown as ① in the figure and take out the stationary head cleaner ass'y. (Refer to Fig. 7-24-2.)

   Note: When removing the stationary head cleaner ass'y, be careful not to scratch the stationary head with the cleaner arm.

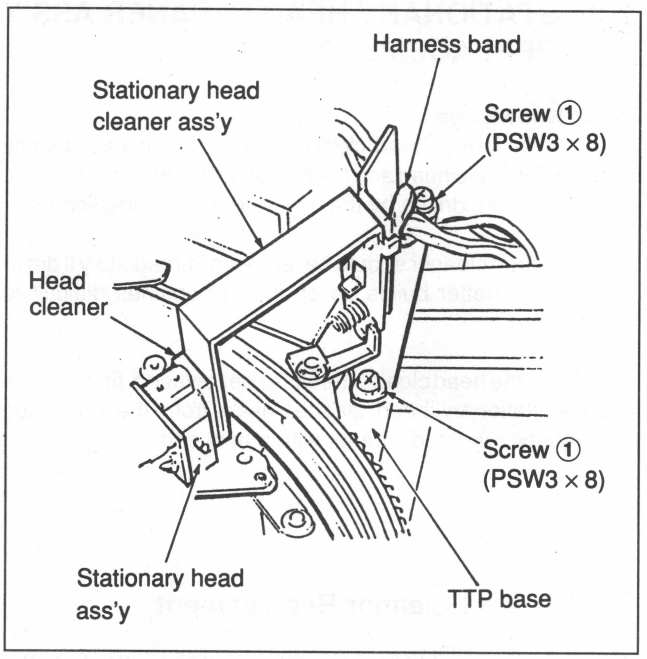

Fig. 7-24-2 Stationary Head Cleaner Ass'y Removal

2. Head Cleaner Replacement (Refer to Fig. 7-24-3.)
   (1) Remove the head cleaner from the cleaner arm.
   (2) Use cleaning fluid to remove any remaining adhesive or dirt remaining on the cleaner arm after the head cleaner was peeled off to ensure that the place where the new head cleaner is to be attached is clean.
   (3) Remove the backing paper from the new head cleaner and stick it onto the cleaner arm. Make sure that the head cleaner is applied straight and that there are no kinks or uneven places.

   Note: Be careful not to get the surface of the new head cleaner dirty or let any foreign matter get stuck to it when attaching the head cleaner to the arm and when re-installing the stationary head cleaner ass'y.

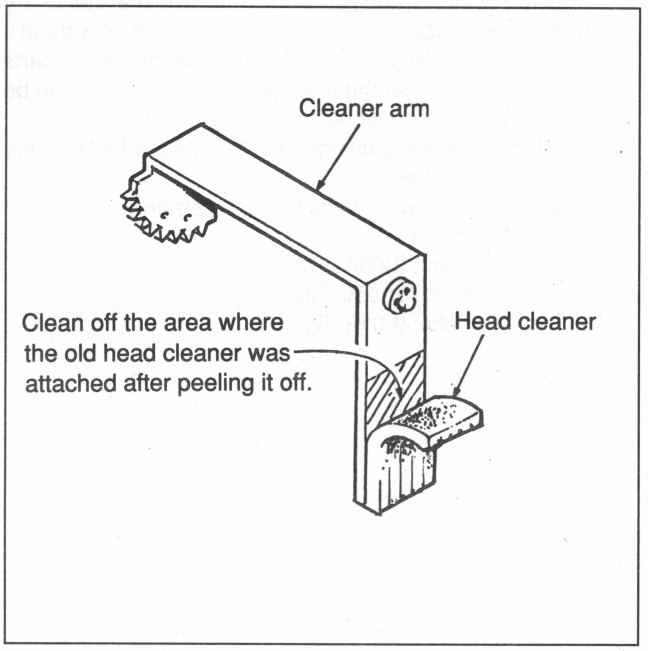

Fig. 7-24-3 Head Cleaner Removal

3. Stationary Head Ass'y Cleaning
   Apply cleaning fluid to the cleaning piece and wipe the stationary head clean.

   Note: Refer to section 6-1-5 "Stationary Head Cleaning" for cleaning instructions.

4. Stationary Head Cleaner Ass'y Installation
   (1) As when removing the stationary head cleaner ass'y, turn the manual crank of the loading drive gear ass'y to position the pinch roller near the loading drive gear ass'y.
   (2) Screw the stationary head cleaner ass'y into place on the tape transport base using the two screws marked ① in the illustration. One of the screws is also used to secure the harness in place. Make sure that the harness does not come into contact with the arm.

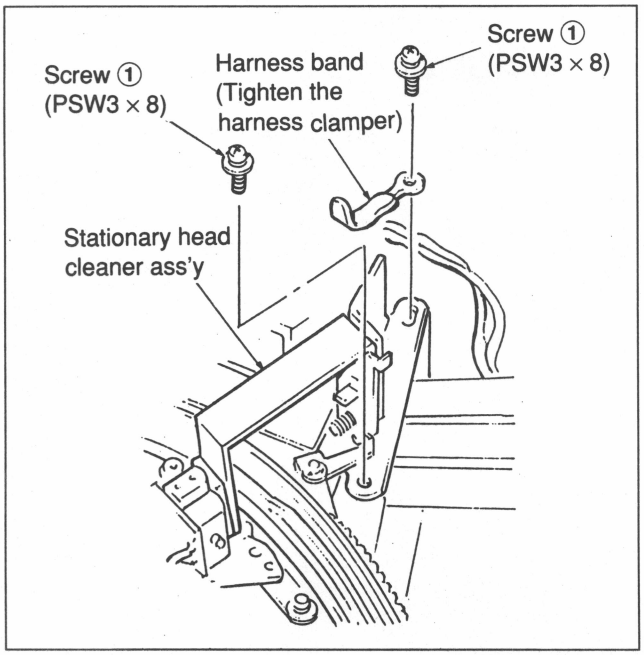

Fig. 7-24-4 Stationary Head Cleaner Installation

5. Adjustment and Confirmation After Replacement
   (1) Turn the manual crank to move between the threading and unthreading ends. During this operation, confirm that the cleaner arm moves smoothly, that the head cleaner (the white sponge section) makes even contact with the stationary head and that it wipes the stationary head clean as it should.
   (2) If the head cleaner does not make even contact with the stationary head, adjust the angle of the cleaner arm by bending it as shown in the figure (Fig. 7-24-5). Be careful when making adjustments not to bent the support shaft.
   (3) After the above steps are completed, turn power on and load a cassette tape. Move between the threading and unthreading ends two or three times and confirm that everything functions properly.

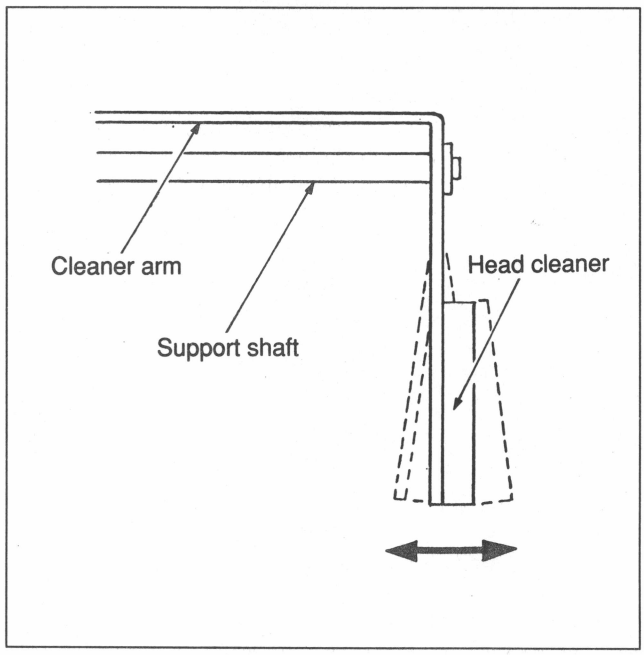

Fig. 7-24-5 Cleaner Arm Angle Adjustment

SECTION 8
TAPE TRANSPORT ALIGNMENT

Use this flowchart and adjustment when replacing a component influencing the tape transport system or when taking measures against a fault to be detected.

8-1. ADJUSTMENT FLOWCHART

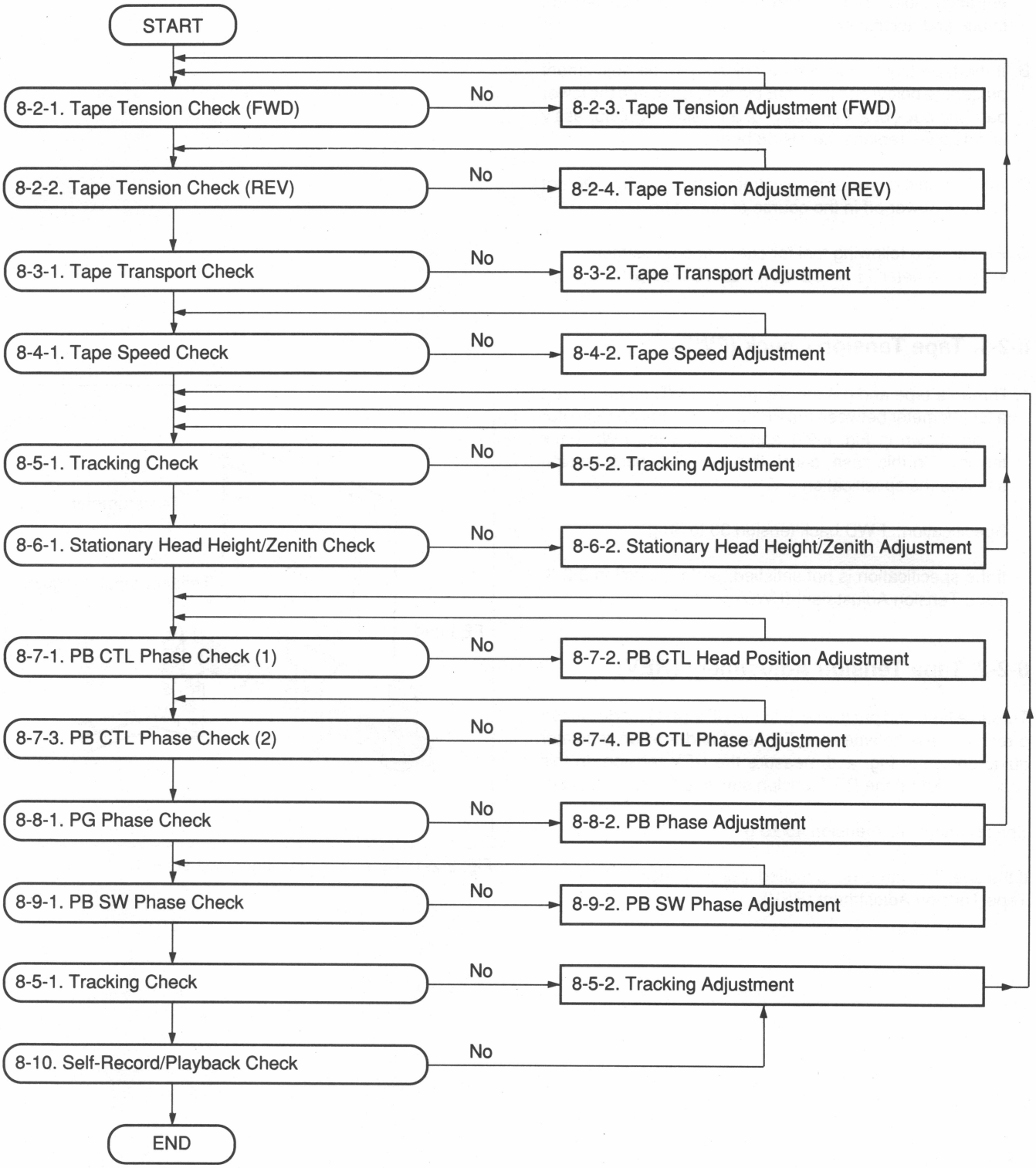

8-2. TAPE TENSION CHECK AND ADJUSTMENT

Basic Knowledge

A. The tape tension of HDV-10 is controlled on the drum entrance side. This section describes the tape tension check and adjustment.

B. If the tape tension cannot be adjusted in the adjustment procedure below and the DME block inserted into the lower part (the back of a TTP ass'y) of a tension regulator ass'y is defective, replace the TR-58 board.

C. Perform this check and adjustment consistently. Do not turn the power off in the course of operation.

D. Prepare the following tool for check and adjustment:
- Tentelometer T_2-H_7-CB USA/TENTEL Corp.

8-2-1. Tape Tension Check (FWD)

1. Thread a tape and put the set into the FWD mode. Insert a tentelometer between the FE head and tension regulator guide shown in Fig. 8-2-1 and measure the FWD back tension. In this case, check that the FWD back tension satisfies the specification.

   Specification: FWD back tension 33 to 36 g

   If the specification is not satisfied, perform section 8-2-3. Tape Tension Adjustment (FWD).

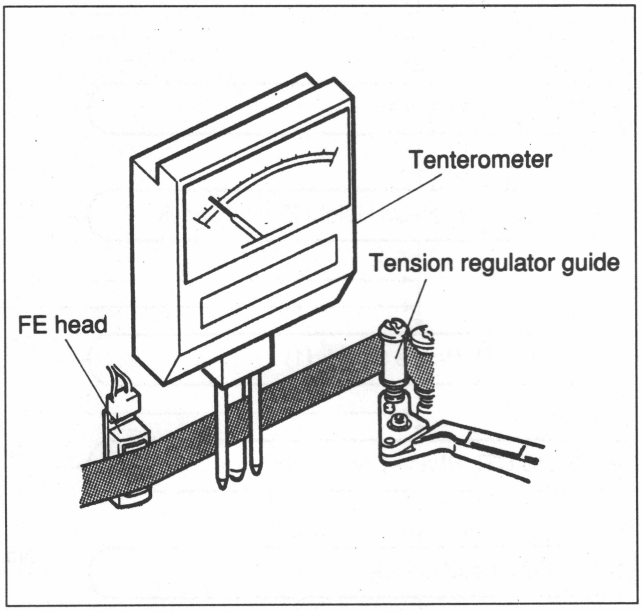

Fig. 8-2-1. Tape Tension Check/Adjustment

8-2-2. Tape Tension Adjustment (REV)

Thread a tape and put the set into the REV (X-1) mode. Insert a tentelometer between the FE head and tension regulator guide shown in Fig. and measure the REV tension. In this case, check that the REV tension satisfies the specification.

Specification: REV tension 45 ±5 g

If the specification is not satisfied, perform section 8-2-4 Tape Tension Adjustment (REV).

TENTEL/tentelometer is a registered trademark/merchandise of TENTEL Corp., U.S.A..

8-2-3. Tape Tension Adjustment (FWD)

1. Thread a tape and put the set into the REC mode. Measure the FWD back tension shown in Fig.8-2-1.
   Operate the 21-key section on the control panel so that the FWD back tension satisfies the specification, then adjust.
   Specification: FWD back tension 33 to 36 gr

   (1) Press the keys [SET UP], [C], [−], and [SET] in the 21-key section to select test mode.
   (2) Press the keys [1], [7], [SET], and [+], and [+] to select TTP ADJ, and press the key [SET]. The control panel displays the following message.

```
T*R  XX:XX:XX:XX              X    X
TTP  ADJ              OOOO  OOOO  OOOO
```

   (3) Press the keys [C], [6], [4], and [SET] in this order. The control panel displays the following message.

```
XXXX
FWD  TENSION
```

   (4) Adjust the tension to the specified level, using the keys [+] and [−]. (If a fine adjustment is necessary, use the keys [+] and [−] while the key [F] is kept pressed.)
   When the requirement is met, press the key [SET].

   NOTE : If the tension does not change pressing the 21-key section, then check whether the number 5 of DIP SW (SW2) of SV-116 board is ON.

   (5) Operate the following keys to write the adjustment value into the NOVRAM.
   [C], [9], [9], [SET]
   The control panel displays the following message.

```
XXXX
DATA  SAVE  OK?
```

   With the key [F] pressed, press the key [IN (white)].
   When the key [SET] is pressed, the control panel displays the following message.

```
XXXX
DATA  SAVED
```

   NOTE : To suspend data write, press the key [SET] when the message DATA SAVE IS OK? appears on the control panel, which then displays the following message.

```
XXXX
ABORTED
```

   Data write is suspended. Do not switch power off or operate keys during data write. Otherwise, adjustment data will be destroyed.

2. If the tension cannot be adjusted, or the tape does not run normally,
   perform the tension regulator position adjustment and tension sensor
   GAIN/OFFSET adjustment referring to section 7-10-3, "Tension Regulator
   Arm Ass'y Replacement."

8-2-4. Tape Tension Adjustment (REV)

1. Thread a tape and put the set into the REV (X-1) mode. Measure the REV tension shown in Fig. 8-2-1. Operate the 21-key section on the control panel so that the REV tension satisfies the specification, then adjust.

   Specification : REV tension 45 ± 5 g

   (1) Press the keys [SET UP], [C], [−], and [SET] in the 21-key section to select test mode.
   (2) Press the keys [1], [7], [SET], and [+] to select TTP ADJ, and press the key [SET]. The control panel displays the following message.

```
T*R  XX:XX:XX:XX                X    X
TTP  ADJ              OOOO  OOOO  OOOO
```

   (3) Press the keys [C], [6], [5], and [SET] in this order. The control panel displays the following message.

```
XXXX
REV  TENSION
```

   (4) Adjust the tension to the specified level, using the keys [+] and [−]. (If a fine adjustment is necessary, use the keys [+] and [−] while the key [F] is kept pressed.) When the requirement is met, press the key [SET].

   NOTE : If the tension does not change pressing the 21-key section, then check whether the number 5 of DIP SW (SW2) of SV-116 board is ON.

   (5) Operate to following keys to write the adjustment value into the NOVRAM.
   [C], [9], [9], [SET]
   The control panel displays the following message.

```
XXXX
DATA  SAVE  OK?
```

   With key [F] pressed, press the key [IN (White)]. When the key [SET] is pressed, the control panel displays the following message.

```
XXXX
DATA  SAVED
```

   NOTE : To suspend data write, press the key [SET] when the message DATA SAVE IS OK? appears on the control panel, which then displays the following message.

```
XXXX
ABORTED
```

   Data write is suspended. Do not switch power off or operate keys during data write. Otherwise, adjustment data will be destroyed.

2. If the tension cannot be adjusted, or the tape does not run normally, perform the tension regulator position adjustment and tension sensor GAIN/OFFSET adjustment referring to section 7-10-3, Tension Regulator Arm Ass'y Replacement.

8-3. TAPE TRANSPORT CHECK AND ADJUSTMENT

Basic Knowledge

A. Check that there is no abnormal tape curling near each guide when the tape runs in the REC, F FWD, VAR-1, and REW modes.

B. Use a tape whose reel flanges are characterized by minimum eccentricity, and that is free from damage and wrinkles on both edges.

C. Before threading the tape, clean the tape path surface of each guide and drum.

D. Each guide is lowered when the flanges rotate clockwise, and it is raised when the flanges rotate counterclockwise. The guide height changes approximately 0.5 mm when the flanges rotate by one turn (360 degrees) clockwise and counterclockwise.

E. When the height of the guides has been adjusted, first tighten the setscrews at the top of the guides and check the tape path again.

8-3-1. Tape Transport Check

1. Put the machine into the REC mode and check the tape transport of the following guides: (Refer to Figs. 8-3-1, 8-3-2 and 8-3-3.)
   - TG-0:
     The tape should not curl at the upper and lower flanges.
   - Tension regulator guide:
     The upper edge of the tape should stably touch the upper flange of the guide, and the tape should barely curl at all.
   - TG-1:
     The lower edge of the tape should touch the lower flange of the guide, but the tape should not curl at all.
   - TG-2:
     The upper edge of the tape should stably touch the upper flange of the guide, and the tape should barely curl at all.
   - TG-3:
     The upper edge of the tape should stably touch the upper flange of the guide, and the tape should barely curl at all.
   - TG-4:
     The upper edge of the tape should stably touch the upper flange of the guide, and the tape should barely curl at all.

   - RG-1:
     The lower edge of the tape should touch the lower flange of the guide, but the tape should not curl at all.
   - RG-2:
     The tape should not curl at the upper and lower flanges.
   - RG-3:
     The tape should not curl at the upper and lower flanges.
   - RG-4:
     The tape should not curl at the upper and lower flanges.

   - TG-5:
     The tape should not curl at the upper and lower flanges.

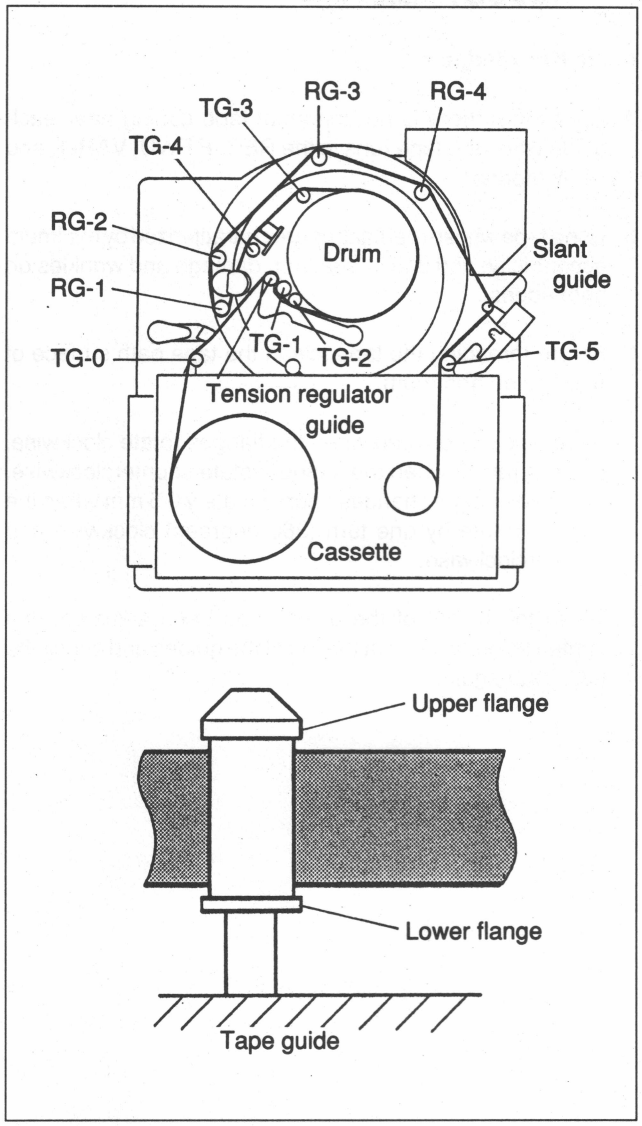

Fig. 8-3-1. Tape Transport Check

   - Curling judgement standards
     Minute curling beside the flange, which causes no damage on the tape, as shown in Figure 8-3-2 (a) is OK. (Adjustments must be made, however, to minimize or to eliminate wrinkles and curlings).
     The state shown in Figure 8-3-2 (b), in which the tape is bent under the flange (the tape has ran onto the flange), is NG.
     The same oriteria are applicable also to the lower flange.

2. If the tape path does not satisfy the items above, adjust the height of the guides in accordance with the adjustment procedure of section 8-3-2. Tape Transport Adjustment.

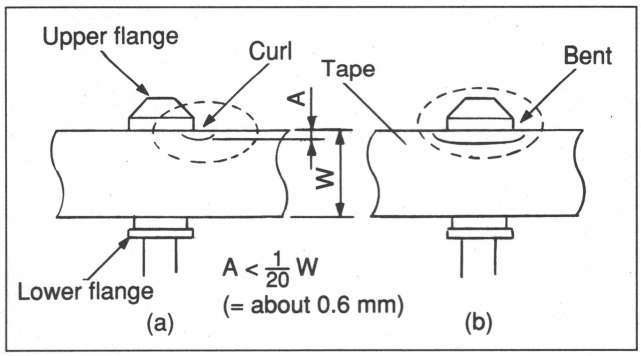

Fig. 8-3-2. Curl Judjment

8-3-2. Tape Transport Adjustment

Basic Knowledge

A. The standard of the reel table and guide height is shown in Fig. 8-3-3. When a component has been replaced, mount the component referring to the value shown below.
For more details, refer to the height adjustment of each guide.

B. Before threading a tape, clean the tape path surface of each guide and drum.

1. Supply and take-up reel table height check
Check the height of each reel table referring to section 7-9-1. Reel Table Replacement.
If the specification is not satisfied, perform the reel table height adjustment.

2. TG-0 guide height check
Check the TG-0 guide height and guide perpendicularity referring to section 7-11-1. TG-0 Guide Ass'y Replacement.
If the specification is not satisfied, perform the guide height or guide bending adjustment.

3. Tension regulator guide slant check
Check the tension regulator guide slant referring to section 7-10-1. Tension Regulator Guide Ass'y Replacement.
If the specification is not satisfied, perform the tension regulator guide slant adjustment.

4. Stationary head zenith/azimuth check
Check the zenith and azimuth of the stationary head referring to section 7-22. Stationary Head Ass'y Replacement. If the specification is not satisfied, perform the stationary head's zenith or azimuth adjustment.

5. TG-5 guide height check
Check the TG-5 guide height referring to section 7-17. TG-5 Guide Ass'y Replacement.
If the specification is not satisfied, perform the guide height adjustment.

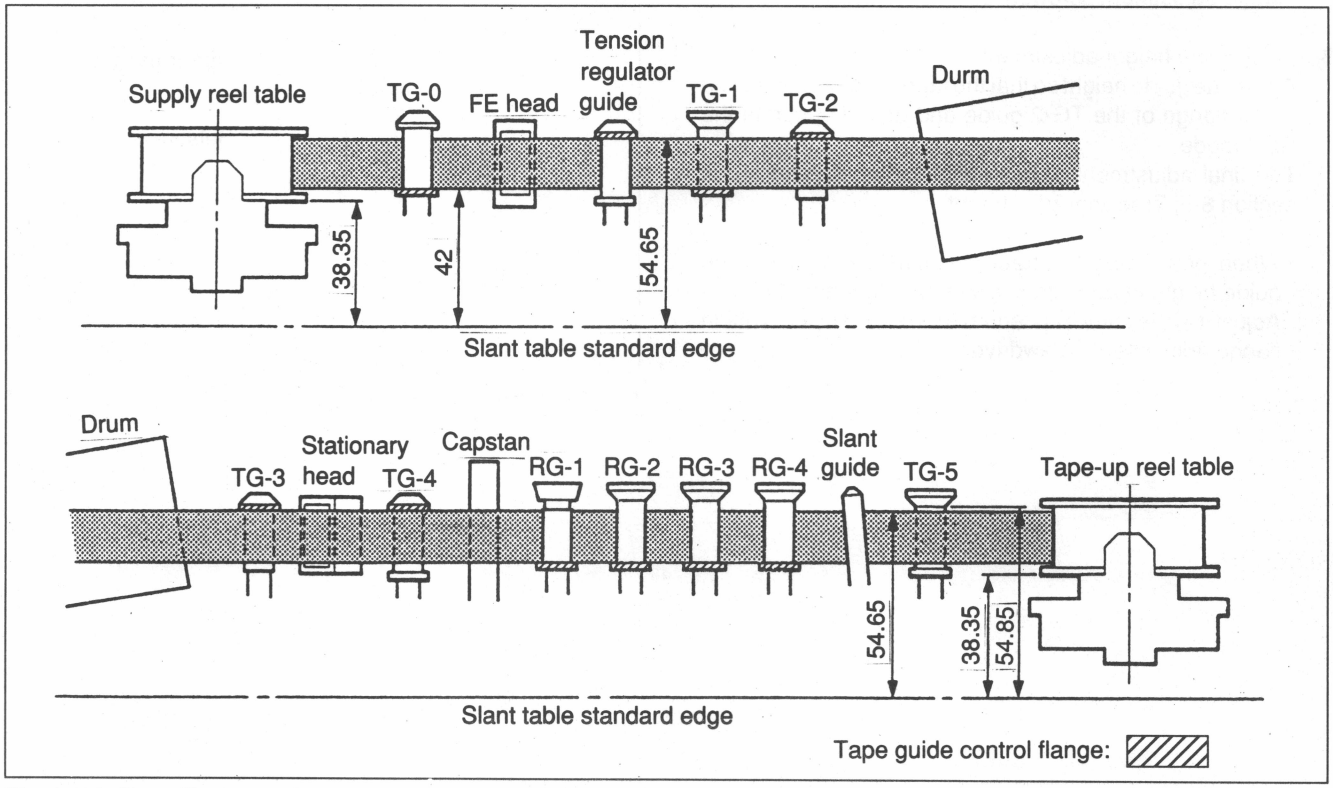

Fig. 8-3-3. Tape Transport Adjustment

6. Tension regulator guide height adjustment (Refer to Fig. 8-3-4.)
   Adjust the guide height so that the tape slightly touches the upper flange of the tension regulator guide and does not curl in the REC mode.
   The final adjustment of this guide will be carried out in section 8-5. Tracking Adjustment.

   * When performing the tracking adjustment, adjust the guide height in accordance with the procedure below.

   (1) Loosen the setscrew of the upper flange using a guide flange adjustment screwdriver.
   (2) Put the machine into the REC mode.
   (3) Turn the screwdriver right and left and adjust the flange height.
   (4) Turn the knob with the screwdriver held and tighten the setscrew. (Tightening torque: 6 ± 1 kg.cm)

7. TG-1 guide height adjustment
   Adjust the guide height so that the tape does not touch the upper and lower flanges of the TG-1 guide.
   The final adjustment of this guide will be carried out in section 8-5. Tracking Adjustment.

   * When performing the tracking adjustment, adjust the guide height in accordance with the procedure below.
   Adjust it in the same procedure as in step 8 using a guide flange adjustment screwdriver.

8. TG-2 guide height adjustment
   Adjust the guide height so that the tape slightly touches the upper flange of the TG-2 guide and does not curl in the REC mode.
   The final adjustment of this guide will be carried out in section 8-5. Tracking Adjustment.

   * When performing the tracking adjustment, adjust the guide height in accordance with the procedure below.
   Adjust it in the same procedure as in step 8 using a guide flange adjustment screwdriver.

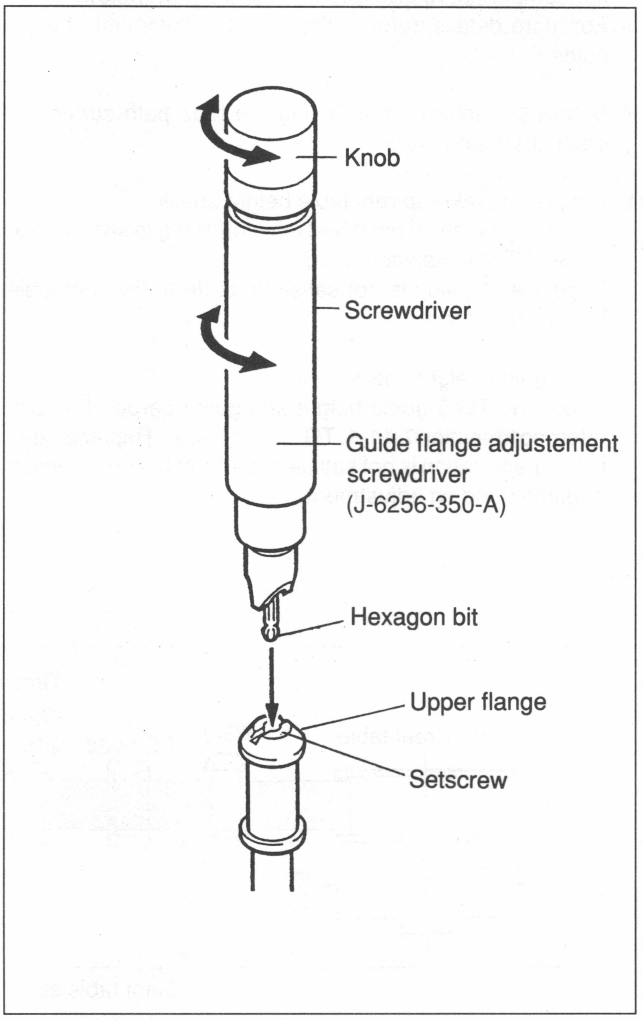

Fig. 8-3-4. Tape Guide Height Adjustment

9. TG-3 and TG-4 guide height adjustment
   Adjust the guide height so that the tape slightly touches the upper flanges of the TG-3 and TG-4 guides and does not curl in the REC mode.
   The final adjustment of this guide will be carried out in section 8-5. Tracking Adjustment.

   * When performing the tracking adjustment, adjust the guide height in accordance with the procedure below. Adjust it in the same procedure as in step 8 using a guide flange adjustment screwdriver.

10. Slant guide inclination adjustment
    Adjust the slant guide slant so that the tape does not curl at the upper and lower flanges of the TG-5 guide in the REC mode. The final adjustment of this guide will be carried out in section 8-5. Tracking Adjustment.

    * When performing the tracking adjustment, adjust the guide inclination in accordance with the procedure below. (Fig. 8-3-5)
    (1) Loosen the setscrew of a slant guide adjustment plate.
    (2) Put the machine into the REC mode.
    (3) Move the slant guide adjustment plate before and behind and adjust the inclination.
    (4) Tighten the setscrew.

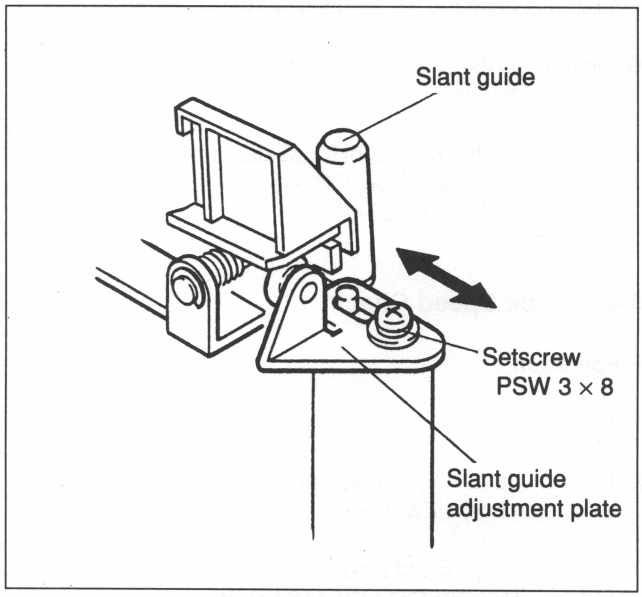

Fig. 8-3-5. Slant Guide Adjustment

8-4. TAPE SPEED CHECK AND ADJUSTMENT

Basic Knowledge

A. This check and adjustment are required only when abnormality was found in the tape speed or the capstan motor, and SV-116 board have been replaced.

B. This check and adjustment are performed to set the tape speed in the REC mode to the specified value. The tape speed is adjusted by rewriting NOVRAM data.

C. Do not turn the power off halfway during adjustment. If the power is turned off halfway, restart from the beginning.

D. Prepare the following tool for adjustment:
- Alignment tape (Type: GR2-1)
  Sony Part No.: 8-960-040-11

8-4-1. Tape Speed Check

Preparation

1. Remove the control panel.

2. Extract the SV-116 board and mount it again through extension board EX-212.

3. Connect the probe of an oscilloscope as described below.
   CH-1: TP3 (PB CTL)/SV-116 board
   CH-2: TP9 (FRAME PULSE)/SG-169 board
   Trigger: CH-2 (Fig. 8-4-1)

4. Set the test menu as shown below and adjust so that the capstan servo is not locked.
   (1) Press the keys [SET UP], [C], [−], and [SET] in the 21-key section to select test mode.
   (2) Press the keys [1], [7], [SET], [+], [+], [+], and [+] to select EXTEND, and press the key [SET]. Then press the keys [1], [3], and [SET], the control panel displays the following message.

```
XXXX
E13. LOCKED   SLOW×1
```

   (3) Press the keys [+] or [−] to select DISABLE, and press the key [SET]. The control panel displays the following message.

```
XXXX                              DISABLE
E13. LOCKED   SLOW×1
```

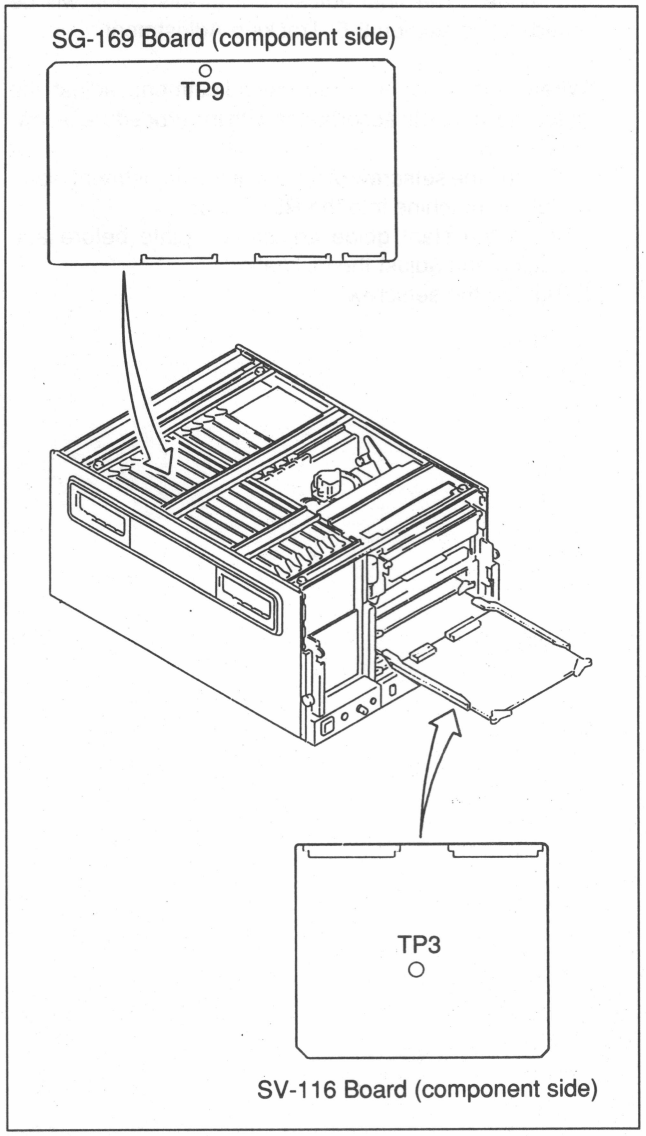

Fig. 8-4-1. Oscilloscope Connection

(4) Press the key [SET UP] to put off the SET UP display.

5. Set the time base of the oscilloscope to 5 msec/DIV.

Check

6. Thread an alignment (GR2-1) tape and observe the movement at the falling or rising edge of a CH-1 (PB CTL) pulse shown in Fig. 8-4-2 when the tape runs at VAR + 1.0 times the normal speed.

   Specification: The movement for five second must be within ±1 DIV (5 msec).

7. If the specification above is not satisfied, perform section 8-4-2. Tape Speed Adjustment.

8-4-2. Tape Speed Adjustment

Preparation

1. Perform steps 1 through 5 of section 8-4-1. Tape Speed Check.

2. Set the test menu as shown below.
   (1) Press the keys [SET UP], [C], [−], and [SET] in the 21-key section to select test mode.
   (2) Press the keys [1], [7], [SET], [+], and [+] to select TTP ADJ, and press the key [SET]. The control panel displays the following message.

```
T*R  XX:XX:XX:XX              X    X
TTP  ADJ              OOOO  OOOO  OOOO
```

   (3) Press the keys [C], [6], [9], and [SET] in this order. The control panel displays the following message.

```
XXXX
CAPSTAN  SPEED  ADJ
```

   (4) Adjust the speed to the specified level, using the keys [+] and [−]. (If a fine adjustment is necessary, use the keys [+] and [−] while the key [F] is kept pressed.) When the requirement is met, press the key [SET].

   Specification : The movement for five second must be within 1 DIV (5 msec).

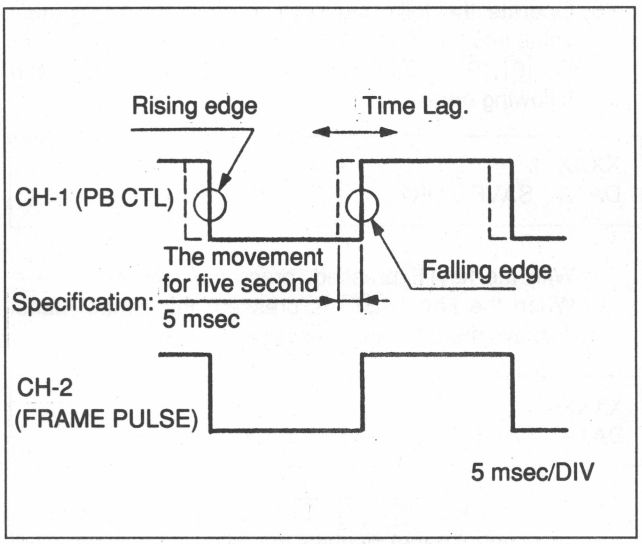

Fig. 8-4-2. Tape Speed Check

(5) Operate the following keys to write the adjustment value into the NOVRAM.
[C], [9], [9], [SET] The control panel displays the following message.

```
XXXX
DATA  SAVE  OK?
```

With the key [F] pressed, press the key [IN (white)]. When the key [SET] is pressed, the control panel displays the following message.

```
XXXX
DATA  SAVE
```

(6) Press the keys [C], [7], [0], and [SET] in this order. The control panel displays the following message.

```
XXXX
REC  SPEED  ADJ
```

(7) Adjust the speed to the specified level, using the keys [+] and [−]. (If a fine adjustment is necessary, use the keys [+] and [−] while the key [F] is kept pressed.)
Press the index number, wait for about 10 seconds.
When the requirement is satisfied, press the key [SET].
Specification : The movement for five seconds must be within 1 DIV (5 msec).

(8) Press the key [SET] when the adjustment is done. Then press the keys [C], [7], [1], and [SET] in this order. The control panel displays the following message.

```
XXXX
SET  SPEED  DATA
```

(9) Operate the following keys to write the adjustment value into the NOVRAM.
[C], [9], [9], [SET]
The control panel displays the following message.

```
XXXX
DATA  SAVE  OK
```

With the key [F] pressed, press the key [IN (white)]. When the key [SET] is pressed, the control panel displays the following message.

```
XXXX
DATA  SAVE
```

(10) Press the key [SET UP] to put off the SET UP display.

8-5. TRACKING CHECK AND ADJUSTMENT

Basic Knowledge

A. The purpose of this check or adjustment is to maintain the tape interchangeability by adjusting the head-to-tape contact, and head trace onto the recorded track correctly using an alignment tape.

B. Use an alignment tape that is free from wrinkles or damage on tape edges.

C. When the upper drum ass'y has been replaced, warm up the machine in the REC mode for about 20 minutes using a blank tape to obtain a good head-to-tape contact before performing this tracking check.

D. Prepare the following tool for check and adjustment:
- Alignment tape (Type: GR2-1)
  Sony Part No.: 8-960-040-11

8-5-1. Tracking Check

Preparation

1. Connect the probe of an oscilloscope as described below. (Refer to Fig. 8-5-1.)
   CH-1: TP4 (PROC)/DM-77 (A) board
   CH-2: TP4 (PROC)/DM-77 (B) board
   Trigger: TP9 (FRAME PULSE)/SG-169 board

2. Thread an alignment tape (GR2-1), put the machine into the PLAY mode, and play back the CH-A recorded portion for 10 to 45 min.

3. Turn the tracking control and adjust so that the playback RF waveform is maximum. (Refer to Fig. 8-5-2.)

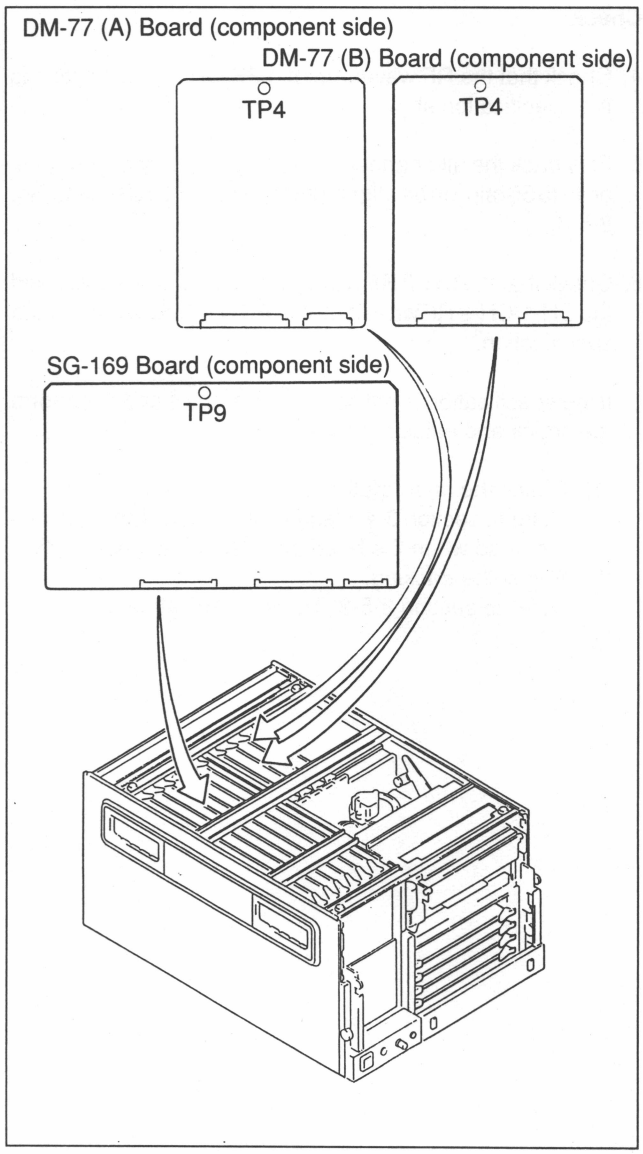

Fig. 8-5-1. Oscilloscope Connection

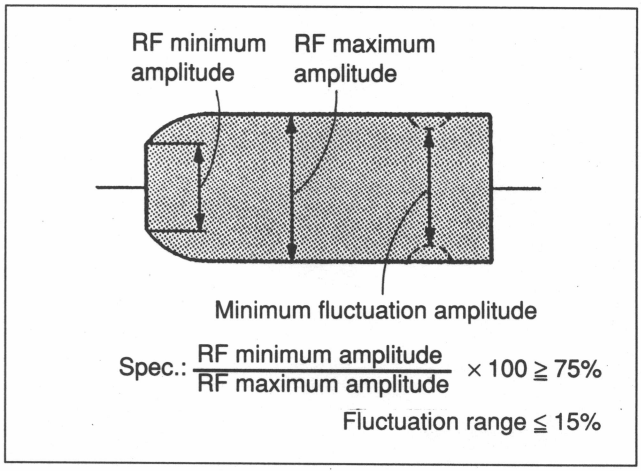

Fig. 8-5-2. Tracking Check (1)

Check

4. Check that the RF waveform of a PB CH-A pulse satisfies the specification shown in Fig. 8-5-2.

5. Play back the all-channel recorded portion for 0 to 10 min. or 45 to 55 min. on an alignment tape (GR2-1). (Refer to Fig. 8-5-3.)

6. Check that the CH-2 RF waveform of a PB CH-A pulse and the CH-1/CH-2 RF waveform of a PB CH-B pulse satisfy the specification.

7. If the specification is not satisfied in steps 4 and 6, perform the check and adjustment below.

   (1) Check the head protrusion.
   Refer to section 6-4. Head Protrusion Check. Replace the head when the head protrusion reaches the life.
   (2) Adjust the tracking.
   Refer to section 8-5-2. Tracking Adjustment.

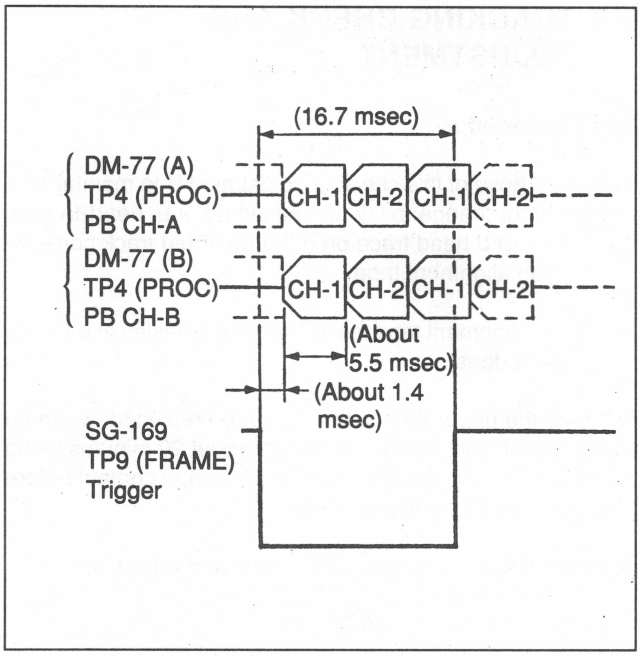

Fig. 8-5-3. Tracking Check (2)

8-5-2. Tracking Adjustment

Basic Knowledge

A. Adjustment points
- Perform this adjustment with the height adjustment of the guides below.
  Tape entrance side: Tension regulatorguide, and TG-1 and TG-2 guides
  Tape exit side: TG-3 and TG-4 guides
- Be sure to adjust the RF waveform at the tape entrance side first, then at the tape exit side.
- When handling the tape, be sure to touch the back-coated surface, not to touch the magnetized surface.
- Do not perform the TG-0 an TG-5 guide adjustment unnecessarily.

B. If the tracking cannot be correctly adjusted due to the worn head or drum lead surface, replace the necessary part referring to Chapter 5, Periodical Check List.

C. The flowchart for adjustment is as follows:

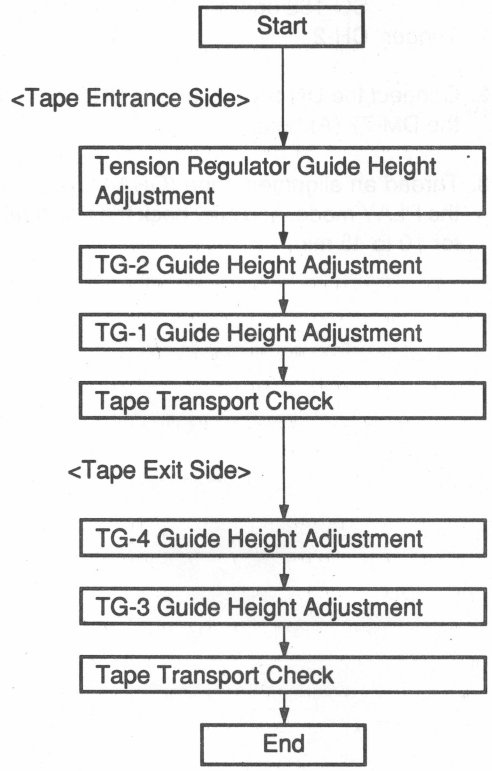

Preparation

1. Oscilloscope connection
   CH-1: Connects the BNC connector of a BNC-UM cable.
   CH-2: Connects the probe to TP9 (FRAME PULSE) / SG-169 board.
   Trigger: CH-2

2. Connect the UN connector of a BNC-UM cable to TP4 on the DM-77 (A) board.

3. Thread an alignment tape (GR2-1), put the machine into the PLAY mode, and play back the CH-A recorded portion for 10 to 45 min.

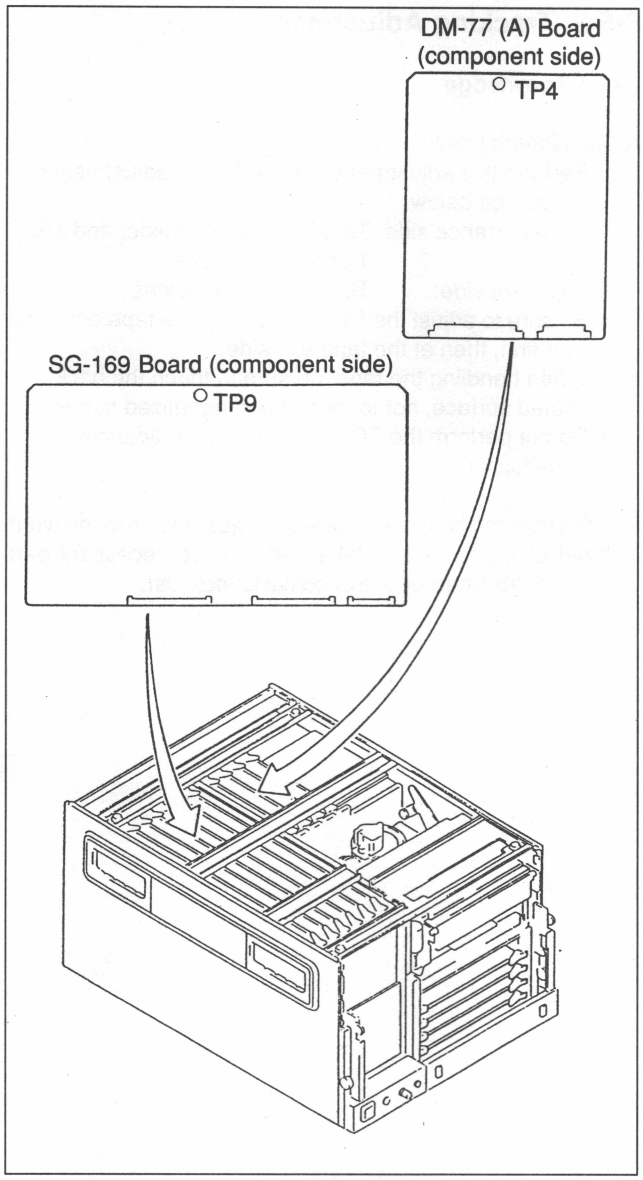

Fig. 8-5-4. Oscilloscope Connection

RF contact waveform adjustment at tape entrance side

4. Set the switch position of an oscilloscope so that all the RF waveforms at the tape entrance side can be viewed. (Refer to Fig. 8-5-5.)

5. Set in accordance with the procedure below so that the RF waveform amplitude at the tape entrance side is 80% from its maximum level.

   (1) Turn the tracking control so that the RF waveform amplitude is maximum.
   (2) Turn the tracking control clockwise, and adjust the RF waveform amplitude to 80% of its maximum level.

6. Tentatively adjust the TG-1 guide height so that the tape does not touch the upper and lower flanges of the TG-1 guide. (Refer to Fig. 8-5-6.)

   * Set free from the limitation.

7. Tentatively adjust the TG-2 guide height so that the tape does not touch the upper flange of the TG-2 guide.

   * Set free from the limitation.

8. Loosen the guide flange of the tension regulator guide.

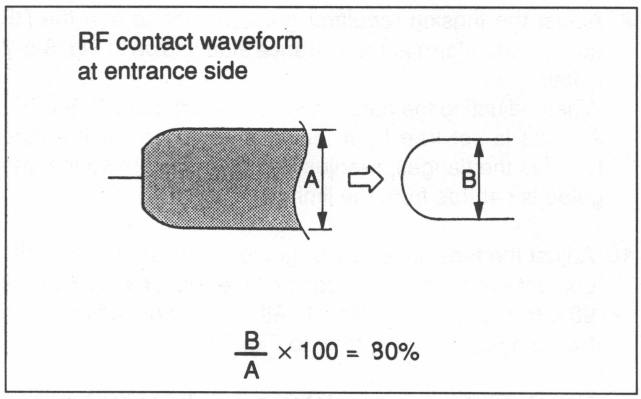

Fig. 8-5-5. Set Entrance Side of RF Waveform

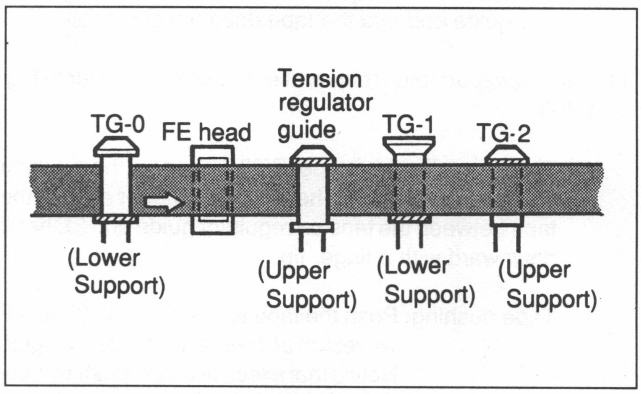

Fig. 8-5-6. Adjust Tape Entrance Side

9. Adjust the tension regulator guide height so that the RF contact waveform at the entrance side shown in Fig. 8-5-7 is flat.
   When adjusting the guide height, check that the TG-1/TG-2 guide is set free from the tape limitation. (If the tape touches the flanges, readjust the guide height so that the guide is set free from the limitation.)

10. Adjust the tension regulator guide height so that the RF contact waveform amplitude at the entrance side is about 95% from the state in step 9. After the height adjustment, fix the guide flange. (Refer to Fig. 8-5-8.)

    Note 1: Stop the drum rotation before fixing the tension regulator guide.
    Note 2: Check that the upper edge of the tape stably touches the upper flange of the tension regulator guide and that the tape does not curl at all.

11. Tape transport return check at entrance side (Refer to Fig. 8-5-9.)

    (1) Thread an alignment tape (GR2-1), and put the machine into the PLAY mode. Then, push the upper edge of the tape between the tension regulator guide and FE head downward with a finger tip.

        Tape pushing: Push the tape to the extent that the RF waveform at the entrance side changes. Notice that excessive tape pushing may damage the tape.

    (2) Release the finger tip from the upper edge of the tape, and check that the RF waveform at the entrance side returns to the former level within two seconds.

        <For NG>
        1) Perform the tension regulator guide slant check. (Refer to section 7-10-1.)
        2) Perform the TG-0 guide height check. (Refer to section 7-11-1.)
        3) Perform the reel table height check. (Refer to section 7-9-1.)

        If steps 1), 2), and 3) above are OK, loosen the guide flange (upper flange) of the TG-0 guide. Rotate the guide flange counterclockwise by 180 degrees, then fix.

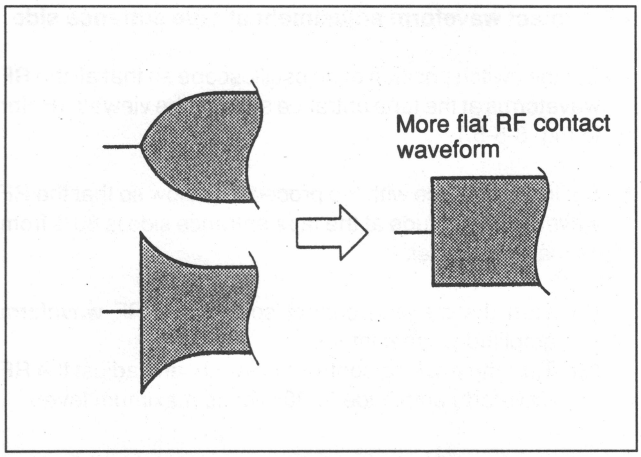

Fig. 8-5-7. RF Contact Waveform Adjustment at Entrance Side

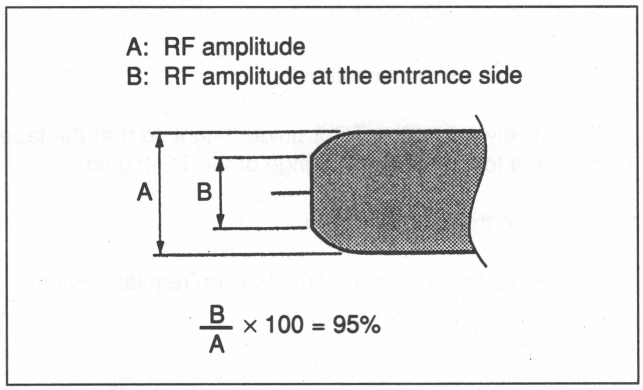

Fig. 8-5-8. Adjust the Tension Regulator Guide Height

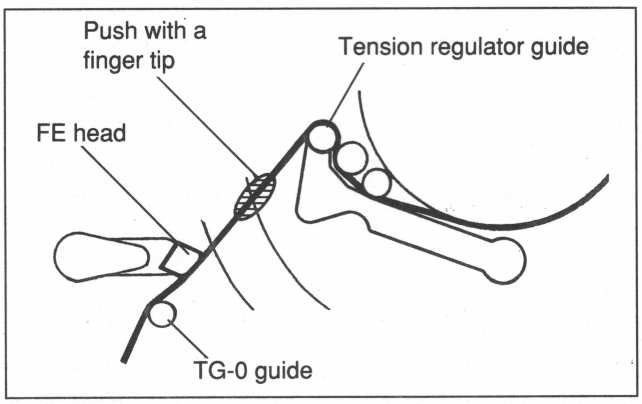

Fig. 8-5-9. Tape Transport Return Check at Entrance Side

12. Press the tape slightly in the upper flange of the TG-2 guide and adjust so that the entrance RF waveform level of 95% in step 10 is 100%. (Refer to Fig. 8-5-8/10.)
After adjustment is completed, fix the guide flange.

13. Loosen the guide flange of the TG-1 guide. Curl the tape once in the lower flange (to the extent that the RF waveform at the entrance side changes), tighten the guide flange of the TG-1 guide again, then adjust the guide flange to the position where the tape does not curl at all (the RF waveform at the entrance side returns to the former level). (Refer to Fig. 8-5-10). After adjustment is completed, fix the guide flange.

14. Put the machine into the PLAY, VAR-1, FF, and REW modes and check that the tape barely curls at all in the TG-0 guide, tension regulator guide, TG-1 guide, and TG-2 guide.

15. Turn the tracking control and check that the RF waveform at the tape entrance side becomes flat. If not, readjust steps 5 and later.

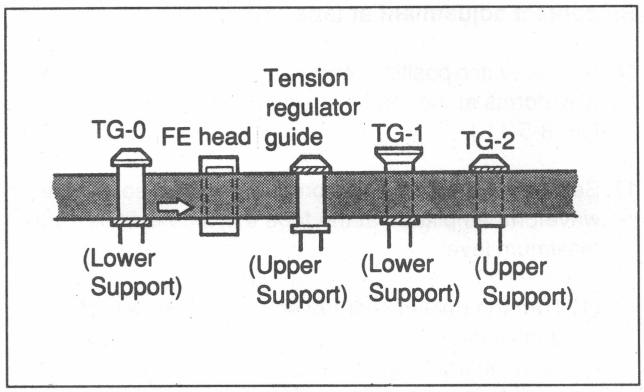

Fig. 8-5-10. After Tape Transport at Entrance Side

RF contact adjustment at tape exit side

16. Set the switch position of an oscilloscope so that all the RF waveforms at the tape exit side can be viewed. (Refer to Fig. 8-5-11.)

17. Set in accordance with the procedure below so that the RF waveform amplitude at the tape exit side is 80% from its maximum level.

    (1) Turn the tracking control so that the RF waveform amplitude is maximum.
    (2) Turn the tracking control clockwise and adjust the RF waveform amplitude to 80% of its maximum level.

18. Tentatively adjust the TG-3 guide height so that the tape does not touch the upper flange of the TG-3 guide (set free from the limitation).

19. Adjust the TG-4 guide height so that the exit RF waveform shown in Fig. 8-5-13 is flatter. When adjusting the guide height, check that the TG-3 guide is set free from the limitation. (If the tape touches the upper flange, readjust the guide height so that the TG-3 guide is set free from the limitation.)

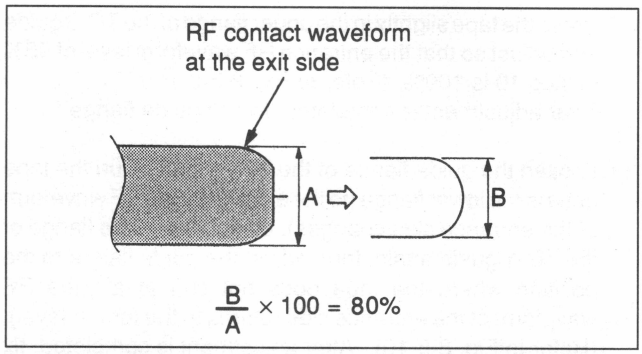

Fig. 8-5-11. Set of RF Waveforms at the Tape Exit Side

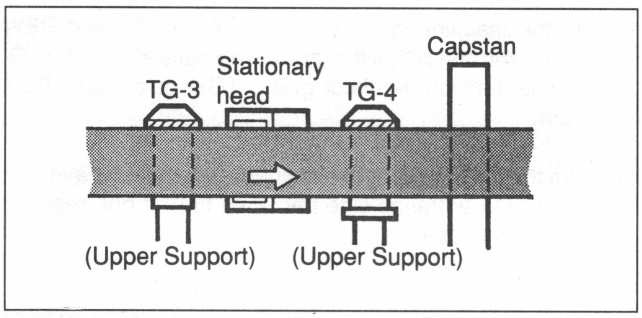

Fig. 8-5-12. Adjust TG-4 Guide at the Exit Side

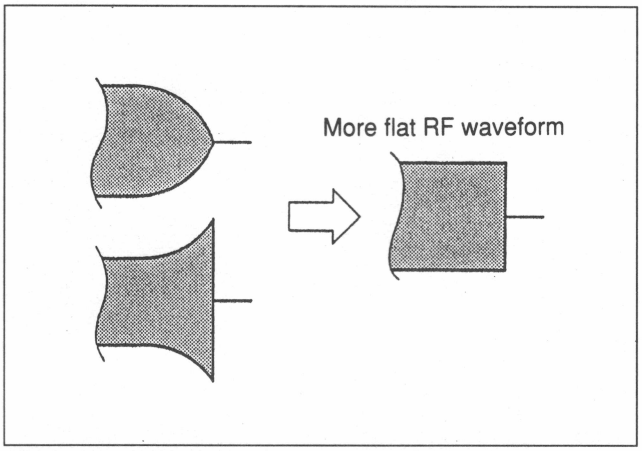

Fig. 8-5-13. RF Contact Waveform Adjustment at Exit Side

20. Adjust the TG-4 guide height so that the RF waveform amplitude at the exit side is about 95 % from the state in step 19. After adjustment is completed, fix the guide flange.

21. Press the tape slightly in the upper flange of the TG-3 guide and adjust the height so that the exit RF waveform level of 95% in step 20 is 100 %. After adjustment is completed, fix the guide flange.

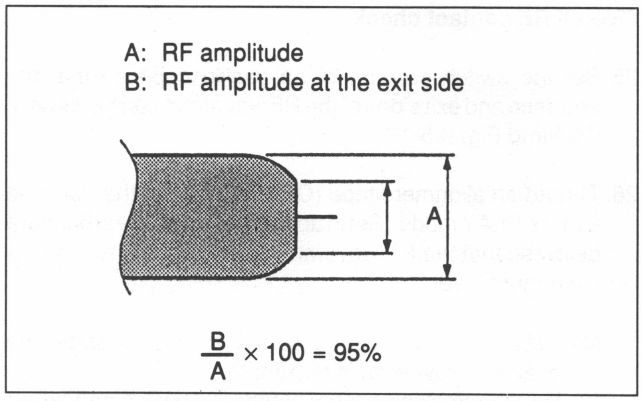

Fig. 8-5-14. Adjust the TG-4 Guide Height

22. Tape path return check at exit side

    (1) Thread an alignment tape (GR2-1) and put the machine into the PLAY mode. Then, push the upper edge of the tape between the TG-3 guide and stationary head downward with a finger tip. (Refer to Fig. 8-5-15.)
    Tape pushing: Push the tape to the extent that the RF waveform at the exit side changes. Notice that excessive tape pushing may damage the tape.

    (2) Release the finger tip from the upper edge of the tape and check that the RF waveform level at the exit side returns to the former level within two seconds.

    <For NG>
    Perform the stationary head perpendicularity check. (Refer to 7-22 STATIONARY HEAD ASS'Y REPLACEMENT.)

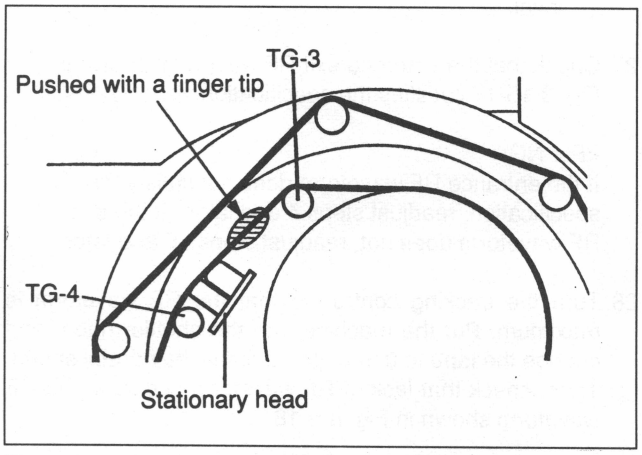

Fig. 8-5-15. Tape Transport Check at Exit Side

23. Put the machine into the PLAY, VAR-1, FF, and REW modes and check that the tape barely curls at all in the TG-3 and TG-4 guides. (Refer to Fig. 8-5-16.)

24. Turn the tracking control and check that the RF waveform at the tape exit side becomes flat. If not, readjust steps 17 and later.

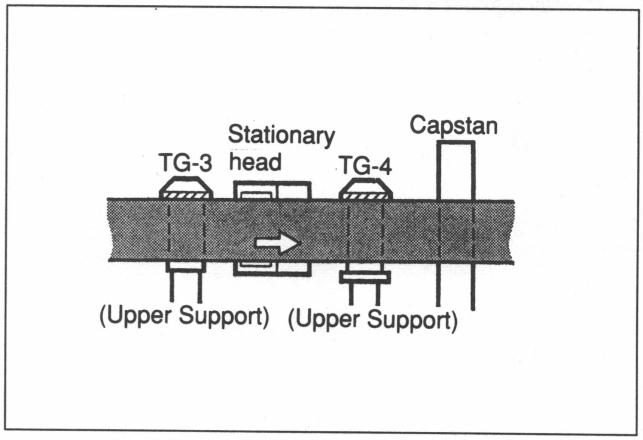

Fig. 8-5-16. After Tape Transport Return at Exit Side

Overall RF contact check

25. Set the switch position of an oscilloscope so that the entrance and exit sides of the RF waveform can be viewed. (Refer to Fig. 8-5-17.)

26. Thread an alignment tape (GR2-1), and put the machine into the PLAY mode. Set in accordance with the procedure below so that the RF waveform amplitude is 80% from its maxi-mum level.

    (1) Turn the tracking control so that the center amplitude of an RF waveform is maximum.
    (2) Turn the tracking control counterclockwise and adjust the RF waveform amplitude to 80% of its maximum level.

27. Check that the entrance/exit RF waveform shown in Fig. 8-15-17 satisfies the specification.

    <For NG>
    If the entrance RF waveform does not satisfy the specification, readjust steps 4 and later. If the exit RF waveform does not, readjust steps 16 and later.

28. Turn the tracking control so that the RF waveform is maximum. Put the machine into the shuttle mode, and change the tape to 0 through ±2 times the normal speed. Then, check that lack of RF waveform occurs in the RF waveform shown in Fig. 8-5-18.

    <For NG>
    Readjust steps 4 and later.

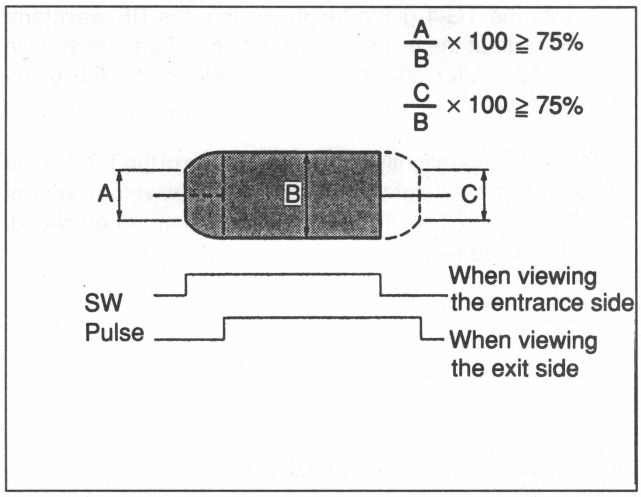

Fig. 8-5-17. Overall RF Contact (1)

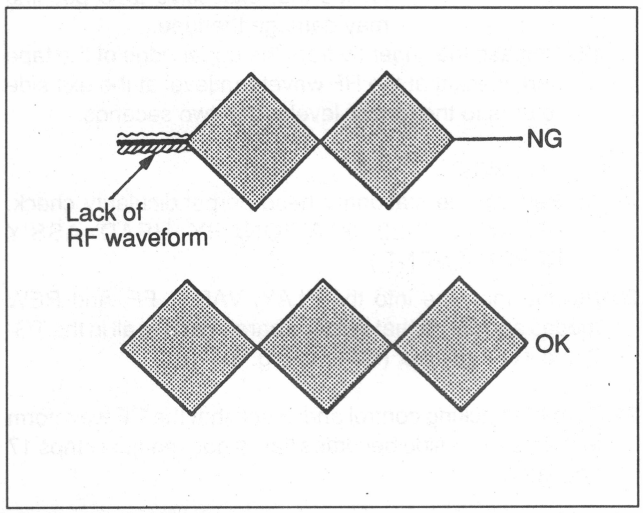

Fig. 8-5-18. Overall RF Contact (2)

8-6. STATIONARY HEAD HEIGHT AND ZENITH CHECKS, AND ADJUSTMENT

Basic Knowledge

A. When the stationary head has been replaced and the TG-3 and TG-4 guide height have been adjusted, perform the stationary head height and zenith checks.

B. The stationary head consists of TC, CTL, and CUE heads. The stationary head height is checked or adjusted in the CTL head playback level. The zenith and azimuth are checked or adjusted in the CUE head playback level.

C. Prepare the following tool for check:
- Alignment tape (Type: GR2-1)
  Sony Part No.: 8-960-040-11

8-6-1. Stationary Head Height and Zenith Checks

Preparation

1. Open the control panel by 90 degrees.

2. Connect TP17 and TP26 on the AE-08 board to CH1 (TP17) and CH2 (TP26) of an oscilloscope. (Refer to Fig. 8-6-1.)

3. Thread an alignment tape (GR2-1) and put the machine into the PLAY mode.

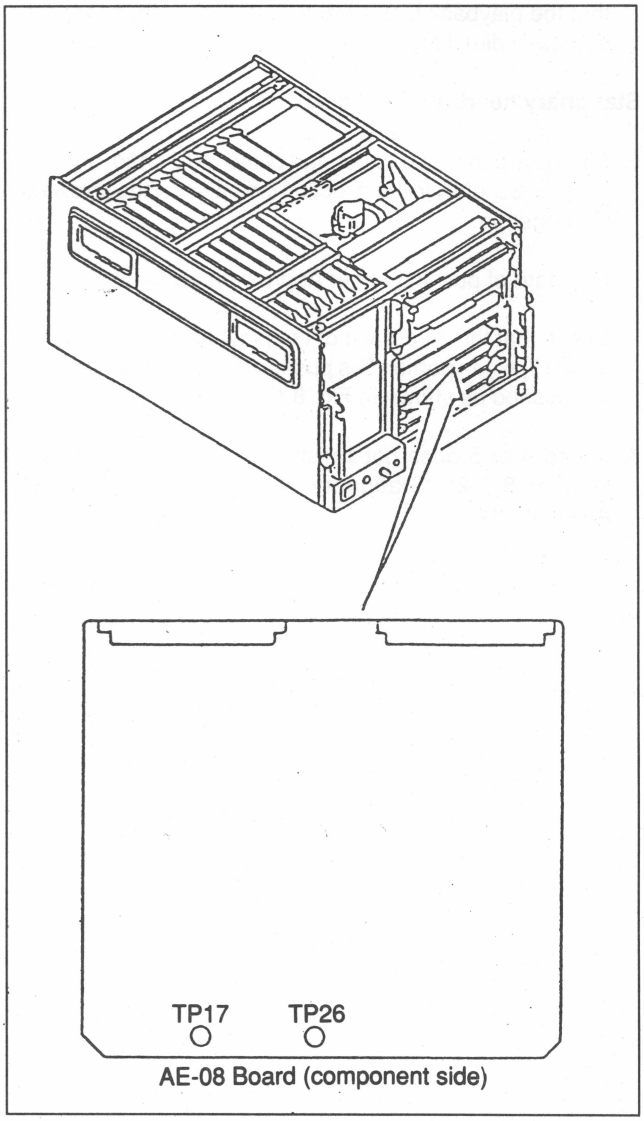

Fig. 8-6-1. Oscilloscope Connection

Stationary head height check

4. Push the upper and lower edges of the tape in position A (between the TG-3 guide and stationary head) shown in Fig. 8-6-2 up or down with a finger tip. In this case, check that the playback CTL level (CH-2: TP26) changes in the decrease direction.

Stationary head zenith check

5. Push position B (the upper part of the CUE head) shown in Fig. 8-6-2 slightly in the direction indicated by the arrow with the finger tip.

   Standard of pushing force: Approximately 30 Gr

   Check that the difference of the playback CUE level (CH-1: TP17) when portion B is pushed with the finger tip and is not pushed as shown in Fig. 8-6-3 is within 10 %.

6. If step 4 or 5 does not satisfy the specification, perform section 8-6-2, "Stationary Head Height and Zenith Adjustments."

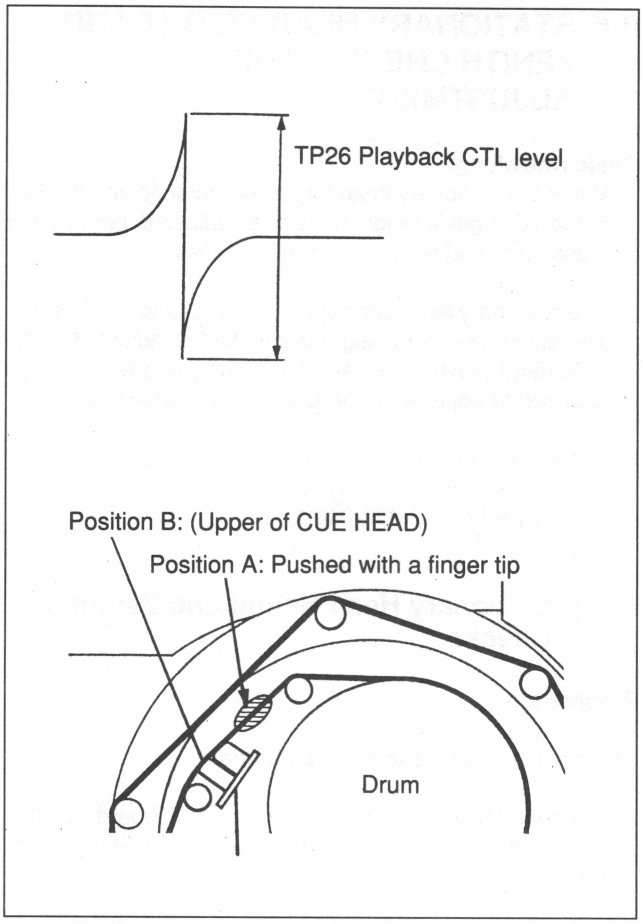

Fig. 8-6-2. Stationary Head Height Check

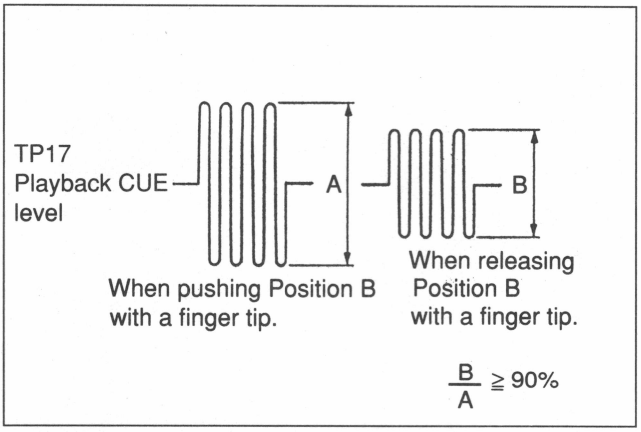

Fig. 8-6-3. Stationary Head Zenith Check

8-6-2. Stationary Head Height and Zenith Adjustments

Preparation

1. Perform steps 1 through 3 of section 8-6-1. Stationary Head Height and Zenith Checks.

Stationary head height adjustment

2. Using a box screwdriver, turn the stationary head height adjustment nut clockwise or counterclockwise so that the playback CTL level (CH-2: TP26) is maximum.

Stationary head zenith adjustment

3. Turn the zenith adjustment screw gradually in the clockwise direction so that the difference of the playback CUE level (CH-1: TP17) when position B (the upper part of the CUE head) shown in Fig. 8-6-4 is pushed in the direction indicated by the arrow and is not pushed is within 10%.

   Note: If the zenith adjustment screw was excessively turned in the clockwise direction, return the screw counterclockwise, then adjust it clockwise again.

4. Put the parallel plate so that it is parallel to the TG-4 guide and stationary head, and check that the zenith of the stationary head satisfies the specification shown in Fig. 8-6-4. If the specification is not satisfied, turn the zenith adjustment screw, then adjust.

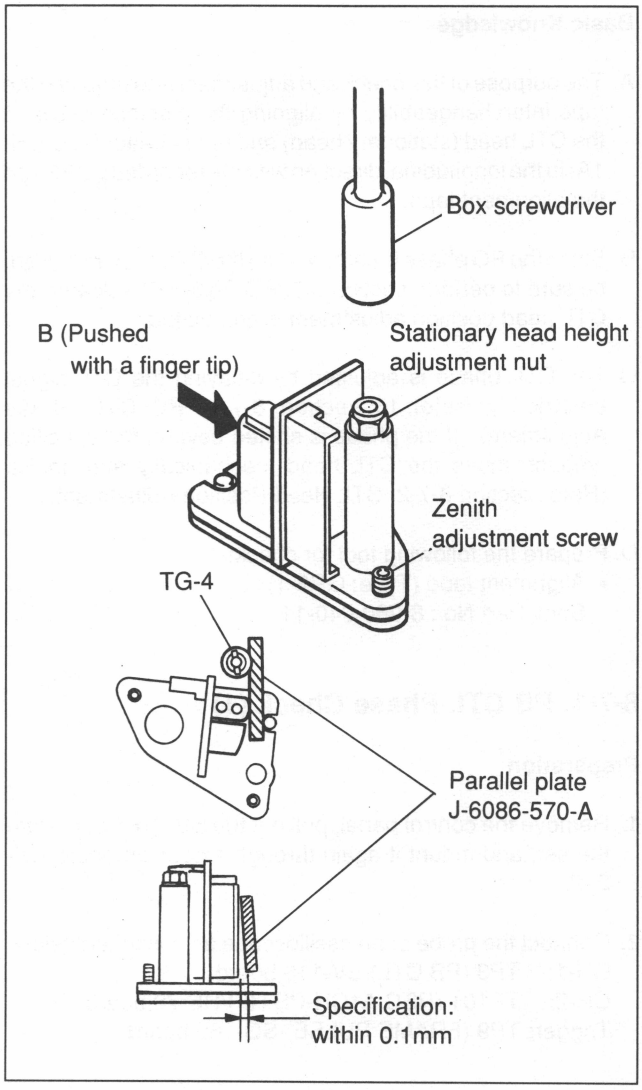

Fig. 8-6-4. Stationary Head Height and Zenith Adjustments

8-7. PB CTL PHASE CHECK AND ADJUSTMENT

Basic Knowledge

A. The purpose of this check and adjustment is to maintain the tape interchangeability by aligning the distance between the CTL head (stationary head) and rotary head (REC CH-1A) in the longitudinal direction with the recorded pattern on the alignment tape.

B. Since the PG phase is shifted when the CTL head is moved, be sure to perform section 8-8. PG Phase Check after the CTL head position adjustment is completed.

C. The CTL phase is adjusted by delaying the CTL signal electrically (refer to section 8-7-4. PB CTL Phase Adjustment). If the phase is shifted beyond the specified amount, move the CTL head mechanically and adjust. (Refer section 8-7-2. CTL Head Position Adjustment.)

D. Prepare the following tool for check:
- Alignment tape (Type: GR2-1)
  Sony Part No.: 8-960-040-11

8-7-1. PB CTL Phase Check (1)

Preparation

1. Remove the control panel, pull out the SV-116 board from the set, and mount it again through extension board EX-212.

2. Connect the probe of an oscilloscope as described below.
   CH-1: TP3 (PB CTL)/SV-116 board
   CH-2: TP101 (REC A1CH-PB RF)/RE-70 board
   Trigger: TP9 (FRAME PULSE)/SG-169 board

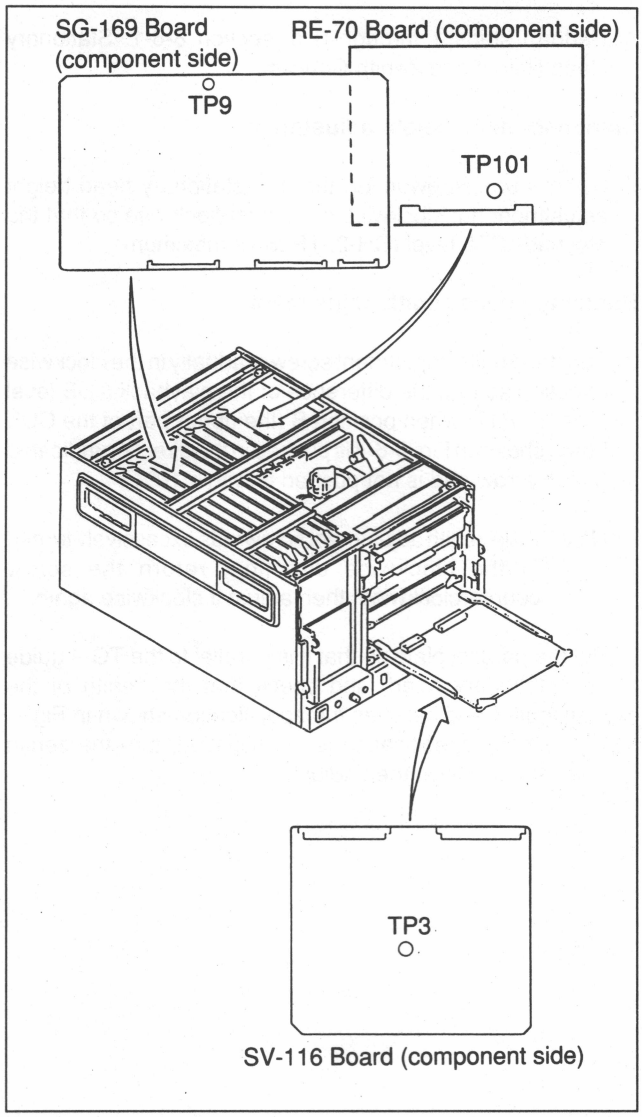

Fig. 8-7-1. Oscilloscope Connection

Check

3. Thread an alignment tape (GR2-1) and put the machine into the PLAY mode.

4. Adjust the tracking control so that the RF waveform of a CH-2 (REC head playback RF) pulse is maximum. (Refer to Fig. 8-7-2.)

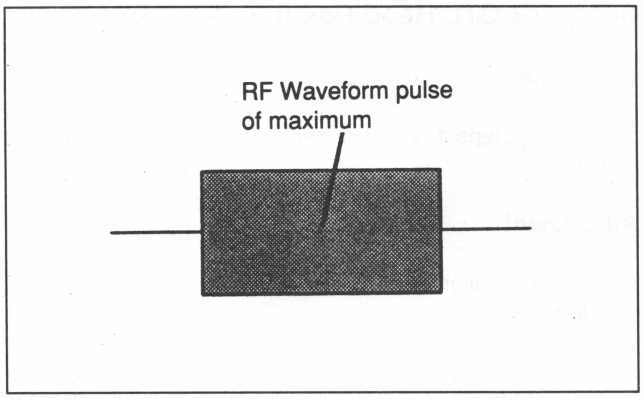

Fig. 8-7-2. REC Head Playback RF Waveform

5. Check that the phase difference at the rising edges of CH-1 (PB CTL) and trigger (FRAME PULSE) pulses satisfies the specification. (Fig. 8-7-3)

   Specification: Within ± 2 msec

   If the specification is not satisfied, perform section 8-7-2. CTL Head Position Adjustment.

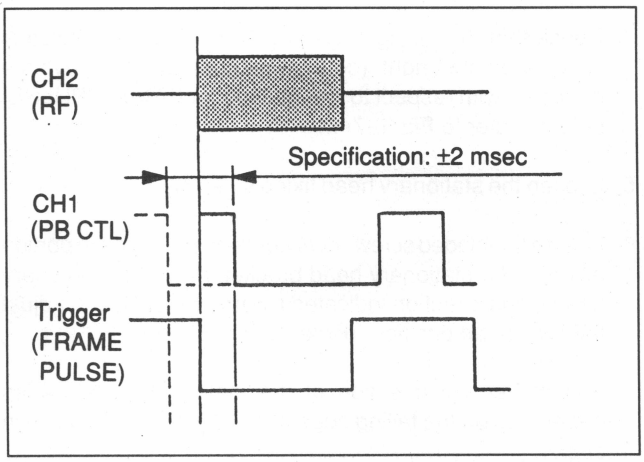

Fig. 8-7-3. PB CTL Phase Check

8-7-2. PB CTL Head Position Adjustment

Preparation

1. Perform steps 1 and 2 of section 8-7-1, "PB CTL Phase Check (1)".

Adjustment

2. Thread an alignment tape (GR2-1) and put the machine into the PLAY mode.

3. Adjust the tracking control so that the RF waveform of a CH-2 (REC head playback RF) pulse is maximum. (Refer to Fig. 8-7-2.)

4. Check that the falling edge of a CH-1 (PB CTL) pulse is located on the right (delay direction) or left (advance direction) with respect to that of a trigger (FRAME PULSE) pulse. (Refer to Fig. 8-7-4.)

5. Loosen the stationary head fixing screw by 1/2 to one turn.

6. Insert a flat-bladed screwdriver between the concave portion and pin of a stationary head bracket, move the stationary head in the direction indicated by arrow A or B, and adjust the CTL head position. (Refer to Fig. 8-7-5.)

   The movement direction of the stationary head varies depending on the falling edge of a CH-1 (PB CTL) pulse in step 4.
   - When the falling edge is located on the right (delay direction)
     Move the stationary head in the direction indicated by arrow A and adjust.
   - When the falling edge is located on the left (advance direction)
     Move the stationary head in the direction indicated by arrow B and adjust.

7. Fix the stationary head fixing screw.

8. Perform the PB CTL head position check again and check that the specification is satisfied.

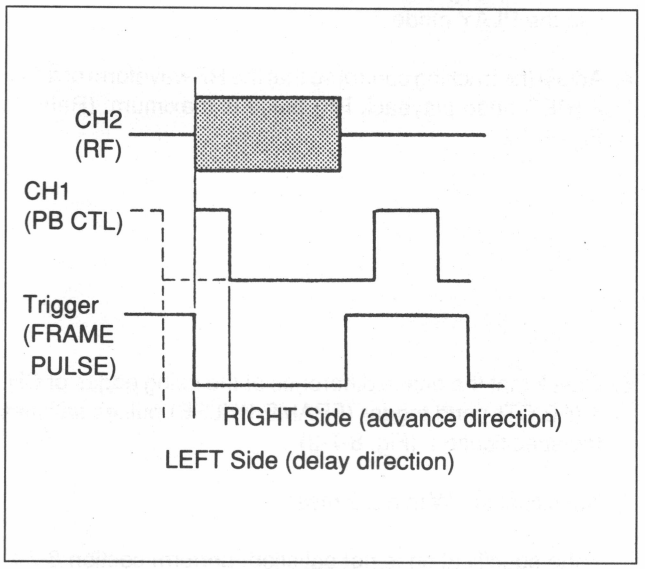

Fig. 8-7-4. PB CTL Timing Check

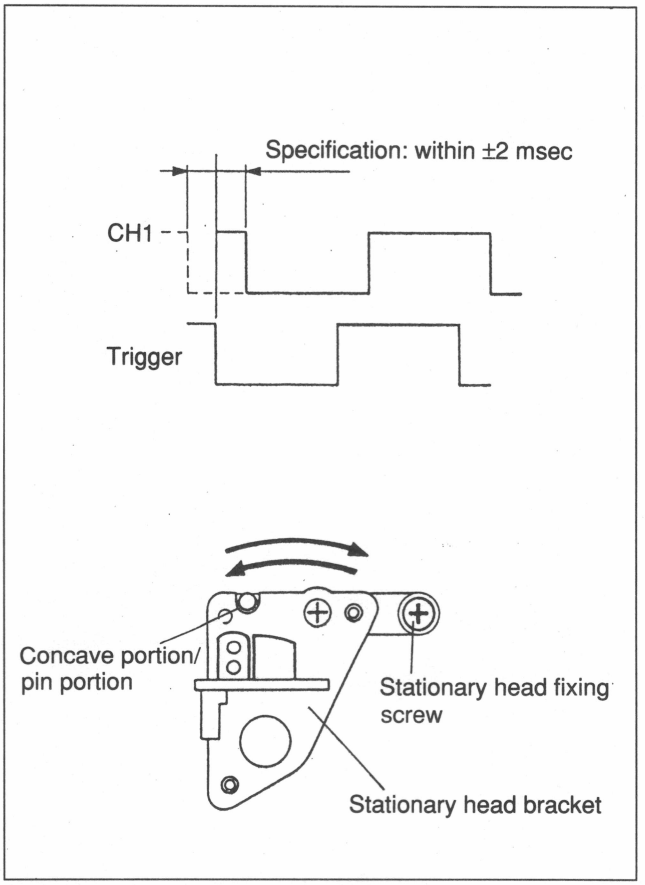

Fig. 8-7-5. CTL Head Position Adjustment

8-7-3. PB CTL Phase Check (2)

Preparation

1. Perform steps 1 and 2 of section 8-7-1. PB CTL Phase Check (1).

Adjustment

2. Thread an alignment tape (GR2-1) and put the machine into the PLAY mode.

3. Adjust the tracking control so that the RF waveform of a CH-2 (REC head playback RF) pulse is maximum. (Refer to Fig. 8-7-2.)

4. Push the tracking control and set it to the FIX position.

5. Check that the RF waveform amplitude level does not change. If it changes, perform section 8-7-4. PB CTL Phase Adjustment.

8-7-4. PB CTL Phase Adjustment

Preparation

1. Perform steps 1 and 2 of section 8-7-1. PB CTL Phase Check (1).

Adjustment

2. Thread an alignment tape (GR2-1) and put the machine into the PLAY mode.

3. Check that the tracking control is in the FIX position. Adjust the key on the control panel so that the RF waveform amplitude level is maximum.
   Note: Check that the CH-1 (PB CTL) and CH-2 (FRAME PULSE) pulses shown in Fig. 8-7-6 are in-phase during adjustment.

   (1) Press the keys [SET UP], [C], [−], and [SET] in the 21-key section to select test mode.
   (2) Press the keys [1], [7], [SET], [+], and [+] to select TTP ADJ, and press the key [SET]. The control panel displays the following message.

```
T*R  XX:XX:XX:XX                    X    X
TTP  ADJ              OOOO  OOOO    OOOO
```

   (3) Pull out the trucking volume, and turn it right and left so that the RF waveform is maximum.
   (4) Then press the keys [C], [6], [8], [SET], and [SET] in this order.
   Put the trucking volume back, and check that the RF waveform is maximum.
   (5) Operate the following keys to write the adjustment value into the NOVRAM.
   [C], [9], [9], [SET]
   The control panel displays the following message.

```
XXXX
DATA  SAVE  OK?
```

   With the key [F] pressed, press the key [IN (white)].
   When the [SET] key is pressed, the control panel displays the following message.

```
XXXX
DATA  SAVED
```

4. When not operating the adjustment at TTP ADJ mode at a time, turn the power off and on to set normal mode.

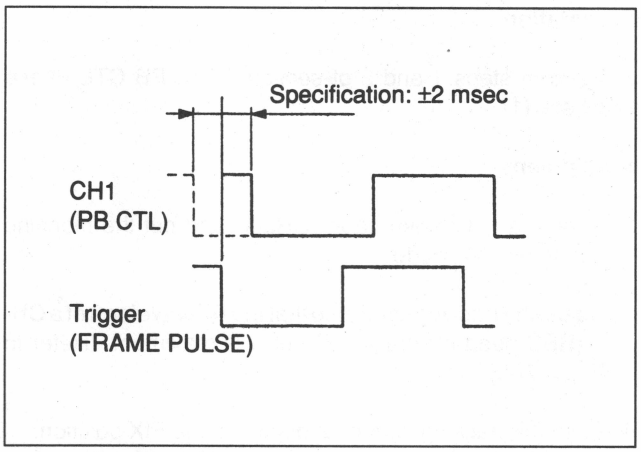

Fig. 8-7-6. PB CTL Phase Check

5. Check that the phase difference at the falling edges of CH-1 (PB CTL) and trigger (FRAME PULSE) pulses shown in Fig. 8-7-6 satisfies the specification with the tracking control pushed (FIX position).

   Specification: Phase difference within ±2 msec

   If the specification is not satisfied, perform section 8-7-2. PB CTL Position Adjustment again.

8-8. PG PHASE CHECK AND ADJUSTMENT

Basic Knowledge

A. The purpose of this check and adjustment is to maintain the tape interchangeability by aligning the phase of the video head in the track direction with the recorded pattern on the alignment tape.

B. This adjustment must be performed when section 8-7. PB CTL Phase Adjustment is performed. Section 8-7. PB CTL Phase Check must also be performed when this adjustment is performed.

C. Prepare the following tool for check and adjustment:
- Alignment tape (Type: GR2-1)
  Sony Part No.: 8-960-040-11

8-8-1. PB Phase Check

Preparation

1. Connect the probe of an oscilloscope as described below.
   CH-1: TP19 (SW PULSE)/SG-169 board
   CH-2: TP18 (SW PG)/SG-169 board
   Trigger: CH-2

   Note: The probe connection of an oscilloscope varies depending on the machine with serial numbers 10001 through 10199.
   - CH-1 connection
     Mount extension board EX-211 on the SG-169 board and connect CH-1 to TP-C18 (test point of extension board EX-211).
   - CH-2 connection
     Connect CH-2 to 19 pin of IC-A4 on the SG-169 board.

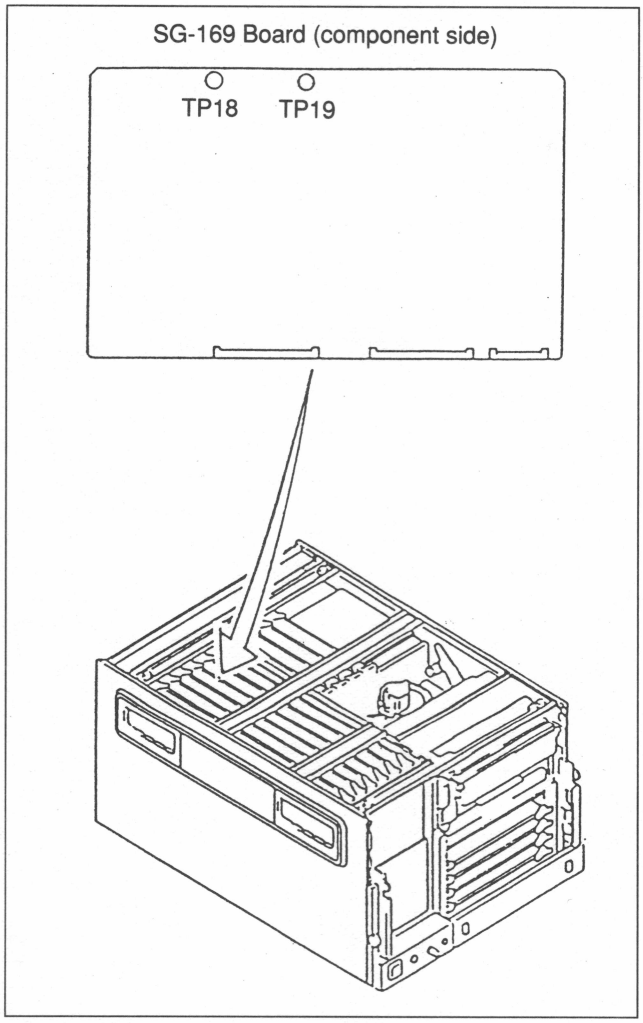

Fig. 8-8-1. Oscilloscope Connection

Adjustment

2. Check that the rising edge of a CH-1 (SW PULSE) pulse shown in Fig. 8-8-2 is located on the left (direction A) with respect to the center of the CH-2 (SW PG) pulse width.

   If not, tentatively adjust so that the rising edge of the CH-1 (SW PULSE) pulse is located on the left referring to section 8-9-2. PB SW Phase Adjustment.

3. Select the CH-1 (probe) connection to TP4 on the DM-77 (A) board.

4. Thread an alignment tape (GR2-1) and put the machine into the PLAY mode.

5. Check that the phase difference of CH-1 (PB RF) and CH-2 (SW PG) pulses shown in Fig. 8-8-3 satisfies the specification. If the specification is not satisfied, perform section 8-8-2. PG Phase Adjustment.

   Specification: Phase difference within ± 5 µsec

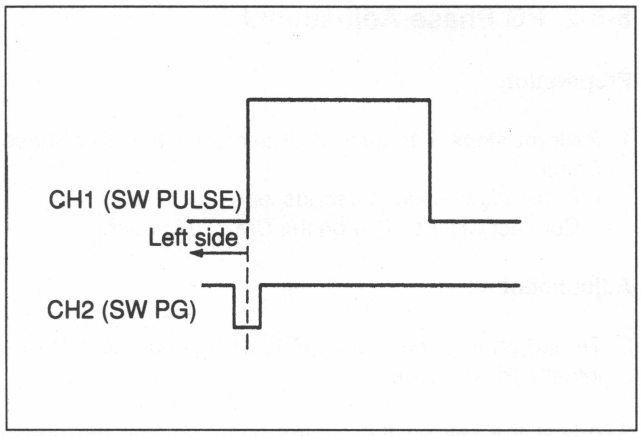

Fig. 8-8-2. PG Phase Check (1)

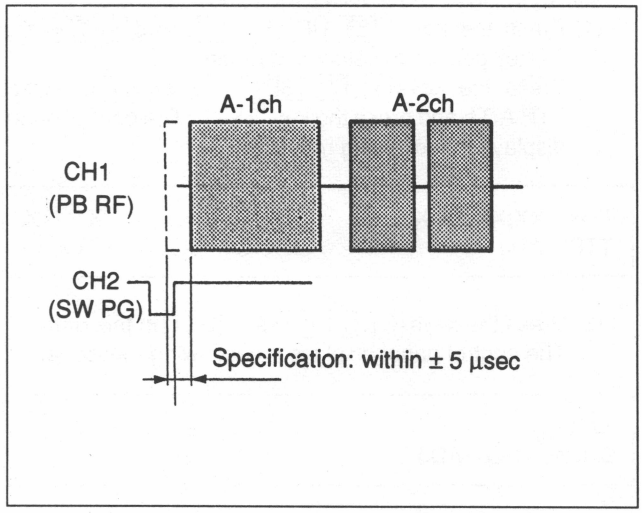

Fig. 8-8-3. PG Phase Check (2)

8-8-2. PG Phase Adjustment

Preparation

1. Perform steps 1 through 3 of section 8-8-1. PG Phase Check.
   - Probe connection of oscilloscope
     Connect CH-1 to TP4 on the DM-77 (A) board.

Adjustment

2. Thread an alignment tape (GR2-1) and put the machine into the PLAY mode.

3. Adjust the key on the control panel so that the phase difference of CH-1 (SW PULSE) and CH-2 (SW PG) pulses shown in Fig. 8-8-3 satisfies the specification.
   (1) Press the keys [SET UP], [C], [−], and [SET] in the 21-key section to select test mode.
   (2) Press the keys [1], [7], [SET], [+], and [+] to select TTP ADJ, and press the key [SET]. The control panel displays the following message.

```
T*R  XX:XX:XX:XX                    X    X
TTP  ADJ              OOOO  OOOO    OOOO
```

   (3) Press the keys [C], [7], [3], and [SET] in this order. The control panel displays the following message.

```
XXXX
DRUM  PG  ADJ
```

   (4) Adjust the phase to the specified level, using the keys [+] and [−]. (If a fine adjustment is necessary, use the keys [+] and [−] while the key [F] is kept pressed.)
   When the requirement is met, press the key [SET].
   Specification : Phase difference must be within ± 3 sec.
   (5) Operate the following keys to write the adjustment value into the NOVRAM.
   [C], [9], [9], [SET]
   The control panel displays the following message.

```
XXXX
DATA  SAVE  OK?
```

   With the key [F] pressed, press the key [IN (white)].
   When the key [SET] is pressed, the control panel displays the following message.

```
XXXX
DATA  SAVED
```

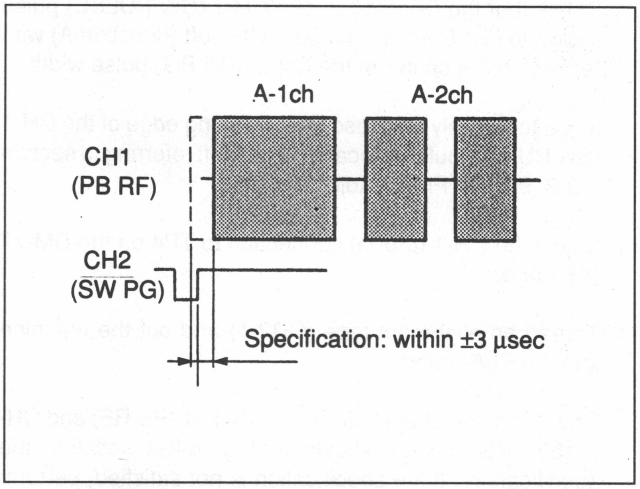

Fig. 8-8-4. PG Phase Adjustment

8-9. PB SW PHASE CHECK AND ADJUSTMENT

Basic Knowledge

8-9-1. PB SW Phase Check

Preparation

1. Connect the probe of an oscilloscope as described below.
   CH-1: TP19 (SW PULSE)/SG-169 board
   CH-2: TP18 (SW PG)/SG-169 board
   Trigger: CH-2

   Note: The CH-1 and CH-2 connections of an oscilloscope vary depending on the machine with serial numbers 10001 through 10199.
   - CH-1 connection
     Mount extension board EX-211 on the SG-169 board and connect CH-1 to TP-C18 (test point of extension board EX-211).
   - CH-2 connection
     Connect CH-2 to pin 19 of ICA4 on the SG-169 board.

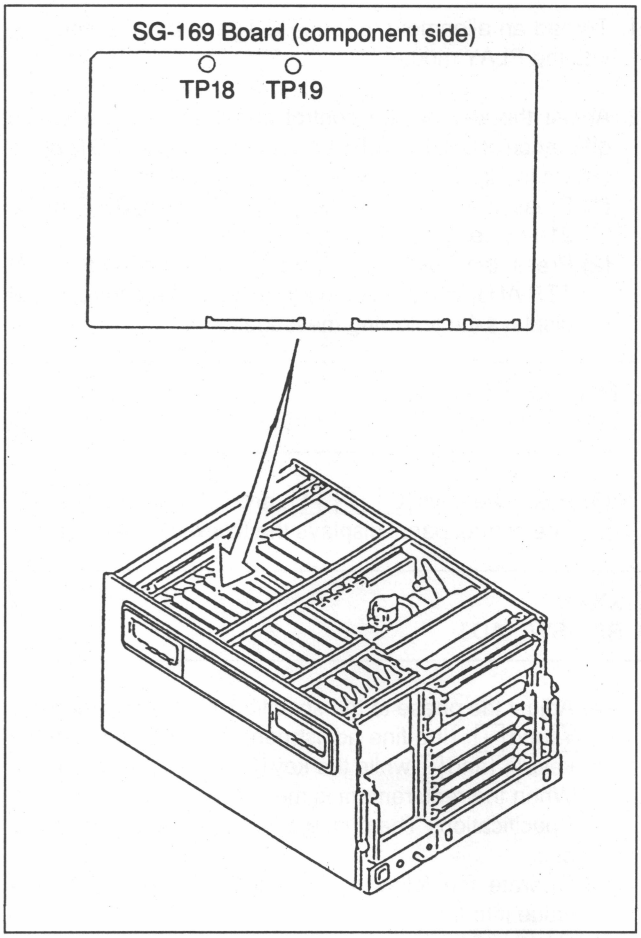

Fig. 8-9-1. Oscilloscope Connection

Check

2. Thread an alignment tape (GR2-1) and put the machine into the PLAY mode.

3. Check that the phase difference at the rising and falling edges of CH-1 (SW PULSE) and CH-2 (SW PG) pulses shown in Fig. 8-9-2 satisfies the specification. If the specification is not satisfied, perform section 8-9-2. PB SW Phase Adjustment.

   Specification: Phase difference within ± 5 µsec

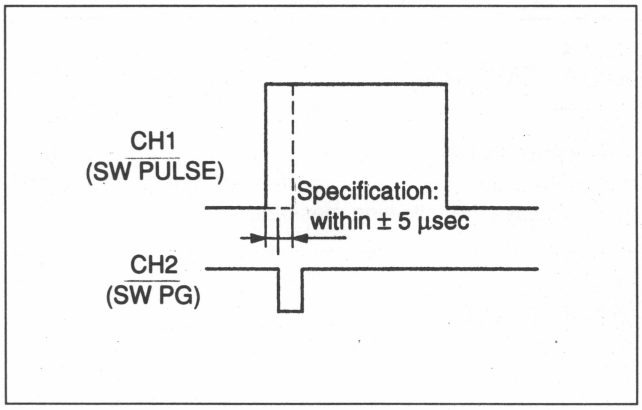

Fig. 8-9-2. PB SW Phase Adjustment

8-9-2. PB SW Phase Adjustment

Adjustment

1. Thread an alignment tape (GR2-1) and put the machine into the PLAY mode.

2. Adjust the key on the control panel so that the phase difference of CH-1 (SW PULSE) and CH-2 (SW PG) pulses shown in Fig. 8-9-2 satisfies the specification.
   (1) Press the keys [SET UP], [C], [−], and [SET] in the 21-key section to select test mode.
   (2) Press the keys [1], [7], [SET], [+], and [+] to select TTP ADJ, and press the key [SET]. The control panel displays the following message.

```
T*R  XX:XX:XX:XX                X    X
TTP  ADJ              OOOO  OOOO  OOOO
```

   (3) Press the keys [C], [7], [4], and [SET] in this order. The control panel displays the following message.

```
XXXX
RF  SW  ADJ
```

   (4) Adjust the phase to the specified level, using the keys [+] and [−]. (If a fine adjustment is necessary, use the keys [+] and [−] while the key [F] is kept pressed.) When the requirement is met, press the key [SET]. Specification : The phase difference must be within 3 sec.
   (5) Operate the following keys to write the adjustment value into the NOVRAM.
   [C], [9], [9], [SET]
   The control panel displays the following message.

```
XXXX
DATA  SAVE  OK?
```

   With the key [F] pressed, press the key [IN (white)]. When the key [SET] is pressed, the control panel displays the following message.

```
XXXX
DATA  SAVED
```

8-10. SELF-RECORD/PLAYBACK WAVEFORM CHECK

Basic Knowledge

A. The tape-to-rotary head contact condition can be checked by observing the self-record/playback RF waveform.

B. Prepare the following tool for check:
- Blank tape (1/2 inch metal coating UNIHI type)

Preparation

1. Connect the probe of an oscilloscope as described below.
   CH-1: TP4 (PROC)/DM-77 (A) board
   CH-2: TP4 (PROC)/DM-77 (B) board
   Trigger: CH-2 (FRAME PULSE)/SG-169 board

2. Thread a blank tape and record video and audio signals. The test signal contained in this machine can be used as an input signal.

   Put the machine into the test mode and select the signals below.
   - Video signal
     Select a color-bar (CB) signal from the "T20 video test signal generator".
   - Audio signal
     Select a 3.0 kHz signal from the "T22 audio test signal generator".

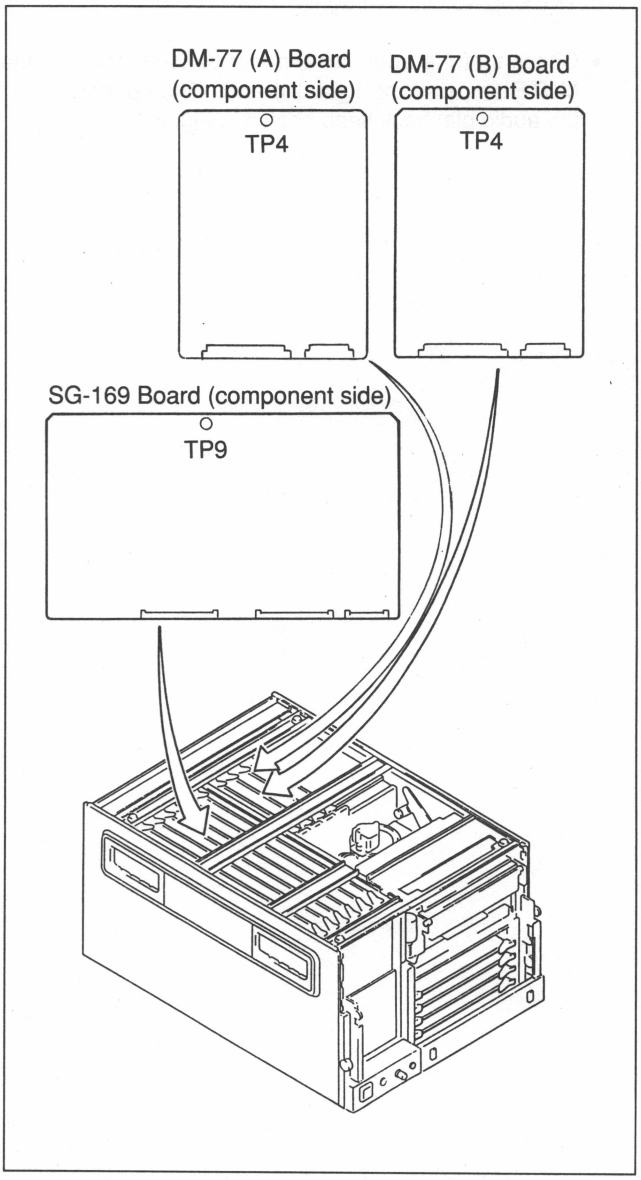

Fig. 8-11-1. Oscilloscope Connection

Check

3. Play back the recorded portion. (Refer to Fig. 8-10-2.)

4. Check that the RF waveform shown in Fig. 8-10-3 satisfies the specification.
   - Check all the A1, A2, B1, and B2 channels shown in Fig. 8-10-2.

     If the specification is not satisfied, perform section 8-5-2, Tracking Adjustment again.

   - Check that the audio level meter deflects and that the MUTE lamp does not light. If the MUTE lamp lights, clean the audio playback head shown in Fig. 8-10-4.

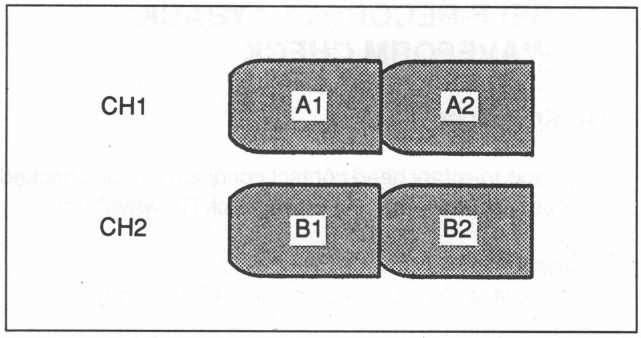

Fig. 8-10-2 Self Recording/Playback Waveform Check (1)

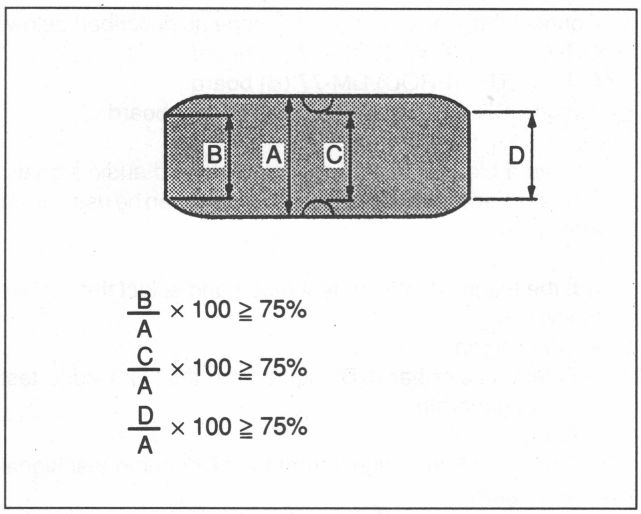

Fig. 8-10-3 Self Recording/Playback Waveform Check (2)

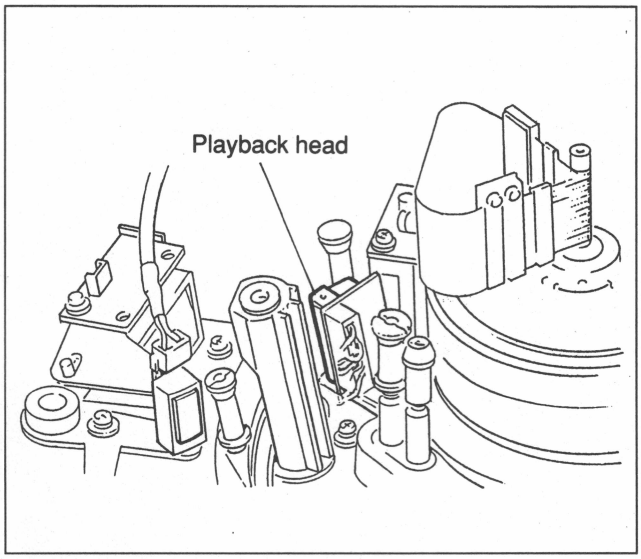

Fig. 8-10-4 Audio Playback Head Cleaning

5. Put the machine into the shuttle mode shown in Fig. 8-10-5, play back the RF waveform at 0 through ±2 times the normal speed, and check that there is lack of RF waveform in the RF waveform.
   - Check all the A1, A2, B1, and B2 channels shown in Fig. 8-10-2.

   If the specification is not satisfied, perform section 8-5-2, Tracking Adjustment again.

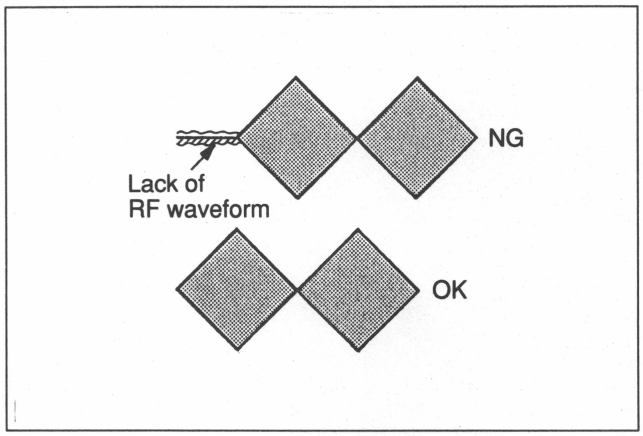

Fig. 8-10-5 Lack of RF Waveform Check

SECTION 9
GENERAL INFORMATION FOR ELECTRICAL ALIGNMENT

9-1. ADJUSTMENT COMPONENTS INDEX

The list below shows all the adjustments for each printed board together with the relevant section references.

ADA-14 board

RV101 16-4
RV201 16-4
RV301 16-4
RV401 16-4
RV501 16-3
RV502 16-3
RV551 16-3
RV552 16-3
RV601 16-3
RV602 16-3
RV651 16-3
RV652 16-3
RV701 16-3
RV702 16-3
RV751 16-3
RV752 16-3

AE-08 board

RV1 13-5
RV2 13-5,6
RV3 13-3
RV4 13-8
RV5 13-10,12
RV6 13-13
RV7 13-13
RV8 13-8
RV9 (10001 through 10199) 13-9
RV10 13-9,10,11
RV11 13-7
RV12 13-12
RV13 13-14
RV14 13-14
RV15 13-9,11
RV16 13-7
RV17 (10201 and higher) 13-14
LV1 13-3,4
LV2 13-5
LV3 13-6
LV4 13-3
LV5 13-10
LV6 13-9
LV7 13-9

DEC-50 board

LV1 16-5
LV2 16-5

DET-3 board

RV1 11-2
RV2 11-2

DM-77 board

RV1 14-6
RV2 14-6

RV3 14-5,7
RV4 14-4
RV5 14-5
RV6 14-7
RV103 15-28,29
RV104 14-18
RV301 14-8

CV1 ..... 14-19, 20
CV301 14-21

IO-44 board

RV1 15-40
RV2 15-40
RV3 15-41
RV4 15-41
RV5 15-42
RV6 15-42
RV7 15-43

IO-53 board

RV1 15-45

IPR-1 board

RV101 15-23
RV103 15-22
RV201 15-24
RV202 15-22
RV301 15-24
RV302 15-22
RV401 15-20
RV402 15-21
RV501 15-20
RV502 15-21
RV601 15-63
RV602 15-62

DL1 15-61

IV-23 board

RV1 15-13
RV2 15-16
RV4 15-16
RV5 15-12
RV6 15-12
RV7 15-12
RV8 15-15
RV9 15-14
RV10 15-15
RV11 15-14
RV12 15-15
RV13 15-11
RV14 15-11
RV15 15-11
RV201 15-13
RV203 15-18
RV204 15-17
RV301 15-13
RV303 15-18
RV304 15-17

KC-14 board

RV101 11-2

MD-65 board

RV101 14-15,15-25
RV102 15-26
RV105 15-27
RV107 14-15
RV201 15-25
RV202 15-26
RV205 15-27
RV207 14-15
RV301 14-15
RV302 14-15

PC-56 board

RV1 10-7
RV2 10-7

PC-57 board

RV1 10-7
RV2 10-7
RV3 10-7

PC-187 board

RV1 10-6

RE-70 board

RV1 14-13,14
RV2 14-13,14
RV101 14-17
RV102 14-15
RV201 14-17
RV202 14-15
RV301 14-17
RV302 14-15
RV401 14-17
RV402 14-15

CV1 14-10,11
CV2 14-10,11

SG-169 board

RV1 15-58
RV2 15-58
RV3 15-52,53
RV4 15-56,57
RV5 15-52,53
RV6 15-55
RV8 15-8
RV9 15-8
RV10 15-59
RV11 15-46

LV1 15-10
LV2 15-44
LV3 15-9
LV4 15-9
LV5 15-10

SMB-8 board

RV1 15-37
RV2 15-31
RV3 15-31
RV101 15-36
RV102 15-36
RV104 15-35
RV105 15-36
RV201 15-38
RV202 15-38
RV204 15-35
RV205 15-38
RV301 15-39
RV302 15-39
RV304 15-35
RV305 15-39

TBC-14 board

RV102 15-49
RV202 15-49

LV101 15-47
LV201 15-47,48
LV202 15-48

T101 15-47
T102 15-47
T201 15-48
T202 15-48

TBC-15 board

RV1 15-32
RV2 15-32
RV3 15-33
RV4 15-33
RV5 15-34
RV6 15-34
RV7 15-50
RV8 15-30
RV9 15-50
RV10 15-50

9-2. EQUIPMENT REQUIRED

9-2-1. Tools

1. Extension board
   One each is provided to the HDV-10.
   Sony Part No.
   EX-211 A-6026-144-A
   EX-212 A-6026-145-A
   EX-213 A-6026-146-A
2. IO board extension board
   Used for IO-44 and IO-53 boards.
   Sony Part No. J-6268-100-A
3. ROVING DAC
   Sony Part No. J-6263-470-A
4. IC test grip
   Sony Part No.
   TC-16 J-6041-770-A
   TC-20 J-6041-780-A
5. PLCC IC sampling jig
   Sony Part No. J-6035-070-A
6. Adjustment screwdriver 1.3 mm (ceramic)
   Sony Part No. 7-721-052-81
7. Alignment tape
   Sony Parts No.
   GR5-1 8-960-040-01 (for Electrical Alignment)
   GR2-1 8-960-040-11 (for Mechanical Alignment)

9-2-2. Measuring Instruments

1. Oscilloscope
   equipment product: Sony Techtronix 2445 or 2465
   Frequency band: 150 MHz and above.
2. HD picture monitor
   equipment product: Sony HDM-1220
3. Audio signal generator/Analyzer
   equipment product: Sony Techtronix/TM5006 and the following plug-in units
   SG5010 OSCILLATOR
   AA5001 ANALYZER
4. HD video signal generator
   It generates a 1125 line/60 Hz video signal conforming to BTA-S001 or SMPTE240B.
   equipment product: Shibasoku /TG 91C6 and Sony Techtronix/TSG-1125
5. Digital voltmeter
   equipment product: Hewlett Packard/3425A
   Valid number of digits: 5 and above
   Precision: 0.02 %, ±1 count and below
6. Frequency counter
   equipment product: Hewlett Packard/5313
7. Waveform monitor
   equipment product: Sony Techtronix/1730HD
   (Convenient if it is able to be used)
8. Spectrum analyzer
   equipment product: Hewlett Packard/141T
   (If this is not able to be used, do not adjust.)
9. Slidac
   equipment product: Matsunaga/SD-2410B
   Input/output voltage: 0 to 240 V AC
   Current-carrying capacity: 2 kVA/10A
   Used for power supply alignment.
   (If this is not able to be used, do not adjust.)
10. Tentero meter
    T2-H7-CB USA/Tentel Co.
    (Measures FWD back tension.)

    Tentel/Tentero meter are registered trademarks and products of the Tentel Co. of the USA.

9-3. TEST SIGNALS

This is an 1125 line/60Hz HD video signal that conforms to BTA-S001 and SMPTE 240B.
From the test mode menu the built-in signal generator can be activated.

MENU No.	MENU	ITEM	CONTENTS
T20	VIDEO TEST SG	OFF	
		CB	CB: Color Bar Signal
		MB	MB: Multi Burst Signal
		LINEAR	LINEAR: Linearity Signal
T22	AUDIO TEST SG	OFF	It is possible to select the four levels 0, +2, +4 and +6dBm.
		400Hz	400Hz: 400Hz Single Tone
		1kHz	1kHz: 1kHz Single Tone
		3kHz	3kHz: 3kHz Single Tone

1. COLOR BARS Y

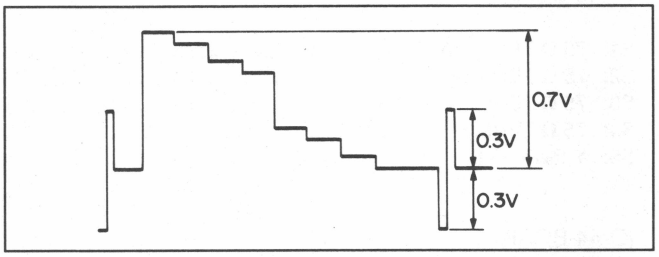

2. COLOR BARS P_B

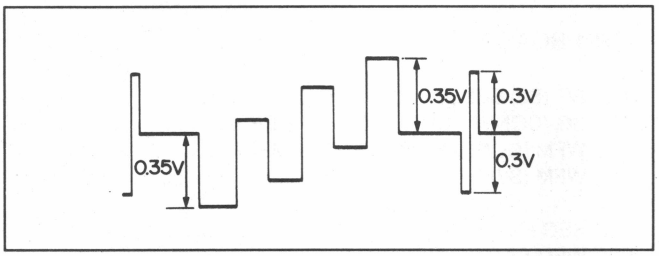

3. COLOR BARS P_R

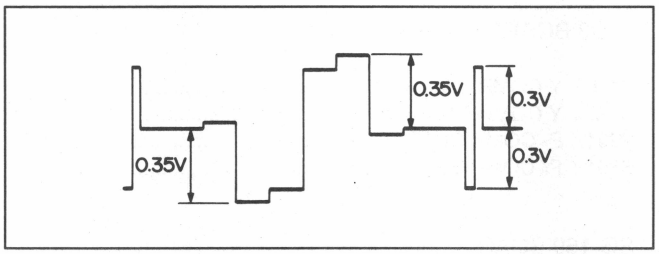

4. LINEARITY RAMP

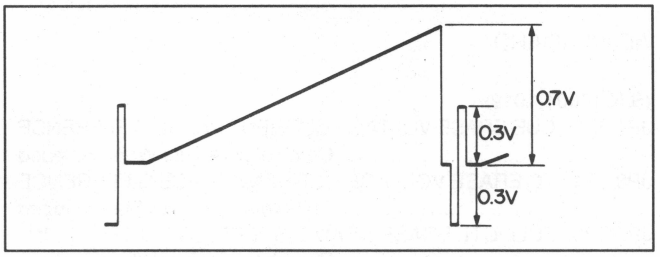

5. MULTIBURST

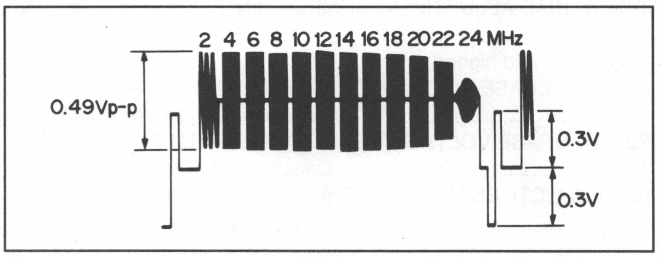

9-4. SWITCHES/JUMPERS INITIALIZATION SETTING

ADA-14 BOARD

JP101: DA1-DA4 INPUT IMPEDANCE SETTING ..... SHORT
JP102: DA1-DA4 INPUT IMPEDANCE SETTING ..... OPEN
JP103: DA1-DA4 INPUT IMPEDANCE SETTING ..... OPEN
JP201: DA1-DA4 INPUT IMPEDANCE SETTING ..... SHORT
JP202: DA1-DA4 INPUT IMPEDANCE SETTING ..... OPEN
JP203: DA1-DA4 INPUT IMPEDANCE SETTING ..... OPEN
JP301: DA1-DA4 INPUT IMPEDANCE SETTING ..... SHORT
JP302: DA1-DA4 INPUT IMPEDANCE SETTING ..... OPEN
JP303: DA1-DA4 INPUT IMPEDANCE SETTING ..... OPEN
JP401: DA1-DA4 INPUT IMPEDANCE SETTING ..... SHORT
JP402: DA1-DA4 INPUT IMPEDANCE SETTING ..... OPEN
JP403: DA1-DA4 INPUT IMPEDANCE SETTING ..... OPEN

S1: TEST SW ..... OFF

AE-08 BOARD

(S/N 10001-10199)
JP1/JP2: CUE ERASE VOLTAGE/CURRENT PHASE DIFFERENCE
..... Completely Adjust When Shipped
JP3/JP4: TC ERASE VOLTAGE/CURRENT PHASE DIFFERENCE
..... Completely Adjust When Shipped
JP5/JP6: FULL/CTL ERASE HEAD DISPERSION CORRECTION
..... Completely Adjust When Shipped
JP1: CUE BIAS ADJUSTMENT JUMPER PIN ..... IN
JP2: CTL BIAS ADJUSTMENT JUMPER PIN ..... IN
JP3: TC BIAS ADJUSTMENT JUMPER PIN ..... IN

(S/N 10201 and higher)
S1: CUE ERASE VOLTAGE/CURRENT PHASE DIFFERENCE
..... Completely Adjust When Shipped
S2: TC ERASE VOLTAGE/CURRENT PHASE DIFFERENCE
..... Completely Adjust When Shipped
S3: FULL/CTL ERASE HEAD DISPERSION CORRECTION
..... Completely Adjust When Shipped

S4: CUE BIAS ADJUSTMENT SWITCH ..... ON
S5: CTL BIAS ADJUSTMENT SWITCH ..... ON
S6: TC BIAS ADJUSTMENT SWITCH ..... ON

DEC-50 BOARD

S1-1, 3, 4, 5, 7, 8 : CORRECTION MODE SELECT SW ..... ON
S1-2, 6 : CORRECTION MODE SELECT SW ..... OFF
S1-1, 3, 5, 6, 7 : CORRECTION MODE SELECT SW ..... ON
S2-2, 4, 8 : CORRECTION MODE SELECT SW ..... OFF
S3 : TEST SW ..... OFF

DM-77 BOARD

JP8 ..... SHORT (Insert the JP)
JP9 ..... OPEN (Pull out the JP)
JP11 ..... SHORT (Insert the JP)
JP12 ..... OPEN (Pull out the JP)

ED-23 BOARD

S1-1 : FIELD FREQUENCY ON/OFF SWITCH ..... OFF
S1-2 to S1-4 : FACTORY USE ..... OFF

ENC-12 BOARD

S1: TEST SW ..... OFF

IF 241 BOARD

S1: FACTRY USE

IO-43 BOARD

S1: 75 Ω TERMINATER SW ..... ON
S2: 75 Ω TERMINATER SW ..... ON
S3: 75 Ω TERMINATER SW ..... ON
S4: 75 Ω TERMINATER SW ..... ON
S5: Y/P_B/P_R, G/B/R SELECT SW ..... Y/P_B/P_R

IO-44 BOARD

S1: Y/P_B/P_R, G/B/R SELECT SW ..... Y/P_B/P_R

IPR-1 BOARD

J1: SG (S3) SELECT JUMPER ..... OPEN
J2: SG (CONPANE) SELECT JUMPER ..... SHORT
J3: WFM (CONPANE) SELECT JUMPER ..... SHORT
J4: WFM (S2) SELECT JUMPER ..... OPEN

S1: SEG H RST SIFHTER SW 1
S2: WFM SELECT SW 7
S3: TEST SG SELECT SW 2

IV-23 BOARD

S1-1 : Y COMP ON/ OFF SW ..... OFF
S1-2 : Y COMP ON/ OFF SW ..... ON
S201 : P_B COMP ON/ OFF SW ..... OFF
S301 : P_R COMP ON/ OFF SW ..... OFF

SG-169 BOARD

JP1 : C PHASE ADJUSTMENT JUMPER PIN
..... Completely Adjust When Shipped
JP2 : Y PHASE ADJUSTMENT JUMPER PIN
..... Completely Adjust When Shipped

SV-116 BOARD

SW1 : CPU RESET SW

SY-144 BOARD

S1: RESET SW ..... OFF
S3: TEST SW ..... OFF
S4: TEST SW ..... OFF

TBC-14 BOARD

S401: CH-B LEVEL TRIM ENABLE SW ..... OFF

TBC-15 BOARD

JP1: B DL JUMPER ..... Completely Adjust When Shipped
JP7: WFM JUMPER ..... SHORT
JP8: SELF WFM JUMPER ..... OPEN

S1: WFM SELF SELECT SW 0

9-5. WAY OF INSCRIBING ELECTRIC ADJUSTMENT PARTS NOTATION

The meaning of references such as "RV1 /PS-187(E3)" in this manual is as follows:
RV1 → Reference number
PS-187 → Board name
E3 → Location mounted circuit board

SECTION 10
POWER SUPPLY ALIGNMENT

[Caution 1]

Each board of the power supply block contains the primary circuit and high voltage section. Take strict caution against electric shocks. Read Section 2-9 Notes on power unit when handling the power supply block before you begin inspections and adjustments.

[Caution 2]

The heat sinks on each board have a thermal capacity on the assumption that they are air-cooled by the fan. Avoid applying load to the board for an extended period of time during inspection when the fan is not operating.

10-1. CONFIGURATION OF THE POWER SUPPLY BLOCK

- The power supply block of HDV-10 consists of the three main parts as shown below.

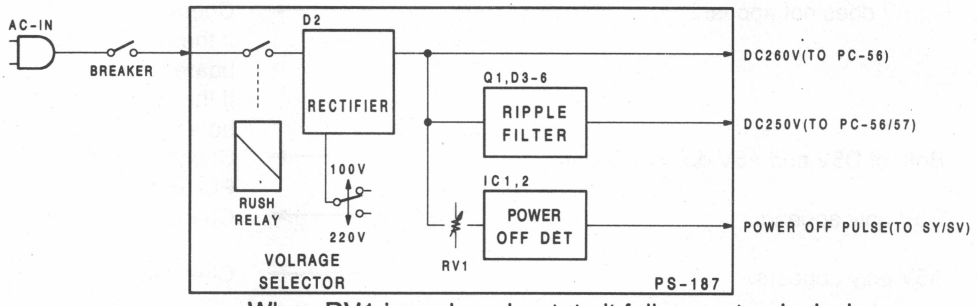

When RV1 is replaced, rotate it fully counterclockwise before adjusting it.

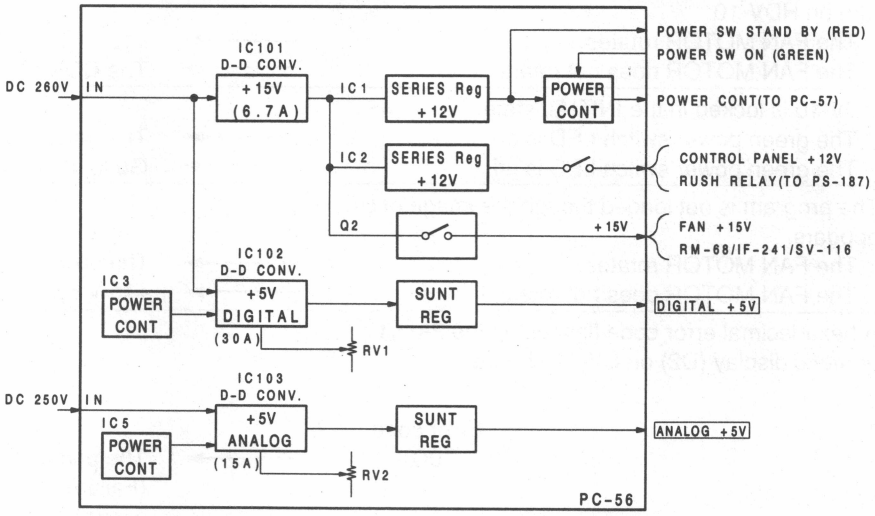

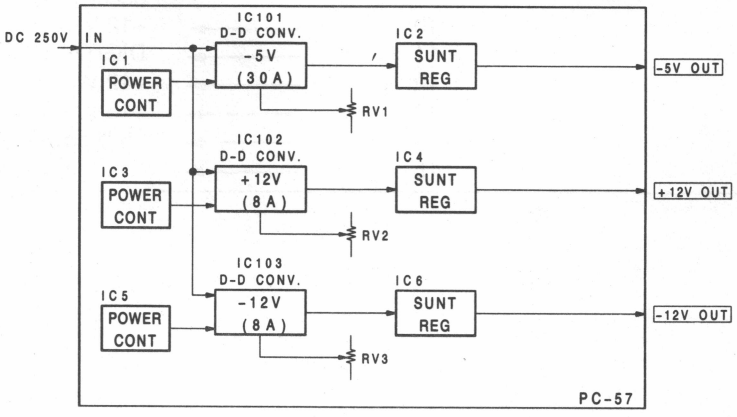

10-2. TROUBLESHOOTING

The following table lists symptoms observed at the time of possible failures of HDV-10 and sections to be inspected.
If the power output has stopped, turn off the power switch on the front panel and turn it on again after a few seconds.

D5V : DIGITAL +5V
A5V : ANALOG +5V

No	Sympton	→	Check point
1	When HDV-10 is on standby: MAIN SW(BREADER): ON REMOTE POWER SW: OFF The red power switch LED does not go on.	→	• Check to see if temperature fuse F1 has blown on PS-187 board. • Reg for +15 V on PC-56 board (IC101 or IC1)
2	The green LED does not go on when you turn on the power switch.		
	+12 V does not appear.	→	Check to see if –12 V and –5 V appear. If they do, +12V system (IC102) on PC-57 board is faulty. If they don't, D5V and A5V systems on PC-56 board are faulty.
	Both of D5V and A5V do not appear.	→	Check the CONTROL system (IC3 or IC5) on PC-56 board.
	D5V only appears.	→	Check A5V system (IC103) on PC-56 board.
	A5V only appears.	→	Check D5V system (IC102) on PC-56 board.
3	LEDs on the control panel do not light when you turn on HDV-10		
	The FAN MOTOR rotates.	→	+12 V Reg (IC2) on PC-56 board
	The FAN MOTOR does not rotate.	→	The CONTROL system on PC-56 board
4	HDV-10 is locked in the INITIAL state.		
	The green power switch LED is on.	→	The power supply block is normal.
	The green power switch LED is off.	→	Go to step 2.
5	The program is not loaded though the image of EE appears.		
	The FAN MOTOR rotates.	→	The power supply block is normal.
	The FAN MOTOR does not rotate.	→	+15 V system (Q2) on PC-56 board.
6	A hexadecimal error code flashes on the 2-digit numeric display (D2) on SV-116 board.		
	Error code 0C	→	The primary input voltage is irregular. (Failures such as instantaneous power stop occur.)
	10	→	+12 V does not appear.
	11	→	DIGITAL+5 V power voltage is irregular.
	12	→	+12 V power voltage is irregular.
	13	→	+15 V power voltage is irregular.
	14	→	–5 V power voltage is irregular.
	15	→	–12 V power voltage is irregular.

10-3. ADJUSTMENT PREPARATIONS

10-3-1. Removal of Power Supply Block

(1) Remove the power supply block referring to Section 2-9-3 Removal of Power Supply.
(2) Remove the cover assembly of the power supply block, referring to Section 2-9-4 Removal of PS-187/PC-56/PC-57/AC-100 Boards.
(3) Loosen four screws (+B3 × 8) fixing the fan bracket and pull it out by about 3 cm as shown in the figure.

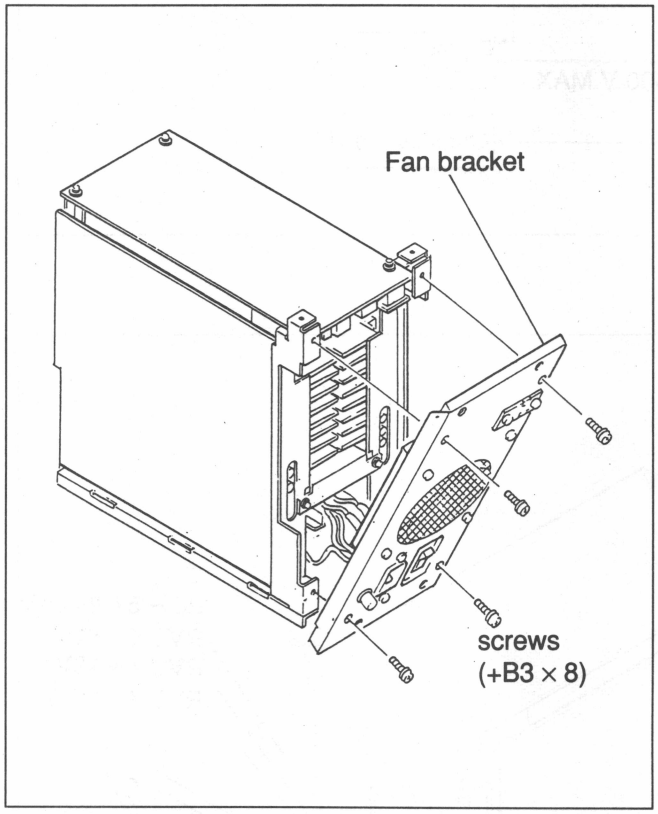

(4) Place the lid ass'y of the power unit beside the main unit and set the power supply block on it as shown in the figure. Connect the harness cables from the main unit to CN911 on PC-56 board and CN914 on PC-57 board.

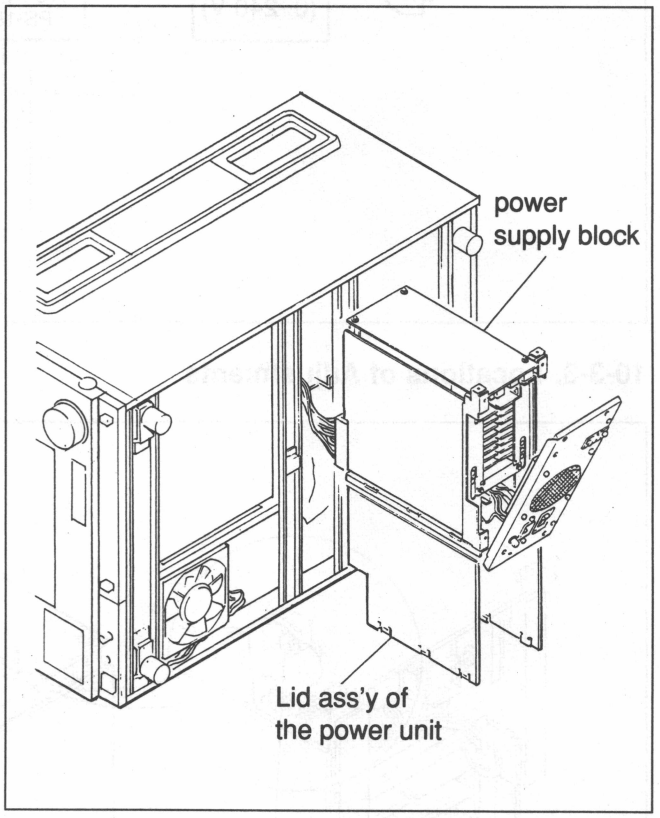

10-3-2. Connection

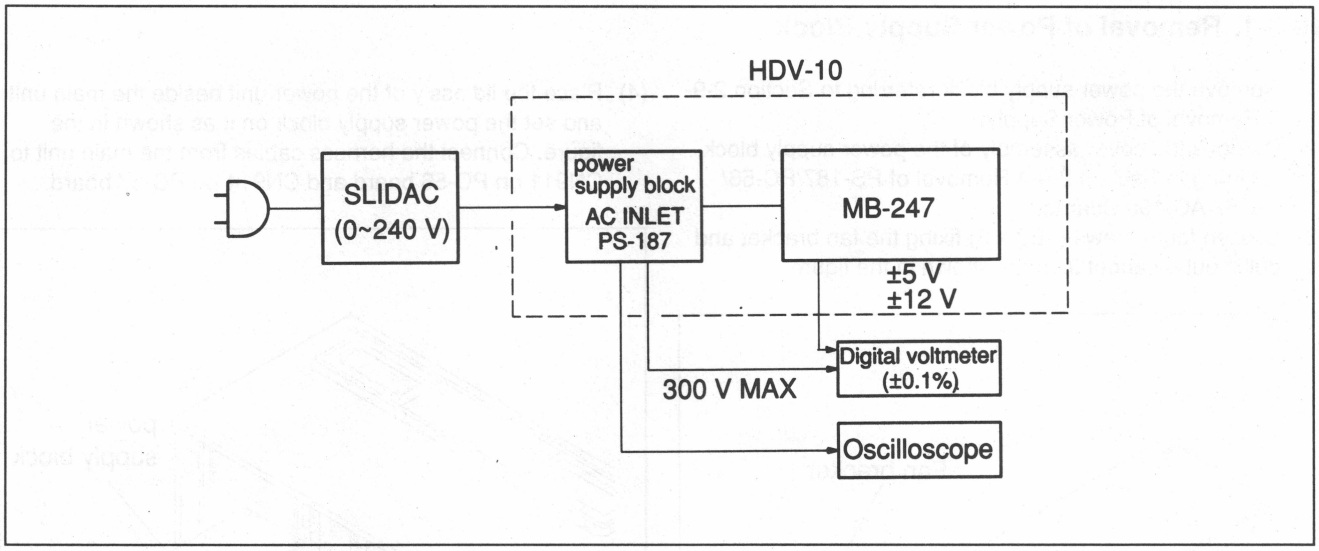

10-3-3. Locations of Adjustments

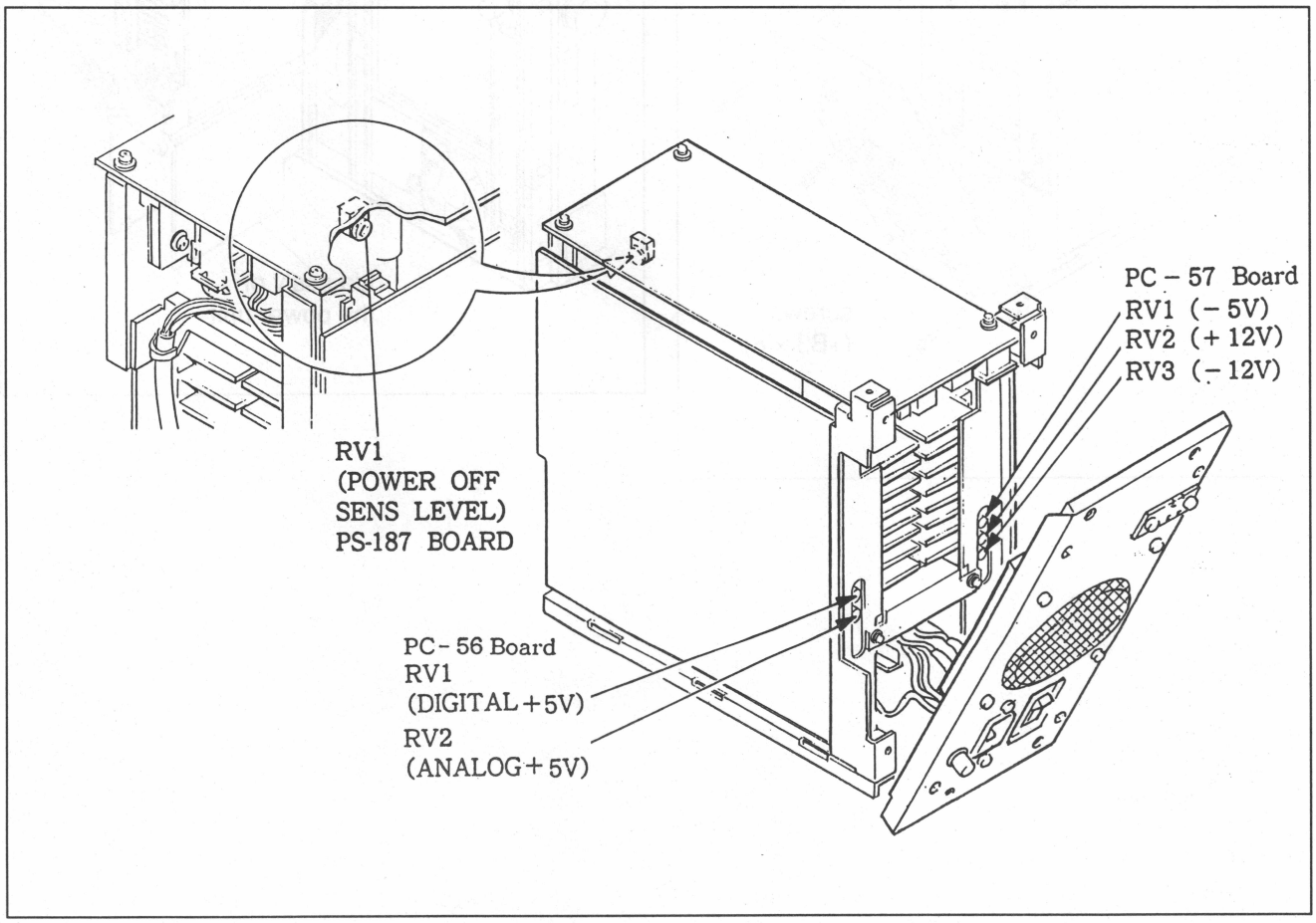

- PS-187 board

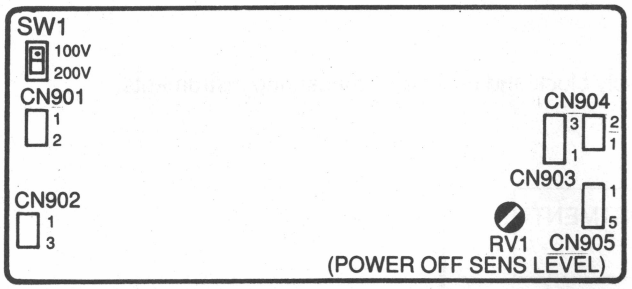

PS-187 Board
- A Side -

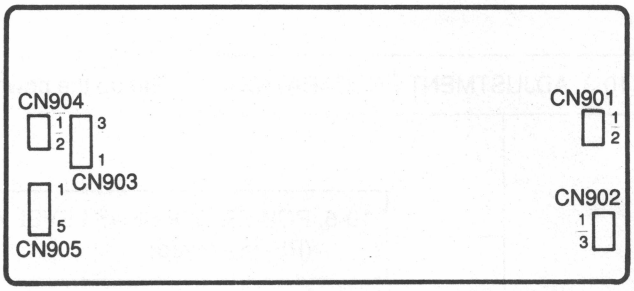

PS-187 Board
- B Side -

- PS-56 board

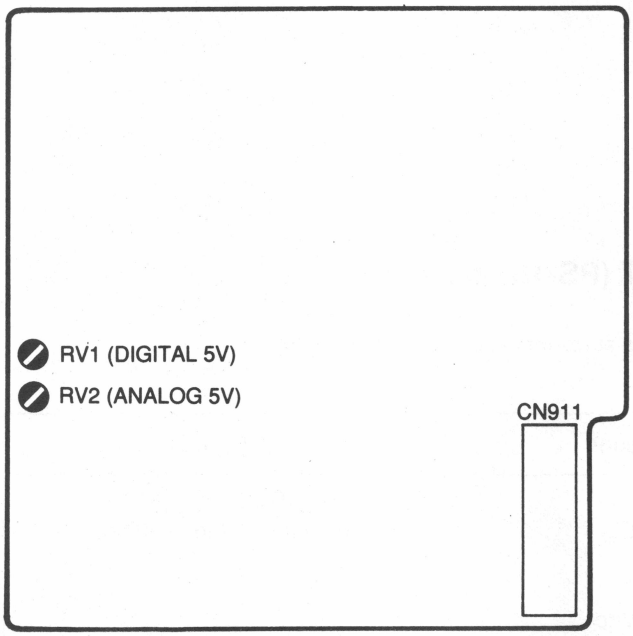

PC-56 Board
- A Side -

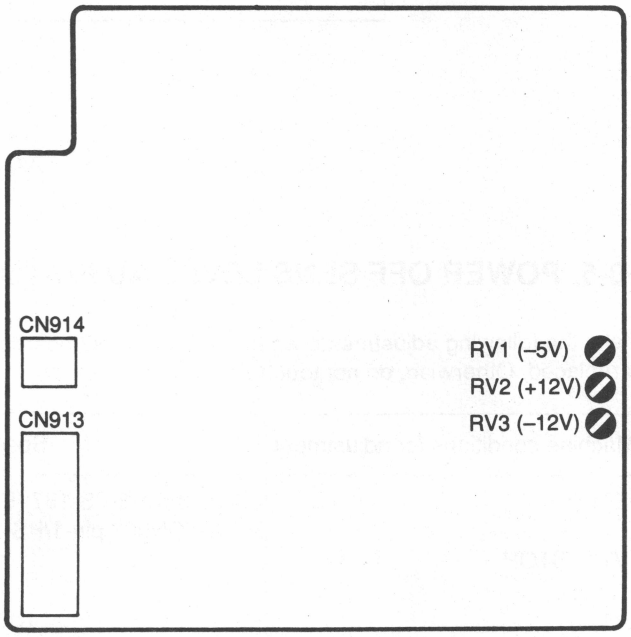

PC-57 Board
- A Side -

10-4. ADJUSTMENT SEQUENCE

10-3. ADJUSTMENT PREPARATIONS — Set up the power supply block and necessary measuring instruments.

- 10-5. POWER OFF SENS LEVEL ADJUSTMENT (PS-187 board)
- 10-6. DIGITAL +5 V/ANALOG +5 V ADJUSTMENT (PC-56 board)
- 10-7. –5 V/+12 V/–12 V ADJUSTMENT (PC-57 board)

Make necessary adjustments.

10-5. POWER OFF SENS LEVEL ADJUSTMENT (PS-187 board)

Make the following adjustments when IC1 on PC-187 board and its surrounding circuit components is replaced. Otherwise, do not touch RV1.

Machine conditions for adjustment	Specifications	Adjustments
STEP-1 VTR: STOP	CN903 pin-3/PS-187 (E2) GND: CN903 pin-1/PS-187 (E2) 180 ± 1 Vdc	⊘ SLIDAC (rectifier voltage setting.)
STEP-2 VTR: STOP Oscilloscope: 2 V/DIV 10 mS/DIV	CN905 pin-1/PS-187 (E3) GND: CN905 pin-3/PS-187 (E3) 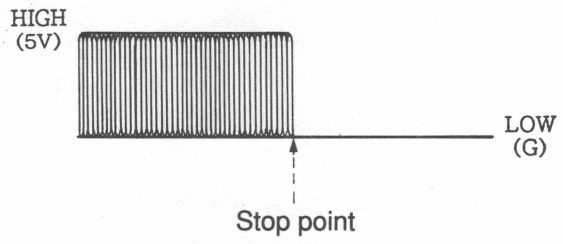 	⊘ RV1/PS-187 (E3) (POWER OFF SENS LEVEL adjustment.) • Rotate ⊘ RV1 fully clockwise. Then, rotate it slowly counter-clockwise. Stop rotating it immediately when getting the LOW LEVEL.
When no oscilloscopes are used:	Where the RUSH RELAY turns off, or the power supply block gets standby.	• Rotate ⊘ RV1 fully clockwise. Then, rotate it slowly counter-clockwise until the relay turns off.

10-6. DIGITAL +5 V/ANALOG +5 V ADJUSTMENT (PC-56 board)

Machine conditions for adjustment	Specifications	Adjustments
STEP-1 VTR: STOP	CN249/MB-247 (F8) GND: CN248/MB-247 (F9) +5.00 ± 0.05 Vdc	⊘ RV1/PC-56 (A3) (DIGITAL +5 V adjustment.)
STEP-2 VTR: STOP	CN232/MB-247 (B6) GND: CN236/MB-247 (A5) +5.00 ± 0.05 Vdc	⊘ RV2/PC-56 (A4) (ANALOG +5 V adjustment.)

10-7. –5 V/ +12 V/–12 V ADJUSTMENT (PC-57 board)

Machine conditions for adjustment	Specifications	Adjustments
STEP-1 VTR: STOP	CN239/MB-247 (D8) GND: CN233/MB-247 (B8) –5.00 ± 0.05 Vdc	⊘ RV1/PC-57 (E3) (–5 V adjustment.)
STEP-2 VTR: STOP	CN232/MB-247 (A4) GND: CN236/MB-247 (B2) +12.00 ± 0.05 Vdc	⊘ RV2/PC-57 (E3) (+12 V adjustment.)
STEP-3 VTR: STOP	CN238/MB-247 (C4) GND: CN242/MB-247 (D3) –12.00 ± 0.05 Vdc	⊘ RV3/PC-57 (E3) (–12 V adjustment.)

SECTION 11
FUNCTION CONTROL PANEL ALIGNMENT

11-1. ADJUSTMENT SEQUENCE

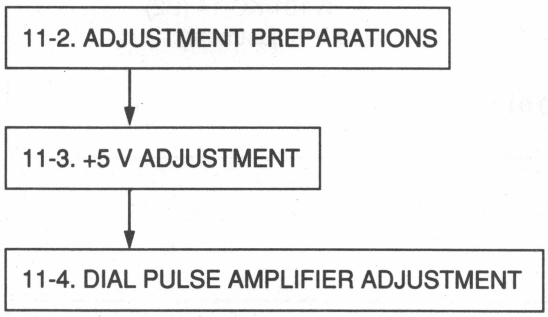

11-2. ADJUSTMENT PREPARATIONS

11-2-1. Connection

HDV-10

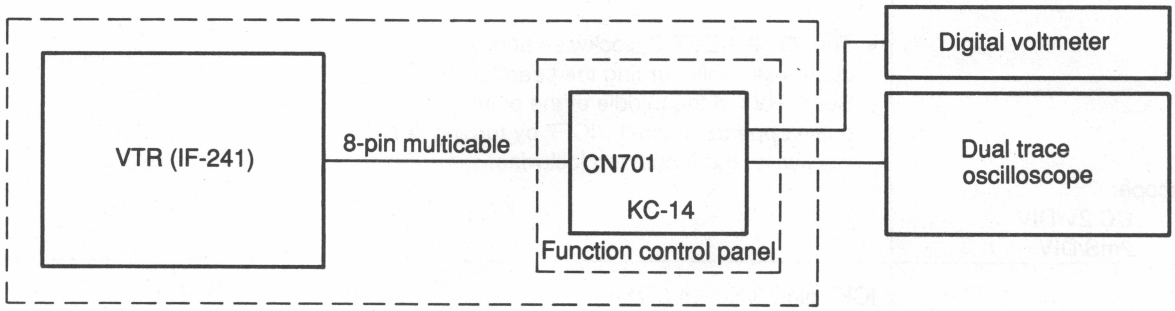

11-2-2. Locations of Adjustments and Test Points

- KC-14 board

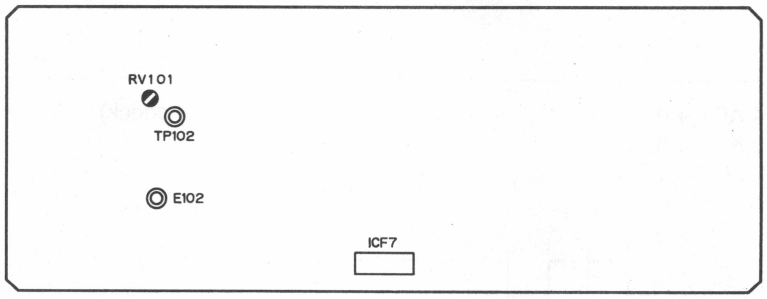

KC-14 Board
-A side-

DET-3 board

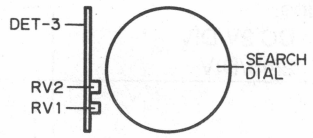

11-2-3. BEFORE STARTING ADJUSTMENT

(1) Remove KC-14 board, referring to Section 2-6 Removing Components of the Function Control Panel.
(2) Connect the 8-pin multicable from IF-241 board to CN701 on KC-14 board.

11-3. +5 V ADJUSTMENT

Machine conditions for adjustment	Specifications	Adjustments
STEP-1 VTR: POWER ON	TP102/KC-14 (C3) GND: E102/KC-14 (B6) +5.0 ± 0.01 Vdc	⊘ RV101/KC-14 (B2) (+5 V Adjustment)

11-4. DIAL PULSE AMPLIFIER ADJUSTMENT

Machine conditions for adjustment	Specifications	Adjustments
STEP-1 VTR: JOG mode Oscilloscope: DC 2V/DIV 2mS/DIV	ICF7 pin-14/KC-14 (F7) GND: E102/KC-14 (B6) • Turn ⊘ RV1/DET-3 clockwise and counter-clockwise, while turning the search dial. Set ⊘ RV1 in the middle of the points where the pulse appears at pin-14/ICF7 by turning ⊘ RV1 clockwise and a counterclockwise.	⊘ RV1/DET-3 (TOUCH 0° Adjustment)
STEP-2 VTR: JOG mode Oscilloscope: DC 2V/DIV 2mS/DIV	ICF7 pin-13/KC-14 (F7) GND: E102/KC-14 (B6) • Adjust ⊘ RV2/DET-3 for pin-13/ICF7 as STEP-1.	⊘ RV2/DET-3 (TOUCH 90° Adjustment)
STEP-3 VTR: JOG mode • Make sure that the timing of the pulse is shown in the right timing chart, while turning the search dial in the direction of FWD or REV. Oscilloscope: CHOP, DC 2V/DIV, 2mS/DIV	ICF7 pin-14/KC-14 (F7) ICF7 pin-13/KC-14 (F7) GND: E102/KC-14 (B6) FWD ICF7 pin-14/KC-14 ICF7 pin-13/KC-14 REV ICF7 pin-14/KC-14 ICF7 pin-13/KC-14	(Search dial check)

SECTION 12
SERVO SYSTEM ALIGNMENT

12-1. ADJUSTMENT SEQUENCE

12-2. ADJUSTMENT PREPARATION

↓

12-3. DRUM MOTOR TEST

↓

12-4. CAPSTAN MOTOR TEST

↓

12-5. S REEL MOTOR TEST

↓

12-6. T REEL MOTOR TEST

↓

12-7. PLUNGER TEST

↓

12-8. LOADING TEST

↓

12-9. CASSETTE ID SENSOR OPERATION CONFIRMATION

↓

12-10. DRUM FG LEVEL CHECK

↓

12-11. DRUM PG LEVEL CHECK

↓

12-12. DRUM FG ERROR CORRECTION ADJUSTMENT

↓

12-13. RF LEVEL METER ADJUSTMENT

↓

12-14. CHECK TOP/END SENSOR OPERATION

12-2. ADJUSTMENT PREPARATION

12-2-1. Version Confirmation

The servo-system adjustment is valid for the ROM version indicated below and later.

IF = 1–1–0, SY = 1–1–0, SV = 1–1–0

The version can be confirmed by the following operation.

1. Enter the test mode by pressing [SET UP], [C], [–], [SET], in the 21 key section.
2. Press [1], [7], [SET], [+], [+], [+], select VERSION and press [SET].
3. On the display IF = X–X–X, SY = X–X–X, SV = X–X–X will be displayed.

12-2-2. Connection

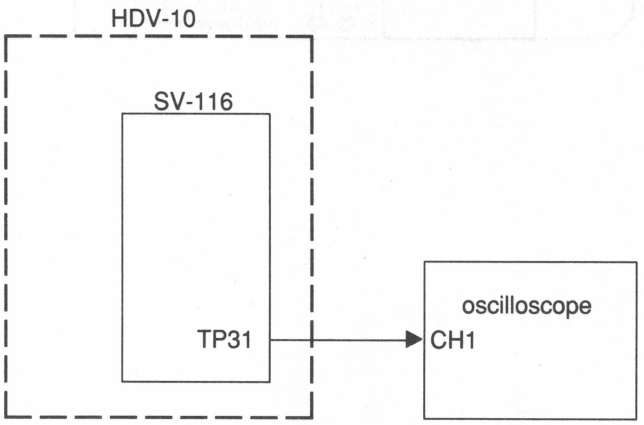

- Extension Board EX-213
- Standard Tape GR5-1
- Self-Recording/Self-Playback Tape

12-2-3. Locations

- SV-116 BOARD

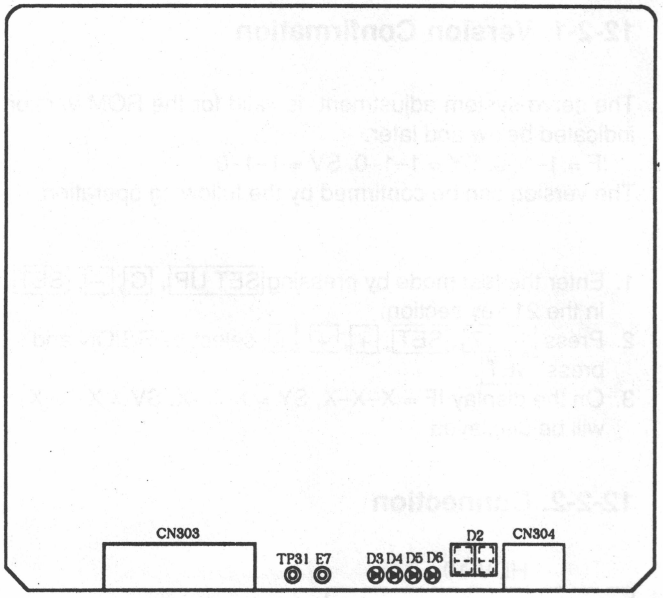

12-2-4. Servo-Test Mode

[Preliminary information]

1. When checking the drum and reel operation, start (or enter) the servo-test mode without inserting the cassette tape.
   Note: If the cassette tape is inserted the servo-test mode will not start.
2. If the main parts are replaced, before loading the cassette tape, check the operation in the test mode.

[Operation]

To start (or enter) the servo-test mode do, the operation below.

1. Enter the test mode by pressing [SET UP], [C], [–], [SET] in the 21 key section.
2. Press [1], [7], [SET], [+], [+], select TTP ADJ and press [SET]. When this is done the control panel display will look like the following illustration.

T*R XX : XX : XX	TAPE OUT
TTP ADJ	0000 0000 0000

1. Next press the [C], [0], and [SET] keys in order. The command panel display will look as follows, and [0] [1] will flash on the SV-116 boad numerical display LED (D2).

T*R XX : XX : XX	TAPE OUT
SERVO TEST MODE	0000 0000 0000

- To return to the TTP ADJ mode from the servo-test mode, press keys [C], [1], [SET] in order. At this time the SV-116 board's numerical display LED (D2) will return to [0] [0].
- When returning from the TTP ADJ mode to the normal mode, turn the power off and then on again.
- When the wrong key has been pushed, press the [T] key and it will backspace.
  (This key becomes effective under the servo-test mode.)
- The tree indicated rates the lower right of the display are indicated rate 1, indicated rate 2 and indicated rate 3 from the left.

– Control Panel –

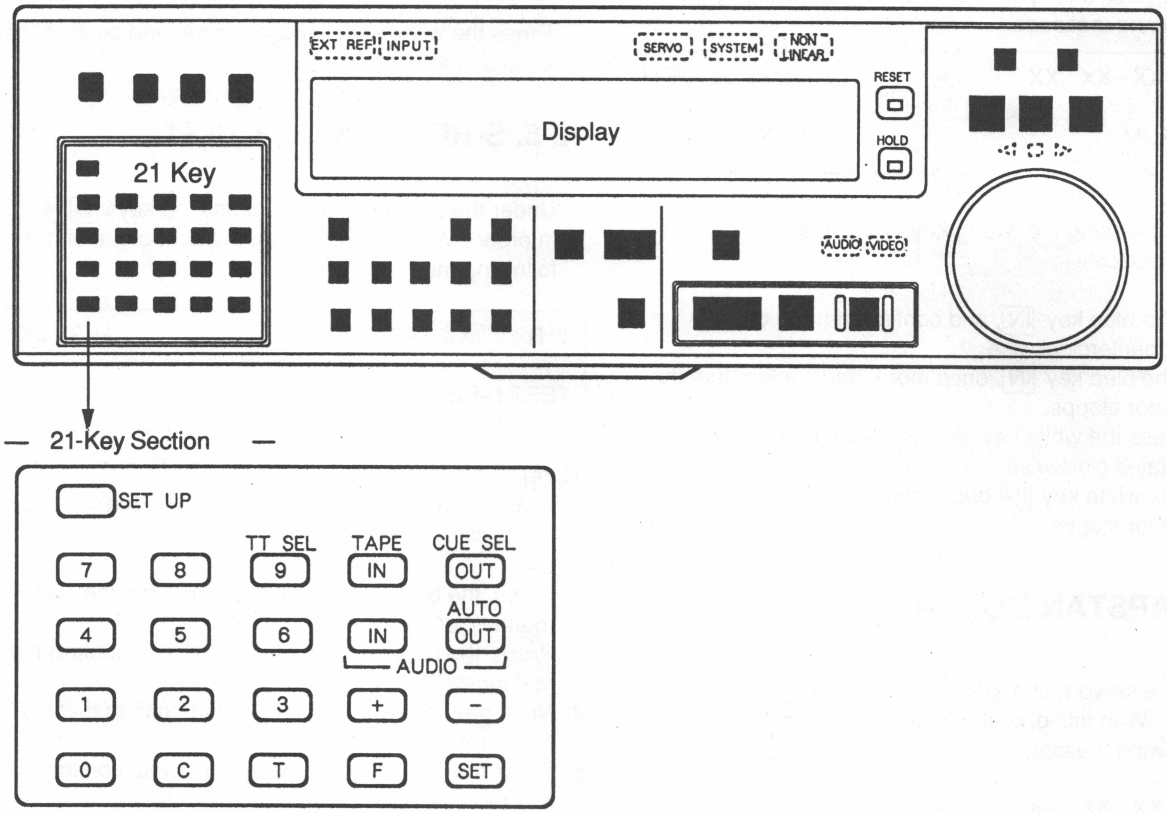

– Test Menu –

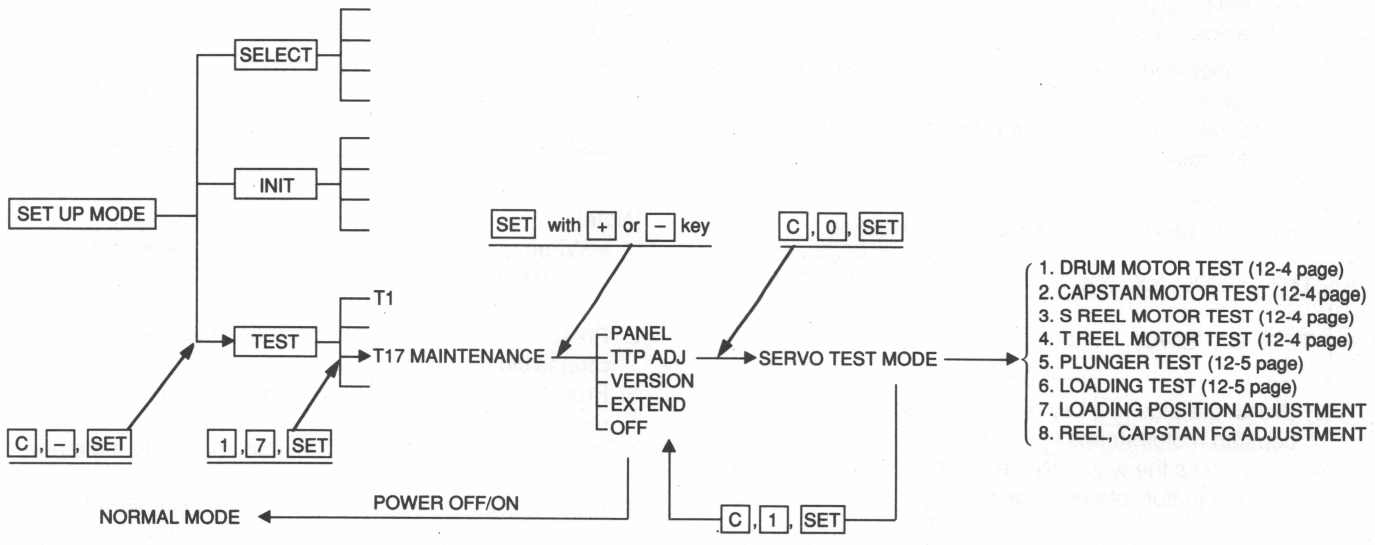

12-3. DRUM MOTOR TEST

1. Under the servo-test mode, press the keys [C], [2], [SET] in order. With this operation, the control panel displays the following message.

T*R XX : XX : XX	TEST MODE
TEST DRUM	0000 0000 0000

[Note]
- When pressing the wrong key, press the key [T], and it backspaces.

2. Press the blue key [IN], and confirm that the drum rotates counterclockwise.
3. Press the blue key [IN], once more, and confirm that the drum motor stopps.
4. Next, press the white key [IN], and confirm that the drum rotates clockwise.
5. Press the white key [IN] once more, and confirm that the drum motor stopps.

12-4. CAPSTAN MOTOR TEST

1. Under the servo-test mode, press the keys [C], [3], [SET] in order. With this operation, the control panel displays the following message.

T*R XX : XX : XX	TEST MODE
TEST CAPSTAN	0000 0000 0000

indicated rate 1 — indicated rate 2

[Note]
- When pressing the wrong key, press the key [T], and it backspaces.
- The indicated rate 1 shows the direction of the capstan motor rotation.
  The indicated rate 2 shows the speed of the capstan motor rotation.

2. Press the blue [IN] key, and confirm that the capstan motor rotates in a counterclockwise direction.

T*R XX : XX : XX	TEST MODE
TEST CAPSTAN	0020 XXXX XXXX

3. Press the blue [IN] key once more, and confirm that the capstan motor stopps.
4. Next, press the white [IN] key, and confirm that the capstan motor rotates clockwise.

T*R XX : XX : XX	TEST MODE
TEST CAPSTAN	0000 XXXX XXXX

5. Press the white key [IN] once more, and confirm that the capstan motor stopps.

12-5. S-REEL MOTOR TEST

1. Under the servo-test mode, press the keys [C], [4], [SET] in order. With this operation, the control panel displays following message.

T*R XX : XX : XX	TEST MODE
TEST S-REEL	0000 0000 0000

[Note]
- When pressing the wrong key, press the key [T], and it backspaces.

2. Press the blue key [IN], and confirm that the reel moter rotates clockwise.
3. Press the blue key [IN] once more, and confirm that the reel motor stopps.
4. Next, press the [IN] white key, and confirm that the reel motor rotates counterclockwise.
5. Press the white key [IN] once more, and confirm that the reel motor stopps.

12-6. T-REEL MOTOR TEST

1. From the servo-test mode, press the keys [C], [5], [SET] in order. With this operation, the control panel displays the following message.

T*R XX : XX : XX	TEST MODE
TEST T-REEL	0000 0000 0000

[Note]
- When pressing the wrong key, press the key [T], and it backspaces.

2. Press the blue key [IN], and confirm that the reel motor rotates clockwise.
3. Press the blue key [IN] once more, and confirm that the reel motor stopps.
4. Next, press the white key [IN], and confirm that the reel motor rotates counterclockwise.
5. Press the white key [IN] once more, and confirm that the reel motor stopps.

12-7. PLUNGER TEST

1. Under the servo-test mode, press the keys [C], [6], [SET] in order. With this operation the control panel displays the following message.

T*R XX : XX : XX	TEST MODE
TEST PLUNGERS	0000 0000 0000

[Note]
- When pressing the wrong key, press the key [T], and it backspaces.

2. Confirm that the S-reel brake plunger turns on and off when the blue key [IN] is pressed.
3. Confirm that the T-reel brake plunger turns on and off when the blue key [OUT] is pressed.
4. Confirm that the pinch plunger turns on and off when the white key [IN] is pressed.

[Note]
- When threading is not in the threading-end position, the pinch plunger does not turn off. Gently push it with finger, and confirm that it turns off.

12-8. LOADING TEST

1. Under the servo-test mode, press the keys [C], [1], [3], [SET] in order. With this operation the control panel displays the following message.

T*R XX : XX : XX	TEST MODE
TEST LOADING	0000 0000 0000

[Note]
- When pressing the wrong key, press the key [T], and it backspaces.

2. Press the blue key [IN], and confirm that the cassette compartment lowers.
3. Press the blue key [OUT] once more, and confirm that the cassette compartment rises.
4. Press the white key [IN], and confirm that the threading ring rotates counterclockwise.
5. Press the white key [OUT] once more, and confirm that the threading ring rotates clockwise.

[Note]
- When threading ring is not in the unthreading position, the cassette compartment does not move. To move the cassette compartment, return the threading ring to the unthreading position.

12-9. CASSETTE ID SENSOR OPERATION CONFIRMATION

Machine conditions for adjustment	Specifications	Adjustments
STEP-1 1. If it is aleady set to TTP ADJ mode, turn the power off and on again. 2. Enter the test mode by pressing the keys [SET UP], [C], [–], [SET]. 3. Press the keys [1], [7], [SET], [+], [+] to select TTP ADJ.		
STEP-2	Display T * R XX : XX : XX TAPE OUT ID-SENSOR 0000 0000 0000	Press [C], [5], [2], [SET] in order.
STEP-3 Cassette not loaded	Display T * R XX : XX : XX TAPE OUT ID-SENSOR 00FF 0000 0000 0000	
STEP-4 Load a cassette with the REC INHIBIT turned off (a casette that can be recorded on).	Display T * R XX : XX : XX STILL TEST LOADING 0088 0000 0000 0000 At the same time the AUDIO/VIDEO REC INHIBIT indicators on the control panel both are extinguished.	
STEP-5 Load a cassette with the REC INHIBIT turned on (a cassette that cannot be recorded on).	Display T * R XX : XX : XX STILL TEST LOADING AO 0000 0000 0000 At the same time the AUDIO/VIDEO REC INHIBIT indicators on the control panel both are lit.	

12-10. DRUM FG LEVEL CHECK

<table>
<tr><th>Machine conditions for adjustment</th><th>Specifications</th><th>Adjustments</th></tr>
<tr><td colspan="3">STEP-1
1. If it is already set to TTP ADJ mode, turn the power off and on again.
2. Enter the test mode by pressing the keys [SET UP], [C], [–], [SET].
3. Press the keys [1], [7], [SET], [+], [+] to select TTP ADJ.</td></tr>
<tr><td>STEP-2

• Alignment tape GR5-1
• VTR → STAND BY
(Drum rotates)</td><td>Display
T * R XX : XX : XX STILL

DRUM AFG</td><td>Press [C], [3], [8] in order.</td></tr>
<tr><td>STEP-3

• Oscilloscope
2 V/DIN
200 µS/DIN</td><td>TP31/SV-116 (E18)
GND: E7/SV-116 (F18)
 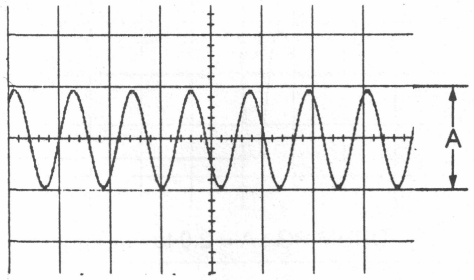

DRUM FG : A ≧ 2.0 Vp-p</td><td></td></tr>
</table>

12-11. DRUM PG LEVEL CHECK

<table>
<tr><th>Machine conditions for adjustment</th><th>Specifications</th><th>Adjustments</th></tr>
<tr><td colspan="3">STEP-1
1. If it is already set to TTP ADJ mode, turn the power off and on again.
2. Enter the test mode by pressing the keys [SET UP], [C], [−], [SET].
3. Press the keys [1], [7], [SET], [+], [+] to select TTP ADJ.</td></tr>
<tr><td>STEP-2

• Alignment tape GR5-1
• VTR → STAND BY
(Drum rotates)</td><td>Display
T * R XX : XX : XX STILL

DRUM AFG</td><td>Press [C], [3], [9], in order.</td></tr>
<tr><td>STEP-3

• Oscilloscope
2 V/DIV
500 µS/DIV</td><td>TP31/SV-116 (E18)
GND: E7/SV-116 (F18)
 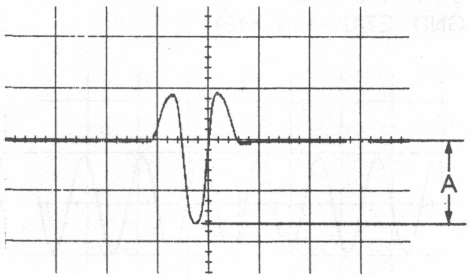

DRUM PG : A = 2.0 to 4.0 Vp-p</td><td></td></tr>
</table>

12-12. DRUM FG ERROR CORRECTION ADJUSTMENT

<table>
<tr><th>Machine conditions for adjustment</th><th>Specifications</th><th>Adjustments</th></tr>
<tr><td colspan="3">STEP-1
1. Enter the test mode by pressing the keys [SET UP], [C], [–], [SET].
2. Press teh keys [1], [7], [SET], [+], [+] to select TTP ADJ.</td></tr>
<tr><td>STEP-2

• Standard tape GR5-1
• VTR → STAND BY
(Drum rotates)
• D3/SV-116: lights
(Drum: phase lock)</td><td>Display
T * R XX : XX : XX STILL

ADJUST DRUM FG 0000 0000 0000
• Confirm that the servo alarm lamp (red) in the upper right of the display is lit, and carry out the adjustment.</td><td>Press [C], [5], [3], [SET] in order.
When this menu is called, adjustment takes place automatically.
When END is displayed, move to STEP-3.</td></tr>
<tr><td>STEP-3</td><td></td><td>Press [C], [9], [9], [SET] in order.
(DATA SAVE OK? is displayed)
• While holding the [F] key down, press the white key [IN]. When “Y” is shown on the display, press the [SET] key.
(The adjustment values are read into NOV-RAM.)
Confirm that DATA SAVED is shown on the display.</td></tr>
</table>

12-13. RF LEVEL METER ADJUSTMENT

Machine conditions for adjustment	Specifications	Adjustments
STEP-1 1. If it is already set to TTP ADJ mode, turn the power off and on again. 2. Enter the test mode by pressing the keys [SET UP], [C], [–], [SET]. 3. Press the keys [1], [7], [SET], [+], [+] to select TTP ADJ.		
STEP-2 • Alignment tape GR5-1 • VTR → PB (Color Bar)	While playback the alignment tape, make the trucking volume variable, and adjust the RF meter to the maximum.	• Tracking volume
STEP-3	Display T * R XX : XX : XX STILL RF METER ADJ 0000 0000 0000	Press [C], [6], [7], [SET] in order.
STEP-4		• Press [C], [9], [9], [SET] in order. • While holding the [F] key down, press the white key [IN]. When "Y" is shown on the display, press the [SET] key. (The adjustment values are read into NOV-RAM.) Confirm that DATA SAVED is shown on the display.

12-14. CHECK TOP/END SENSOR OPERATION

<table>
<tr><th>Machine conditions for adjustment</th><th>Specifications</th><th>Adjustments</th></tr>
<tr><td colspan="3">STEP-1
1. If it is already set to TTP ADJ mode, turn the power off and on again.
2. Enter the test mode by pressing the keys [SET UP], [C], [–], [SET].
3. Press the keys [1], [7], [SET], [+], [+] to select TTP ADJ.</td></tr>
<tr><td>STEP-2</td><td>Display
T * R XX : XX : XX TEST MOD
TOP/END SENSOR 0001 0001 0000</td><td>Press [C], [5], [0], [SET] in order.</td></tr>
<tr><td>STEP-3</td><td>Display
T * R XX : XX : XX TEST MOD
TOP/END SENSOR 0000 0001 0000
Confirm that the 0000 is shown on the display.</td><td>Cut off the light beam between the transmitting and receiving blocks of the tape end sensor.</td></tr>
<tr><td>STEP-4</td><td>Display
T * R XX : XX : XX TEST MOD
TOP/END SENSOR 0000 0000 0000
Confirm that the 0000 is shown on the display.</td><td>Cut off the light beam between the transmitting and receiving blocks of the tape top sensor.</td></tr>
</table>

SECTION 13
CUE, TC, CTL SYSTEM ALIGNMENT

13-1. ADJUSTMENT SEQUENCE

13-2. ADJUSTMENT PREPARATION

↓

13-3. ERASE SYSTEM ADJUSTMENT

↓

* 13-4. PLAYBACK SYSTEM ADJUSTMENT

↓

13-5-1. Bias Adjustment
* 13-5-2. Bias Fine Adjustment
* 13-5-3. Recording Level Adjustment

↓

* 13-6. CROSSTALK CANCELER ADJUSTMENT

Adjustment with the * mark are able to be done without using the extension board.

13-2. ADJUSTMENT PREPARATIONS

13-2-1. Connection

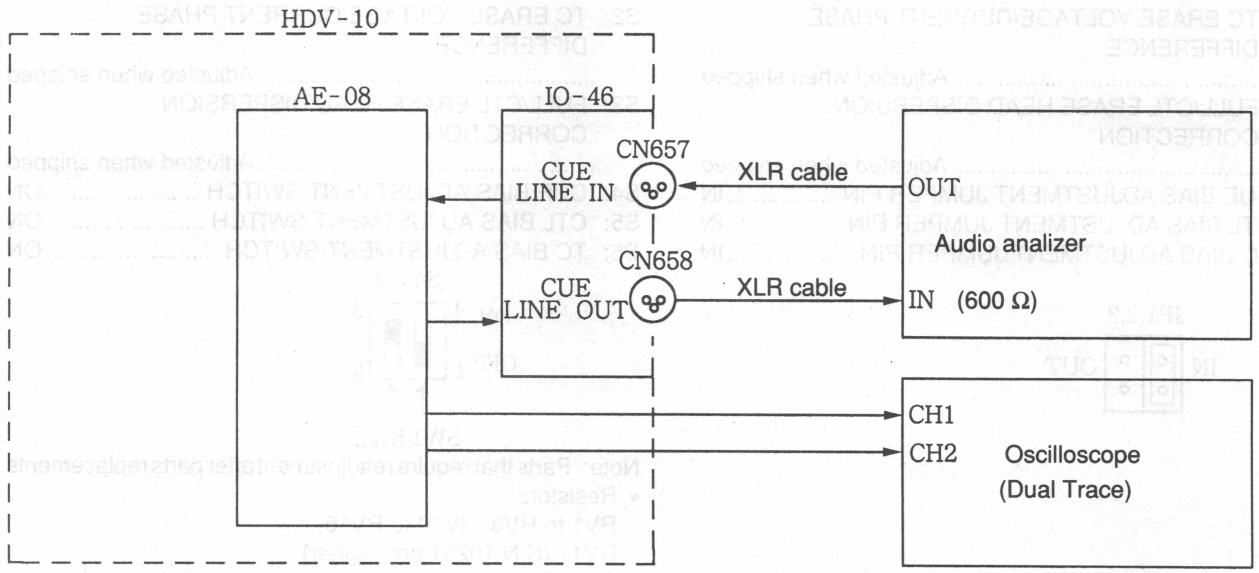

- Extension board EX-213
- Alignment tape GR5-1
- Self-recording/self-playback tape

13-2-2. Locations of Adjustments and Test Points

- AE-08 board

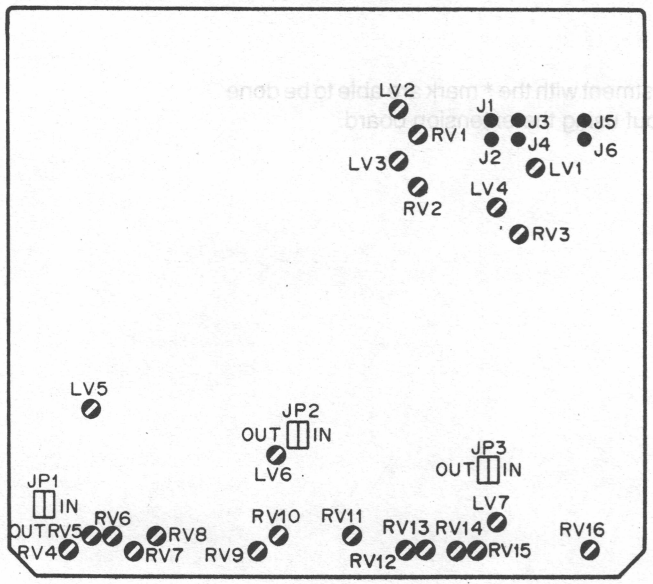

AE-08 BOARD
–A side –
(S/N 10001 through 10199)

*RV9 (S/N 10001 through 10199)

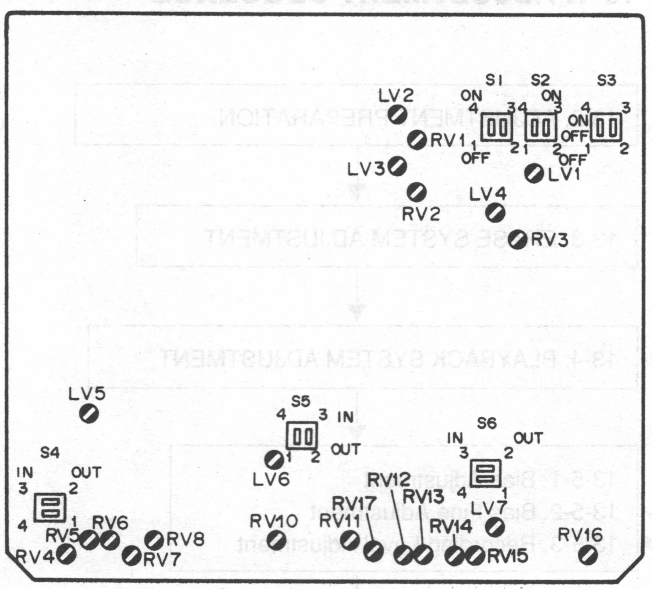

AE-08 BOARD
–A side –
(S/N 10201 and higher)

*RV17 (S/N 10201 and higher)

13-2-3. Initial Setting of Switches and Jumperes

Applicable (S/N 10001-10199)

J1/J2: CUE ERASE VOLTAGE/CURRENT PHASE DIFFERENCE
.....Adjusted when shipped

J3/J4: TC ERASE VOLTAGE/CURRENT PHASE DIFFERENCE
.....Adjusted when shipped

J5/J6: FULL/CTL ERASE HEAD DISPERSION CORRECTION
.....Adjusted when shipped

JP1: CUE BIAS ADJUSTMENT JUMPER PIN .....IN

JP2: CTL BIAS ADJUSTMENT JUMPER PIN .....IN

JP3: TC BIAS ADJUSTMENT JUMPER PIN .....IN

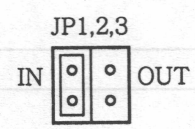

Applicable (S/N 10201and higher)

S1: CUE ERASE VOLTAGE/CURRENT PHASE DIFFERENCE
.....Adjusted when shipped

S2: TC ERASE VOLTAGE/CURRENT PHASE DIFFERENCE
.....Adjusted when shipped

S3: FULL/CTL ERASE HEAD DISPERSION CORRECTION
.....Adjusted when shipped

S4: CUE BIAS ADJUSTMENT SWITCH .....ON

S5: CTL BIAS ADJUSTMENT SWITCH .....ON

S6: TC BIAS ADJUSTMENT SWITCH .....ON

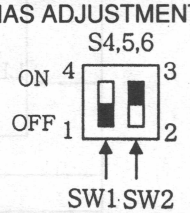

Note: Parts that require readjustment after parts replacements

- Resistors
  RV1 to RV8, RV10 to RV16,
  RV17 (S/N 10201 and higher)
- Capacitor
  C36 (surrounding CUE ERASE)
  C40 (surrounding TC ERASE)
- Coils
  LV1 to LV7

13-3. ERASE SYSTEM ADJUSTMENT

13-3-1. FULL and CTL Erase Adjustment

Machine conditions for adjustment	Specifications	Adjustments
(Preparation) • Extend AE-08 board by EX-213 extension board. • Turn on the power switch and insert the self-recording/self-playback tape.		
STEP-1 VTR : REC • S1 (N3): SW1 → ON SW2 → OFF 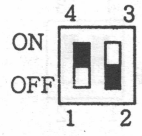 • Other settings, except S1, are the same as the 13-2-3. Initial Settings. • Oscilloscope CH1 : 100 mV/DIV CH2 : 100 mV/DIV INVERT TIME : 5 µS/DIV MODE : ADD	CH1: TP3/AE-08 (Q2) GND: E4/AE-08 (R5) CH2: TP6/AE-08 (Q3) GND: E4/AE-08 (R5) 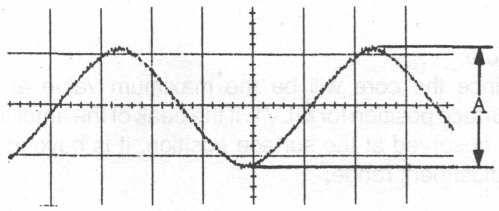 Make adjustments to obtain maximum amplitude "A" without distortion.	⊘ RV3/AE-08 (P5) (FULL ERASE LEVEL) ⊘ LV4/AE-08 (N5) (FULL ERASE) • Adjust ⊘RV3 to maximum (turn fully clockwise). • Turn ⊘LV4 and adjust it to obtain maximum amplitude. • If the waveform is distorted at this time, lower the level of ⊘RV3, and repeat the ⊘LV4 adjustment.
STEP-2 S1: Same as STEP-1	CH1: TP3/AE-08 (Q2) GND: E4/AE-08 (R5) CH2: TP6/AE-08 (Q3) GND: E4/AE-08 (R5) 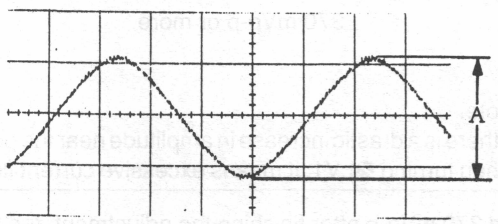 Make adjustments to obtain maximum amplitude "A" without distortion.	⊘ RV3/AE-08 (P5) (FULL ERASE LEVEL) ⊘ LV1/AE-08 (P4) (FULL ERASE MATCHING) • Turn ⊘LV1, and adjust it to obtain maximum amplitude. • If the waveform is distorted at this time, lower the level of ⊘RV3, and repeat the ⊘LV1 adjustment.

Machine conditions for adjustment	Specifications	Adjustments
STEP-3 VTR : REC • Same as STEP-1	CH1: TP3/AE-08 (Q2) GND: E4/AE-08 (R5) CH2: TP6/AE-08 (Q3) GND: E4/AE-08 (R5) Do not exceed the amplitude over the adjustment range. Note: Since the core will be the maximum value at the surface position for ⊘LV1, if the peak of the amplitude is observed at the surface position, it is beyond the adjustment range.	• After finish STEP-1 and STEP-2, check whether the amplitude peak exceeded 370 mVp-p when turning ⊘LV1. • If the waveform does not satisfy the specification, set S1 as shown below and repeat STEP-2. • S1 (N3): SW1 → ON SW2 → ON 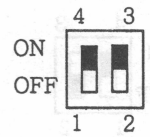 or • S1 (N3): SW1 → OFF SW2 → OFF 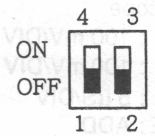
STEP-4 • Same as STEP-1	CH1: TP3/AE-08 (Q2) GND: E4/AE-08 (R5) CH2: TP6/AE-08 (Q3) GND: E4/AE-08 (R5) 370 mVp-p or more Note: If there is a drastic increase in amplitude near the peak when turning ⊘LV1, it means excessive current flow.	⊘ LV1/AE-08 (P4) (FULL ERASE MATCHING) • Turn ⊘LV1 and check whether the amplitude changes smoothly until it peaks. Set LV1 where the amplitude is maximum. • If the above condition is not satisfied, lower the level of ⊘RV3, and return to STEP-2.

Note: If the amplitude does not exceed 370 mVp-p after finishing the adjustment, the fixed head is defective. Replace it with a new one.

13-3-2. TC Erase Adjustment

Machine conditions for adjustment	Specifications	Adjustments
(Preparation) • Extend AE-08 board by EX-213 extension board. • Turn on the power switch and insert the self-recording/self-playback tape.		
STEP-1 • S2 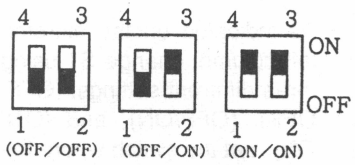 • Other settings, except for S2, are the same as the 13-2-3. Initial Setting. • Oscilloscope CH1 : 100 mV/DIV CH2 : 5 V/DIV TIME : 5 µS/DIV MODE : CHOP	CH1: TP2/AE-08 (N2) GND: E4/AE-08 (R5) CH2: TP8/AE-08 (N4) GND: E4/AE-08 (R5) 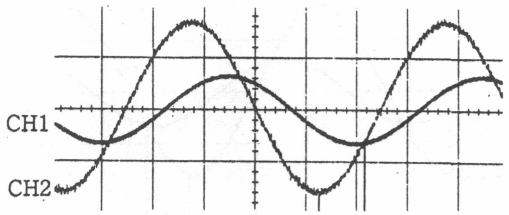 Set S2 in the condition of minimum phase difference between CH1 and CH2. Notes: • Make sure CH2 is not set to INVERT MODE. • If the waveform is distorted, check the phase difference after lowering the level of ⊘RV2 (turn counterclockwise) to correct the waveform distortion.	S2/AE-08 (P3) ⊘ RV2/AE-08 (L5) (CUE ERASE LEVEL) • As indicated on the extreme left column, change S2 using three different settings: (OFF/OFF), (OFF/ON), and (ON/ON). Set the switch where the phase difference of CH1 and CH2 is minimum.
STEP-2 S2: Same as STEP-1 • Oscilloscope CH1 : 100 mV/DIV CH2 : 100 mV/DIV INVERT TIME : 5 µS/DIV MODE : ADD	CH1: TP2/AE-08 (N2) GND: E4/AE-08 (R6) CH2: TP5/AE-08 (N4) GND: E4/AE-08 (R5) 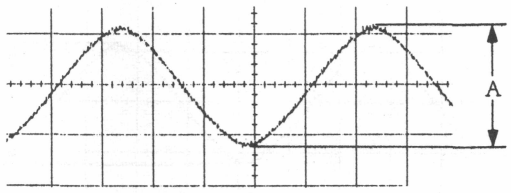 Make adjustments to obtain the maximum amplitude "A" without distortion. 370 mVp-p or more	⊘RV1/AE-08 (K3) (TC ERASE LEVEL) ⊘LV2/AE-08 (K3) (TC ERASE) • Set ⊘RV1 to maximum (turn fully clockwise). • Turn ⊘LV2 and adjust it to obtain maximum amplitude. • If the waveform is distorted at this time, lower the level of ⊘RV1, and repeat the ⊘LV2 adjustment.

Note: If the amplitude does not exceed 370 mVp-p after finishing the adjustment, the fixed head is defective. Replace it with a new one.

13-3-3. CUE Erase Adjustment

Machine conditions for adjustment	Specifications	Adjustments
(Preparation) • Extend AE-08 board by EX-213 extension board. • Turn on the power switch and insert the self-recording/self-playback tape.		
STEP-1 • S1 (N3) 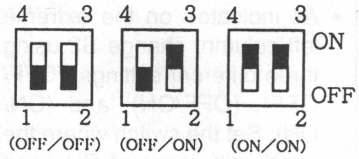 • Settings, except for S1, are the same as the 13-2-3. Initial Settings. • Oscilloscope CH1 : 100 mV/DIV CH2 : 5 V/DIV TIME : 5 µS/DIV MODE : CHOP	CH1: TP1/AE-08 (N2) GND: E4/AE-08 (R5) CH2: TP7/AE-08 (N4) GND: E4/AE-08 (R5) 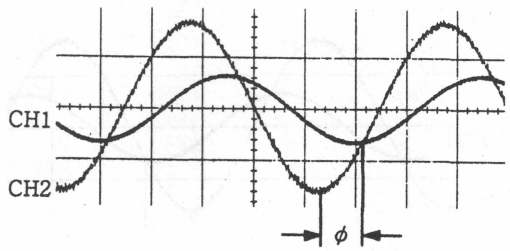 Set S1 in the condition of minimum phase difference between CH1 and CH2. Notes: • Make sure CH2 is not set to INVERT MODE. • If the waveform is distorted, check the phase difference after lowering the level of ⊘RV2 (turn counterclockwise) to correct the waveform distortion.	S1/AE-08 (N3) ⊘ RV2/AE-08 (L5) (CUE ERASE LEVEL) • As indicated on the extreme left column, change S1 using three different settings: (OFF/OFF), (OFF/ON), and (ON/ON). Set the switch where the phase difference of CH1 and CH2 is minimum.
STEP-2 S1: Same as STEP-1 • Oscilloscope CH1 : 100 mV/DIV CH2 : 100 V/DIV INVERT TIME : 5 µS/DIV MODE : ADD	CH1: TP1/AE-08 (N2) GND: E4/AE-08 (R5) CH2: TP4/AE-08 (N3) GND: E4/AE-08 (R5) 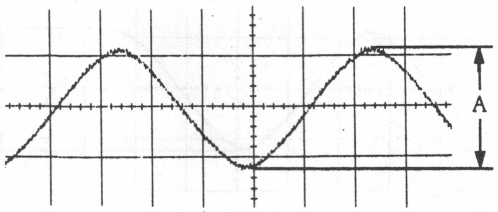 Make adjustments to obtain the maximum amplitude "A" without distortion. 400 mVp-p or more	⊘ RV2/AE-08 (L5) (CUE ERASE LEVEL) ⊘ LV3/AE-08 (K3) (CUE ERASE) • Set ⊘RV2 to maximum (turn fully clockwise). • Turn ⊘LV3 and adjust it to obtain maximum amplitude. • If the waveform is distorted at this time, lower the level of ⊘RV2, and repeat the ⊘LV3 adjustment.

Note: If the amplitude does not exceed 400 mVp-p after finishing the adjustment, the fixed head is defective. Replace it with a new one.

13-4. PLAYBACK SYSTEM ADJUSTMENT

13-4-1. CTL Adjustment

Machine conditions for adjustment	Specifications	Adjustments
(Preparation) • Replace AE-08 board in the unit. • Turn on the power switch and insert the alignment tape.		
VTR : PB (Playback the CTL signal of alignment tape.) • The switch and jumper settings are the same as the 13-2-3. Initial Setting. • Oscilloscope 500 mV/DIV TIME : 5 mS/DIV	CH1: TP26/AE-08 (H14) GND: E8/AE-08 (H14) 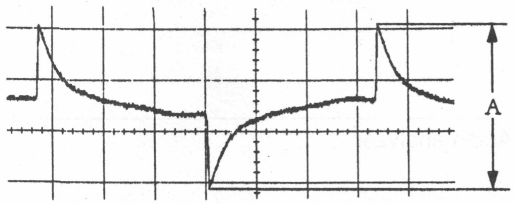 Playback level: 1.5 ±0.2 Vp-p	⊘ RV11/AE-08 (J14) (CTL PB LEVEL)

13-4-2. TC Adjustment

Machine conditions for adjustment	Specifications	Adjustments
(Preparation) • Replace AE-08 board in the unit. • Turn on the power switch and insert the alignment tape.		
VTR : PB (Alignment Tape TC signal) • The switch and jumper settings are the same as the 13-2-3. Initial Setting. • Oscilloscope 500 mV/DIV TIME : 200 µS/DIV	CH1: TP34/AE-08 (P14) GND: E10/AE-08 (N14) 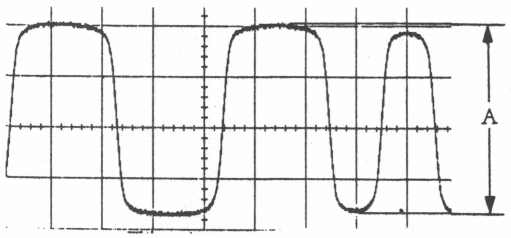 Playback level: 1.8 ±0.2 Vp-p	⊘ RV16/AE-08 (R14) (TC PB LEVEL)

13-4-3. CUE Adjustment

Machine conditions for adjustment	Specifications	Adjustments
(Preparation) • Replace AE-08 board in the unit. • Turn on the power switch and insert the alignment tape.		
STEP-1 VTR : PB (Playback the part of CUE signal: 1 KHz, +4.0 dBm of the alignment tape.) • The switch and jumper settings are the same as the 13-2-3. Initial Setting.	Audio analyzer Playback level: +4.0 ±0.3 dBm	⊘ RV8/AE-08 (D14) (CUE PB LEVEL)
STEP-2 VTR : PB (Playback the part of CUE signal: 10 KHz, +4.0 dBm of the alignment tape.) • The switch and jumper settings are the same as for STEP-1.	Audio analyzer Playback level: +4.0 ±0.3 dBm	⊘ RV4/AE-08 (A14) (CUE PB EQ)

13-5. RECORDING SYSTEM ADJUSTMENT

13-5-1. Bias Adjustment

<table>
<tr><th>Machine conditions for adjustment</th><th>Specifications</th><th>Adjustments</th></tr>
<tr><td colspan="3">(Preparation)
• Extend AE-08 board by EX-213 extension board.
(S/N 10001 through 10199)
• Set jumper pins JP1, 2, 3 to the OUT side.
 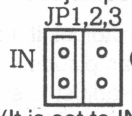

JP1: CUE BIAS adjustment jumper pin
JP2: CTL BIAS adjustment jumper pin
JP3: TC BIAS adjustment jumper pin
(It is set to IN when shipped.)
• Settings, except above JP1, JP2, JP3, S4, S5, and S6, are the same as 13-2-3. Initial Setting.
• Turn on the power of the unit, and insert a self-recording/ self-playback tape.

(S/N 10201 and higher)
• Set SW1 (1-4 pin) of dip switches S4, 5, 6 to OFF.
 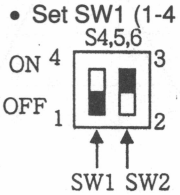

S4: CUE BIAS adjustment switch
S5: CTE BIAS adjustment switch
S6: TC BIAS adjustment switch
(It is set to ON when shipped.)</td></tr>
<tr><td>• CTL adjustment

VTR : REC

• Oscilloscope
10 V/DIV
TIME: 2 μs/DIV</td><td>CH1: TP25/AE-08 (H14)
GND: E8/AE-08 (H14)
 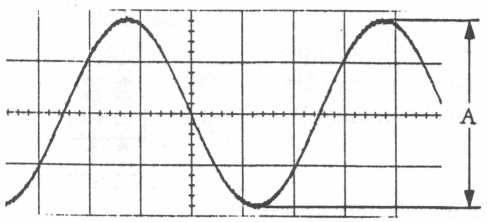

Bias level: Approx. 70.0 Vp-p</td><td>⊘ RV10/AE-08 (H14)
(CTL BIAS LEVEL)
⊘ LV6/AE-08 (G12)
(CTL BIAS)
⊘ RV9/AE-08 (G14)
(CTL REC LEVEL)

• Set ⊘RV10 at the mechanism's center.
• Turn ⊘LV6, and adjust it to obtain maximum amplitude.
• Turn ⊘RV10, and adjust it so that the bias level is approximately 70.0 Vp-p.
• Turn ⊘RV9 fully clockwise.

* ⊘RV9 (Serial No. 10001 to 10199 only).</td></tr>
<tr><td>• TC adjustment

VTR : REC

• Oscilloscope
10 V/DIV
TIME : 2 μS/DIV</td><td>CH1: TP31/AE-08 (L14)
GND: E10/AE-08 (N14)
 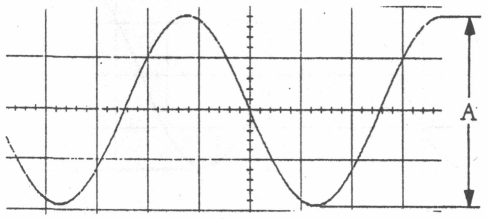

Bias level: Approx. 70.0 Vp-p</td><td>⊘ RV15/AE-08 (M14)
(TC BIAS LEVEL)
⊘ LV7/AE-08 (N14)
(TC BIAS)

• Set ⊘RV15 at the mechanism's center.
• Turn ⊘LV7, and adjust it to obtain maximum amplitude.
• Turn ⊘RV15, and adjust it so that the bias level will be approximately 70.0 Vp-p.</td></tr>
</table>

Machine conditions for adjustment	Specifications	Adjustments
• CUE adjustment VTR : REC • Oscilloscope 20 V/DIV TIME : 2 µS/DIV	CH1: TP14/AE-08 (B14) GND: E11/AE-08 (C14) 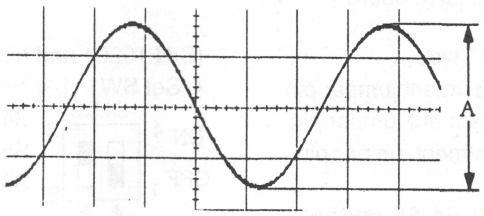 Bias level: Approx. 90.0 Vp-p	⊘ RV5/AE-08 (B14) (CUE BIAS LEVEL) ⊘ LV5/AE-08 (B10) (CUE BIAS) • Set ⊘RV5 at the mechanism's center. • Turn ⊘LV5, and adjust it to obtain maximum amplitude. • Turn ⊘RV5, and adjust it so that the bias level will be approximately 90.0 Vp-p.

13-5-2. Bias Fine Adjustment

Machine conditions for adjustment	Specifications	Adjustments
(Preparation) • Eject the self-recording/self-playback tape, and tune off the power of the unit. (S/N 10001 through 10199) • Set jumper pins JP1, 2, 3 to the IN side. 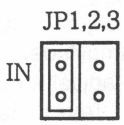 JP1: CUE BIAS adjustment jumper pin JP2: CTL BIAS adjustment jumper pin JP3: TC BIAS adjustment jumper pin • Settings, except above JP1, JP2, JP3, S4, S5, and S6, are the same as the initial setting. • Remove the extension board EX-213, and replace the AE-08 board in the unit. • Turn on the power to the unit, and insert a self-recording/self-playback tape.	(S/N 10201 and higher) • Set SW1 (1-4 pin) of dip switches S4, 5, 6 to ON. 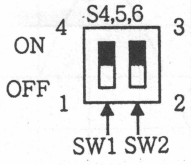 S4: CUE BIAS adjustment switch S5: CTE BIAS adjustment switch S6: TC BIAS adjustment switch	
• CTL adjustment VTR : REC • Oscilloscope 10 V/DIV TIME : 2 µS/DIV	CH1: TP25/AE-08 (H14) GND: E8/AE-08 (H14) 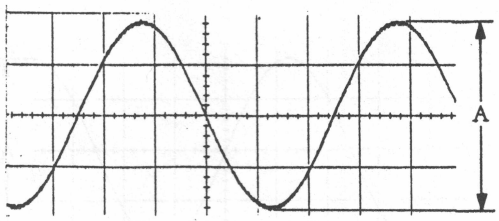 Bias level: Approx. 70.0 Vp-p	⊘ RV10/AE-08 (H14) (CTL BIAS LEVEL)

Machine conditions for adjustment	Specifications	Adjustments
• TC adjustment VTR : REC • Oscilloscope 10 V/DIV TIME : 2 μS/DIV	CH1: TP31/AE-08 (L14) GND: E10/AE-08 (N14) 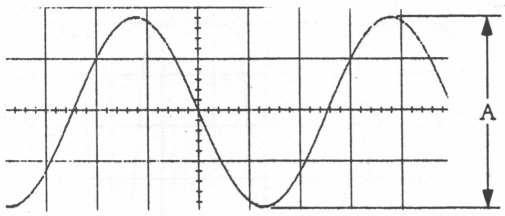 Bias level: Approx. 70.0 Vp-p	⊘ RV15/AE-08 (M14) (TC BIAS LEVEL)

Note: The CUE fine adjustment must be set at the peak bias. See a later section for details on the adjustment method.

13-5-3. Recording Level Adjustment

Machine conditions for adjustment	Specifications	Adjustments
(Preparation) • Eject the self-recording/self playback tape, and turn off the power of the unit. (S/N 10001 through 10199) • Set jumper pins JP1, 2, 3 to the IN side. 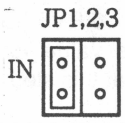 JP1: CUE BIAS adjustment jumper pin JP2: CTL BIAS adjustment jumper pin JP3: TC BIAS adjustment jumper pin • Setting, except above JP1, JP2, JP3, S4, S5, and S6, are the same as the initial setting. • Remove EX-213 extension board, and replace AE-08 board in the unit. • Turn on the power switch to the unit, and insert a self-recording/ self-playback tape.	(S/N 10201 and higher) • Set SW1 (1-4 pin) of dip switches S4, 5, 6 to ON. 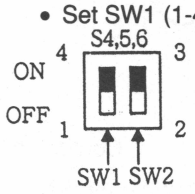 S4: CUE BIAS adjustment switch S5: CTE BIAS adjustment switch S6: TC BIAS adjustment switch	
• CTL adjustment VTR : REC → PB • Signal: free • Oscilloscope 500 mV/DIV	CH1: TP26/AE-08 (H14) GND: E8/AE-08 (H14) 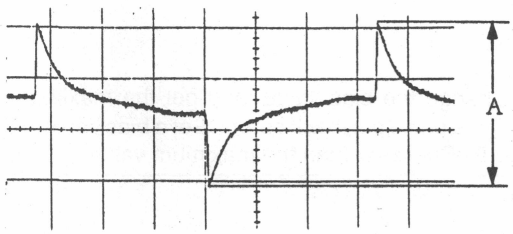 Bias level A: Approx. 1.5 Vp-p or more Note: The recording level for CTL is fixed.	⊘ RV10/AE-08 (H14) (CTL BIAS LEVEL) • Make a recording for about 30 seconds using the self-recording/self-playback tape. • Play back the recorded portion, and check that the peak bias exceeds 1.5 Vp-p. • If the peak bias does not exceed 1.5 Vp-p, adjust ⊘RV10, and repeat this step.

Machine conditions for adjustment	Specifications	Adjustments
• TC adjustment VTR : REC → PB • Signal: free • Oscilloscope 500 mV/DIV TIME : 200 µS/DIV	CH1: TP34/AE-08 (P14) GND: E10/AE-08 (N14) 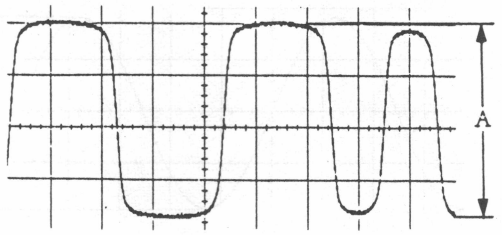 Playback level: 1.8 ±0.2 Vp-p	⊘ RV12/AE-08 (K14) (TC REC LEVEL) • Make a recording for about 30 seconds using the self-recording/self-playback tape. • Play back the recorded portion, and check that the playback level is 1.8 ±0.2 Vp-p. • If the level is not 1.8 ±0.2 Vp-p, adjust ⊘RV12, and repeat this step.
• CUE adjustment STEP-1 VTR : REC → PB • CUE IN:6.3 kHz +4dBm • Oscilloscope 20 V/DIV TIME : 2 µS/DIV	CH1: TP14/AE-08 (B14) GND: E11/AE-08 (C14) 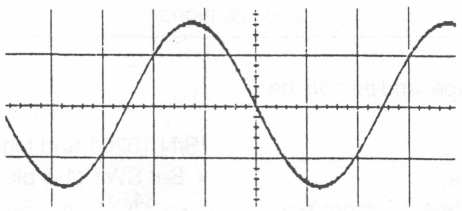 Confirm the peak bias.	⊘ RV5/AE-08 (B14) (CUE BIAS LEVEL) • Input a 6.3 KHz, +4dBm signal from the audio analyzer. • Fix the bias value to approximately 60 Vp-p, and make a recording for about 20 seconds using the self-recording/self-playback tape. • Play back the tape, and find the peak bias. If cannot finding the peak bias, turn ⊘RV5 to increase the bias value for 10 Vp-p, and repeat this step.
STEP-2 VTR : REC → PB • Oscilloscope 20 V/DIV TIME : 2µS/DIV	CH1: TP14/AE-08 (B14) GND: E11/AE-08 (C14) 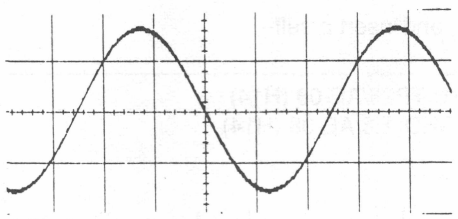 Change the bias value, and get the maximum bias value of the playback output. Set a bias value which is 0.5 dBm lower than the maximum value.	⊘ RV5/AE-08 (B14) (CUE BIAS LEVEL) • After finishing STEP-1, turn ⊘RV5, change the peak bias for ±5 Vp-p, and make a recording for about 20 seconds. • Play back the recorded portion, and find the maximum level. • Turn ⊘RV5 further to increase the bias value. Set a bias value at which the playback value is 0.5 dB lower than the above maximum level value.

Machine conditions for adjustment	Specifications	Adjustments
• Recording level adjustment • STEP-1 VTR : REC → PB (CUE signal 1 KHz, +4.0 dBm)	CN658 (CUE LINE OUT) +4.0 ±0.3 dBm	⊘ RV6/AE-08 (C14) (CUE REC LEVEL) • Make a recording of the CUE signal (1 KHz, +4.0 dBm) for about 20 seconds using the self-recording/self-playback tape. • If the level is not +4.0 ±0.3 dBm, adjust ⊘RV6 and repeat this step.
• STEP-2 VTR : REC → PB (CUE signal 10 KHz, +4.0 dBm)	CN658 (CUE LINE OUT) +4.0 ±0.3 dBm	⊘ RV7/AE-08 (C14) (CUE REC EQ) • Make a recording of the CUE signal (10 KHz, +4.0 ±0.3 dBm) for about 20 seconds using the self-recording/self-playback tape. • Turn ⊘RV7 so that the playback level of the recorded portion is +4.0 dBm.

13-6. CROSSTALK CANCELER ADJUSTMENT

Machine conditions for adjustment	Specifications	Adjustments
(Preparation) • Replace AE-08 board in the unit. • Turn on the power of the unit, and insert a self-recording /self-playback tape.		
STEP-1 (TC → CTL) VTR : REC → PB • The switch and jumper settings are the same as the 13-2-3. Initial Setting. • Oscilloscope CH1 : 200 mV/DIV TIME : 2 mS/DIV	CH1: TP26/AE-08 (H14) GND: E8/AE-08 (H14) 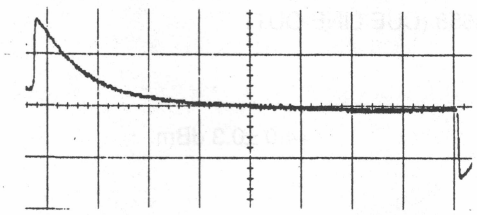 Be sure no servo slip occurs due to overlapping of the recording TC waveform on the CTL playback waveform.	⊘ RV13/AE-08 (L14) (CTC LEVEL (TC → CTL)) ⊘ RV14/AE-08 (M14) (CTC WAVE (TC → CTL)) • Make a recording for 2 minites using the self-recording/self-playback tape. Note: CUE input is No signal. • Playback the recorded portion, and insert the TC. • Change the waveform using ⊘RV14 and the level using ⊘RV13. Make adjustments so that the recorded TC waveform level overlapping the playback CTL waveform is at minimum.
STEP-2 (SERIAL No. 10201 and higher) • The switch and jumper settings are the same as STEP1. • Oscilloscope CH1 : 200 mV/DIV TIME : 2 mS/DIV	CH1: TP18/AE-08 (E14) GND: E11/AE-08 (C14) 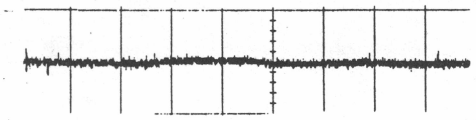 Minimize the level of recording TC waveform covered on CUE.	⊘ RV17/AE-08 (K14) (CTC LEVEL (TC → CUE)) • Make a recording for 2 minites using the self-recording/self-playback tape. Note: CUE input is No signal. • Playback the recorded portion and insert the TC. • Adjust ⊘RV17 so that rhe recorded TC waveform level overlapping the playback CTL waveform is at minimum.

SECTION 14
RF SIGNAL SYSTEM ADJUSTMENT

14-1. ADJUSTMENT ARRANGEMENT

[Adjustment flowchart (1)]
Adjustment when replacing drum or upper drum
DM-77A board is corresponded to A-CH, and DM-77B board is corresponded to B-CH.
Adjust for both A-CH and B-CH.

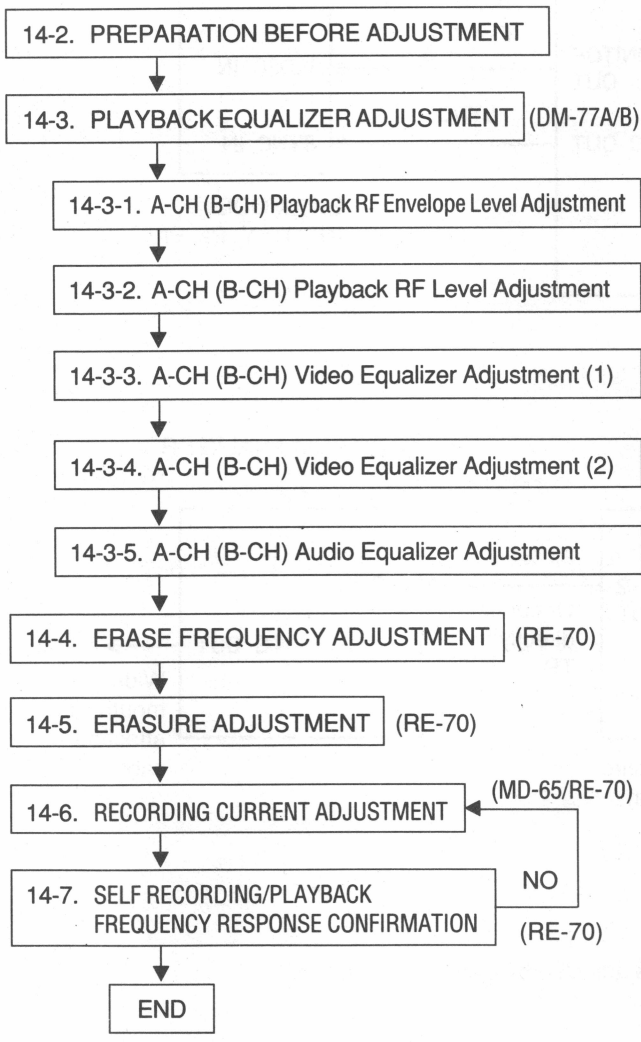

[Adjustment flowchart (2)]
When performing all adjustments because of replacing BOARD.
DM-77A board is corresponded to A-CH, and DM-77B board is corresponded to B-CH.
Adjust a replaced board.
Note *mark : Boards shipped from factory have been adjusted. Items with *mark are needed when readjusting for repair.

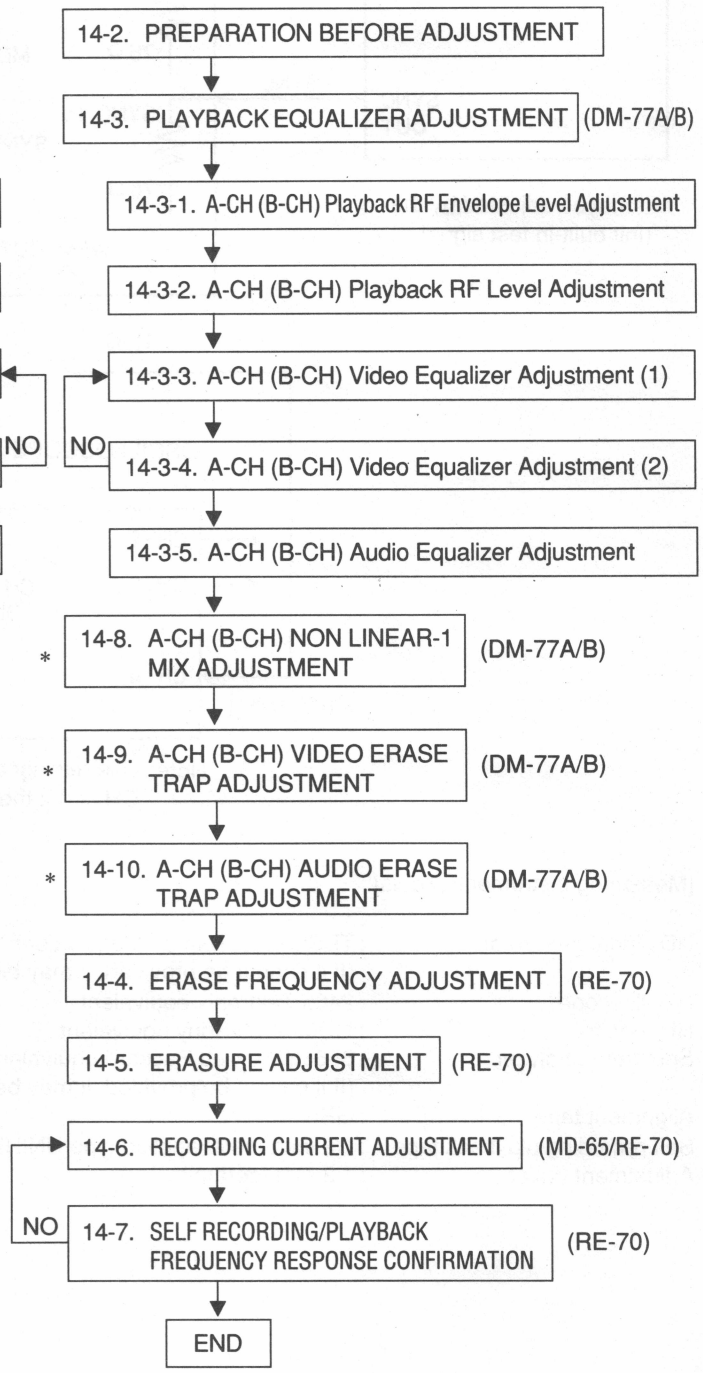

14-2. PREPARATION BEFORE ADJUSTMENT

14-2-1. Machine connection (video system)

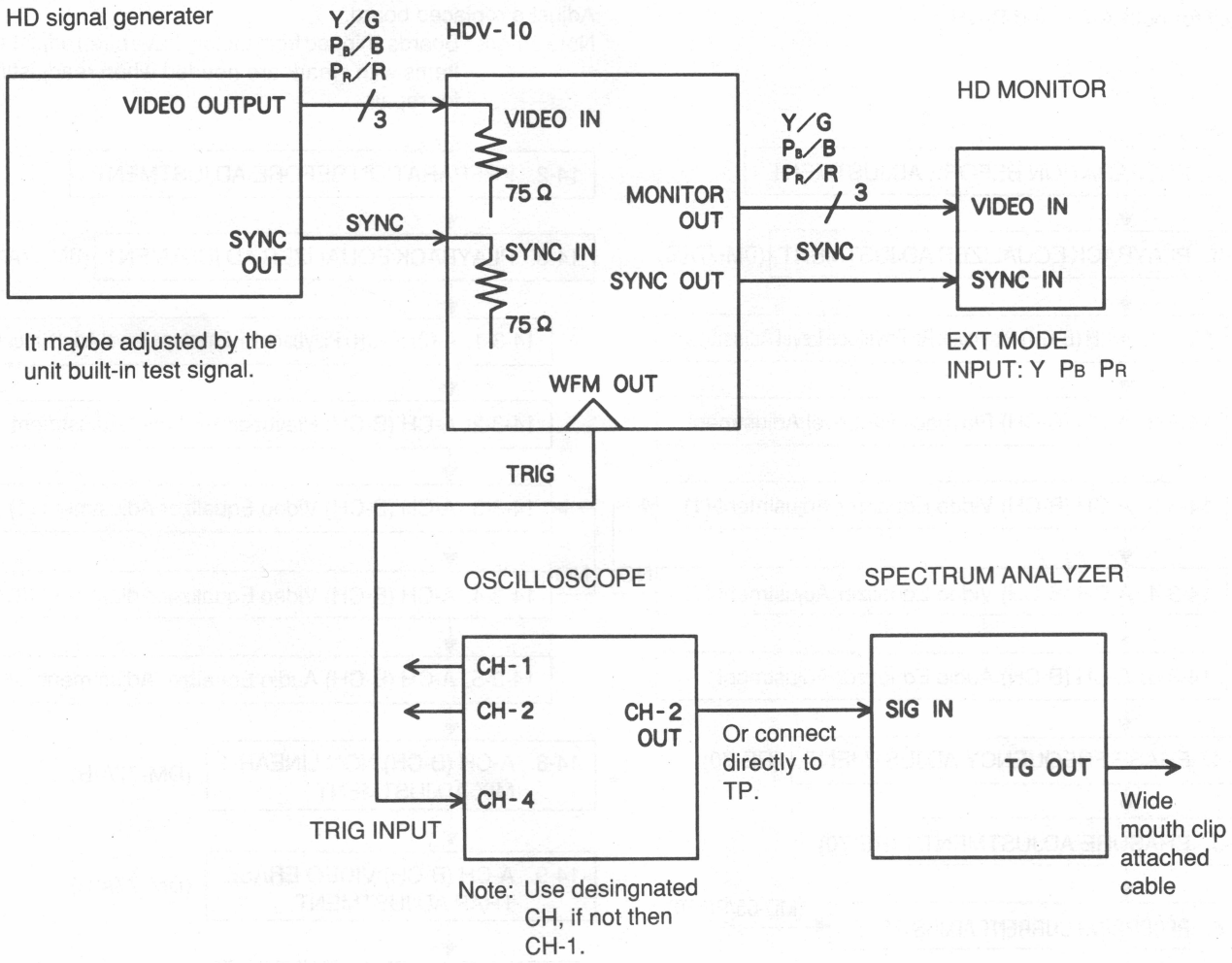

[Measuring instruments/Tools]

HD signal generator	: TESG1125/Tektronix equivalent (If it cannot be provided, it may be adjusted by built-in test signal.)
Oscilloscope	: 2465/Tektronix equivalent
HD monitor	: HDM-1220/Sony equivalent
Spectrum analyzer	: 8568B/Hewlett Packard equivalent (If it cannot be provided, it may be closely adjusted by an oscilloscope.)
Alignment tape	: GR5-1
Self recording/playback tape	: 1/2 inch metal applied type UNIHI standard cassette tape
Adjustment driver	: 1.3 mm (ceramic)

14-2-2. Location of Boards

DM-77A/B BOARD

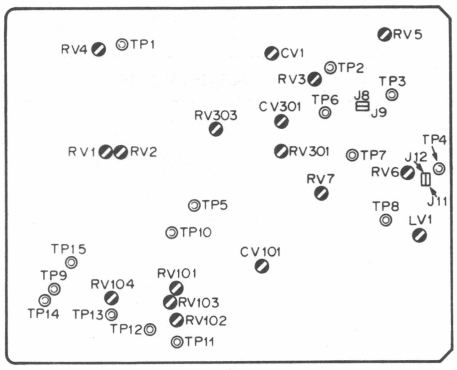

Note)
RV7 : Boards shipped from factory have been adjusted. Usually do not touch this volume.
RV303 : Mechanicalcenter

MD-65 BOARD

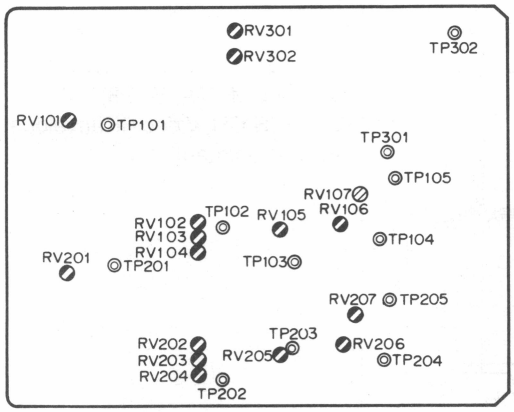

RE-70 BOARD

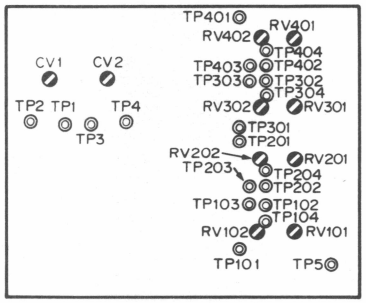

14-3. PLAYBACK EQUALIZER ADJUSTMENT (DM-77A/B)

DM-77A board is corresponded to A-CH, and DM-77B board is corresponded to B-CH.
Adjust for both A-CH and B-CH when drum replacement. Adjust a replaced board when board replacement.

14-3-1. A-CH (B-CH) Playback RF Envelope Level Adjustment

<table>
<tr><th>Machine conditions for adjustment</th><th>Specifications</th><th>Adjustments</th></tr>
<tr><td colspan="2">STEP-1

• Turn off the VTR power supply.

• Pull out DM-77A (DM-77B) board with the extension board (EX-212).

• Turn on the VTR power supply.
• Settings of Jumper plug
Same as the initial setting.
COR1 (JP8, JP9) → JP8 short
COR2 (JP11, JP12) → JP11 short

• Video control panel
Set as V RF EQ, VIDEO FREQ, A RF EQ → FIX.

• MENU S80: Set as RF LEVEL METER → RF.</td><td></td></tr>
<tr><td>STEP-2

• VTR: PLAY

• Playback the 19 MHz CARRIER part of the ALIGNMENT TAPE GR5-1.

• OSCILLOSCOPE: 0.2 V/DIV
5 mS/DIV

• TRIG: MENU T03 REF FRM
(CH-4)</td><td>CN162 pin-11C/EX-212
 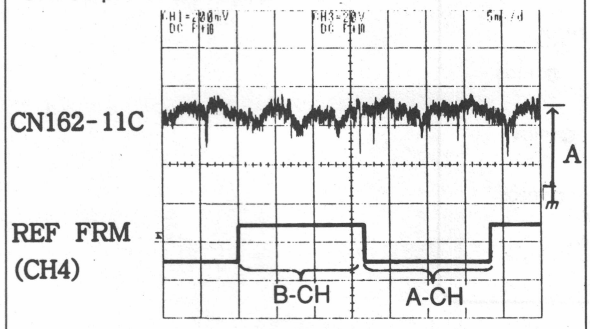

A = 500 mV dc</td><td>⊘ RV4/DM-77A, B (B8)
(A-CH (B-CH) Video RF envelope level adjustment)</td></tr>
</table>

14-3-2. A-CH (B-CH) Playback RF Level Adjustment

Machine conditions for adjustment	Specifications	Adjustments
STEP-1 • VTR: PLAY • Playback the 19 MHz CARRIER part of the ALIGNMENT TAPE GR5-1. • OSCILLOSCOPE: 0.1 V/DIV 2 mS/DIV • TRIG: MENU T03 REF FRM	TP2/DM-77A, B (C2) 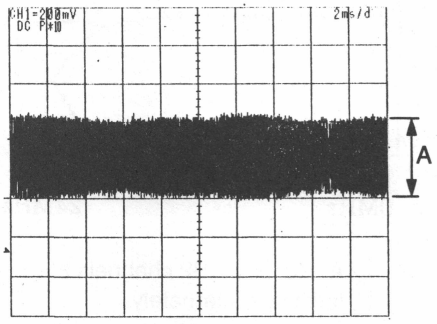 A = 600 ± 30mVp-p	⊘ RV3/DM-77A, B (B3) (A-CH (B-CH) PB RF level adjustment)
STEP-2 • Connect the oscilloscope to TP3. • OSCILLOSCOPE: 0.1/DIV 2 mS/DIV • TRIG: MENU T03 REF FRM	TP3/DM-77A, B (C2) 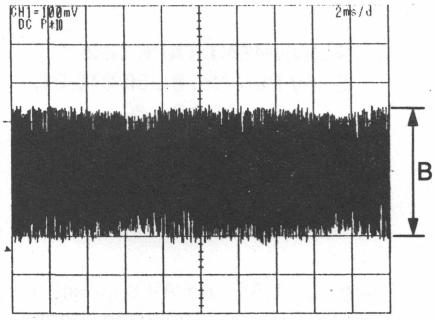 B = 400 ± 20mVp-p	⊘ RV5/DM-77A, B (A2) (A-CH (B-CH) L FREQ MIX level adjustment)

14-3-3. A-CH (B-CH) Video Equalizer Adjustment (1)

Machine conditions for adjustment	Specifications	Adjustments
STEP-1 • Settings of Jumper pin COR1 (JP8, 9) → JP9 short COR2 (JP11, 12) → JP12 short • VTR: PLAY • Playback the FIELD SWEEP part of the ALIGNMENT TAPE GR5-1. • OSCILLOSCOPE: 0.2 V/DIV 1 mS/DIV • TRIG: MENU T03 REF FRM	TP9/DM-77A, B (G9) 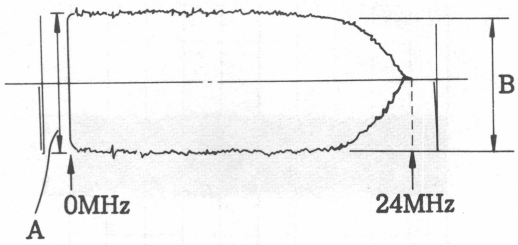 A1/A2 or B1/B2 channels are indicated alternately. When you set the 0MHz level (top figure A) as 100%, 15 MHz level (top figure B) is **ALIGNMENT TAPE GR5-1** **Sony Part No. 8-960-040-01, 02** B = 95 ± 2.5 % **ALIGNMENT TAPE GR5-1** **Sony Part No. 8-960-040-03** B = 90 ± 2.5 % And, F special of A1 and A2 channel must be the same. (The difference between the channels must be minimum)	⊘ RV1/DM-77A, B (D8) (A1-CH (B1-CH) RF EQ adjustment) ⊘ RV2/DM-77A (D8) (A2-CH (B2-CH) RF EQ adjustment)
STEP-2 • Connect the oscilloscope to VIDEO OUT Y. • And others are the same as STEP-1. • OSCILLOSCOPE: 0.1 V/DIV 2 mS/DIV • TRIG: MENU T03 REF FRM	VIDEO OUT Y/connector panel (75 Ω terminated) Difference between channels of A1/A2 or B1/B2 Difference between channels of A (A1, A2) and B (B1, B2) 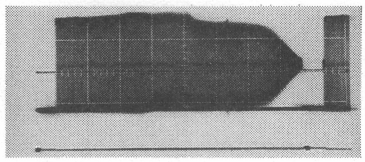 Confirm that there is no level difference between 4 channels since it is possible to observe 4 channels at once.	(Confirmation) (Difference between 4 channels) When there are level difference, perform STEP-1 again.

14-3-4. A-CH (B-CH) Video Equalizer Adjustment (2)

Machine conditions for adjustment	Specifications	Adjustments
STEP-1 • Settings of Jumper pin COR1 (JP8, 9) → JP8 short COR2 (JP11, 12) → JP11 short • VTR: PLAY • Playback the FIELD SWEEP part of the ALIGNMENT TAPE GR5-1. • OSCILLOSCOPE: 0.2 V/DIV 1 mS/DIV • TRIG: MENU T03 REF FRM	TP9/DM-77A, B (G9) 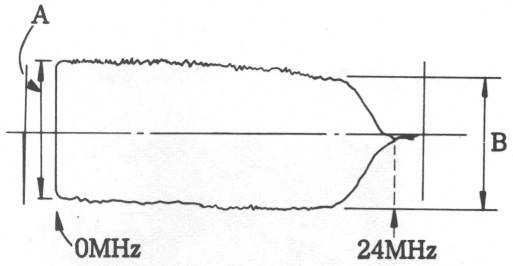 A1/A2 or B1/B2 channels are indicated alternately. When 0 MHz level(A) is set as 100%, 15 MHz level(B) must be as below: **ALIGNMENT TAPE GR5-1** **Sony Part No. 8-960-040-01, 02** B = 95 ± 2.5 % **ALIGNMENT TAPE GR5-1** **Sony Part No. 8-960-040-03** B = 90 ± 2.5 %	⊘ RV6/DM-77A, B (D2) (A-CH (B-CH) Frequency response adjustment)
STEP-2 • Connect the oscilloscope to VIDEO OUT Y. • And others are the same as STEP-1. • OSCILLOSCOPE: 0.1 V/DIV 2 mS/DIV • TRIG: MENU T03 REF FRM	VIDEO OUT Y/connector panel (75 Ω terminated) Confirm that there is no level difference between 4 channels since it is possible to observe 4 channels at once.	(Confirmation) (Difference between 4 channels) When there are level difference, perform 14-3-3. STEP-1 again.
STEP-3 • Settings of jumper pin same as STEP-1. • VTR: PLAY • Playback the 19 MHz CARRIER part of the ALIGNMENT TAPE GR5-1. • OSCILLOSCOPE: 0.1 V/DIV 2 mS/DIV • TRIG: MENU T03 REF FRM	TP2/DM-77A, B (C2) 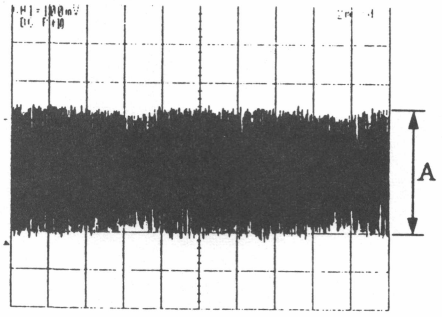 A = 600 ± 30mVp-p	(Confirmation) (A-CH (B-CH) PB RF level) When it does not satisfy the specification, adjust it with ⊘ RV3/DM-77A, B (B3).

14-3-5. A-CH (B-CH) Audio Equalizer Adjustment

Machine conditions for adjustment	Specifications	Adjustments
STEP-1 • VTR: PLAY • Playback the color bar part of the ALIGNMENT TAPE GR5-1. • A EQ SW (video control panel) must be FIX. • Adjust the tracking volume to the best point of tracking • OSCILLOSCOPE: 0.1 V/DIV 100 µS/DIV • TRIG: TP15/DM-77A, B	TP6/DM-77A, B (C3) 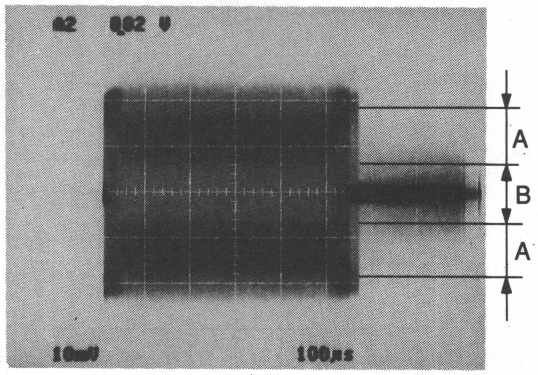 A≧B	⊘ RV301/DM-77A, B (D5) (A-CH (B-CH) audio equalizer adjustment)

Machine conditions for adjustment	Specifications	Adjustments
STEP-2 • Set TIME/DIV of the oscilloscope to 100nS/DIV. • OSCILLOSCOPE: 0.1 V/DIV 100 nS/DIV • TRIG: CH-1 INT	TP6/DM-77A, B (C3) 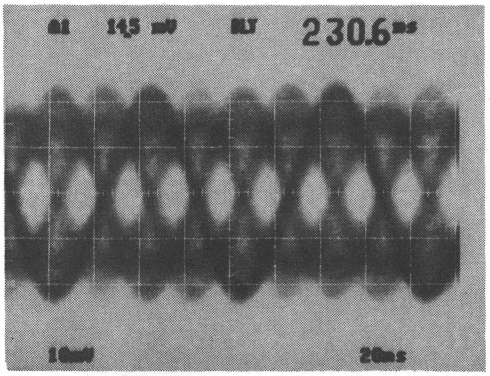 Eye pattern must be open enough.	(Confirmation) A-CH (B-CH) audio equalizer adjustment
STEP-3 • Press the tracking volume to set in pre-set state. • MENU S 80 ; RF LEVEL METER → DA ERR	Confirm that RF meter shake is more than 7 from below (reference position 2).	(Confirmation)
STEP-4 • Return MENU S80 ; RF LEVEL METER to RF. • Take out the cassette. (Eject) • Turn off the VTR power supply. • Put back DM-77A, DM-77B board as before.		

14-4. ERASE FREQUENCY ADJUSTMENT (RE-70)

① When using spectrum analyzer:

Machine conditions for adjustment	Specifications	Adjustments
STEP-1 • Turn on the VTR power supply. • Connect the spectrum analyzer to TP1 of RE-70 board.	TP1/RE-70 (E2)	⊘ CV1/RE-70 (A2) (ERS-1 frequency adjustment)
STEP-2 • VTR: STOP • MENU T16 (VIDEO REC TEST) : ON • Settings of the spectrum analizer: CENTER FREQ 35 MHz FREQ SPAN 25 MHz SWEEP 500 msec RBW 100 kHz VBW 100 kHz, 10 dB/DIV	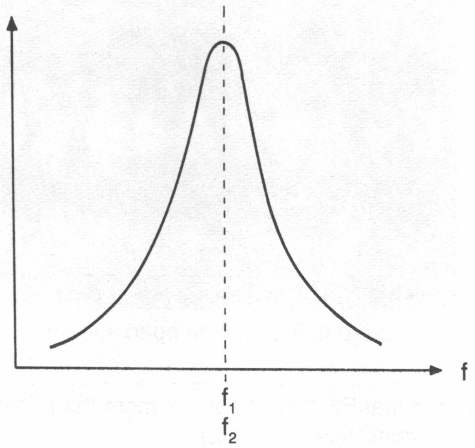 f1 = 35 ± 0.2 MHz	
STEP-3 Connect the spectrum analyzer to TP3.	TP3/RE-70 (E2) f2 = 35 ± 0.2 MHz	⊘ CV2/RE-70 (B2) (ERS-2 frequency adjustment)
STEP-4 • MENU T16: OFF		

② When spectrum analyzer is not used:

Machine conditions for adjustment	Specifications	Adjustments
STEP-1 • Turn off the VTR power supply. • Pull out DM-77A board with the extension board EX-212. • Pull out CN194, 195, 196, 197 from RE-70 board. • Turn on the VTR power supply.		
STEP-2 • VTR : VIDEO INSERT • MENU T16: ON • OSILLOSCOPE: 500 mV/DIV 2 mS/DIV • TRIG : MENU T03 REF FRM	TP2/DM-77A (B3) • Adjust ERS covering to the minimum. ERS-1 frequency becomes 35 MHz by this adjustment. f1 = 35 ± 0.2 MHz	⊘ CV1/RE-70 (A2) (ERS-1 frequency adjustment)
STEP-3 • Same as STEP-2	TP2/DM-77A (B3) • Adjust ERS covering to the minimum. ERS-2 frequency becomes 35 MHz by this adjustment. f2 = 35 ± 0.2 MHz	⊘ CV2/RE-70 (B2) (ERS-2 frequency adjustment)
STEP-4 • MENU T16: OFF • Insert CN194, 195, 196, 197/ RE-70.		

14-5. ERASURE ADJUSTMENT (RE-70)

① When using spectrum analyzer:

<table>
<tr><th>Machine conditions for adjustment</th><th>Specifications</th><th>Adjustments</th></tr>
<tr><td colspan="2">STEP-1

• Make an alignment tape.
MENU T20 (VIDEO TEST SG): ON
Set JP2 to JP1 and S3 to 8 of IPR board, and insert a self recording/playback tape.
Put VTR in REC mode, and record a test signal (for erase ratio measurement 19 MHz).
Rewind to the top after recording.
Put back JP1 to JP2 and S3 to 2 of IPR board.</td><td></td></tr>
<tr><td colspan="2">STEP-2

• Turn off the VTR power supply.

• Pull out DM-77A board with the extension board EX-212.

• Pull out CN194-CN197/RE-70.

• Connect TP1/DM-77A to the spectrum analyzer input terminal, and CN162-19-C/EX-212 to the TRIG input terminal of spectrum analyzer.

• Turn on the VTR power supply.</td><td></td></tr>
<tr><td>STEP-3

• Playback the alignment tape.

• VTR: PB

• Settings of the spectrum analyzer:
CENTER FREQ. 19 MHz
FREQ. SPAN 100 kHz
SWEEP 50 msec
RBW 100 kHz
VBW 100 kHz
10 dBm/DIV
TRIG EXT
(CN162-19C)</td><td>TP1/DM-77A (A8)
 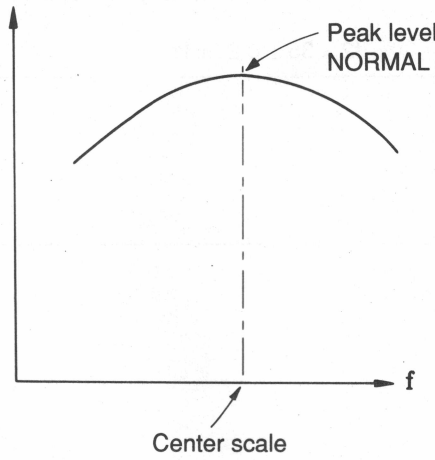

Adjust the CENTER FREQ to waveform peak above the center scale of the spectrum analyzer.</td><td>Spectrum analyzer
CENTER FREQ</td></tr>
</table>

Machine conditions for adjustment	Specifications	Adjustments
STEP-4 • FREQ. SPAN of the spectrum analyzer to 1 kHz. • Playback the alignment tape. • VTR: PB → VIDEO INSERT • Settings of the spectrum analyzer: CENTER FREQ. 19 MHz * FREQ. SPAN 1 kHz SWEEP 50 mSec RBW 100 kHz VBW 100 kHz, 10 dBm/DIV TRIG EXT (CN162-19C) * Leave it as the setting that was fine adjusted in STEP-3.	TP1/DM-77A (A8) 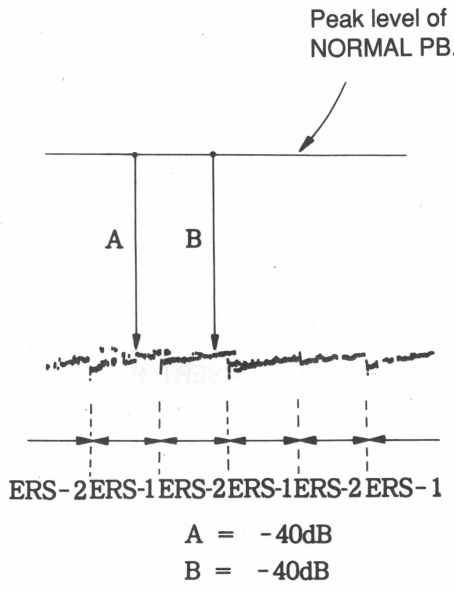 A = -40dB B = -40dB	⊘ RV1/RE-70 (A2) (ERS-1 erase ratio adjustment left figure A) ⊘ RV2/RE-70 (B2) (ERS-2 erase ratio adjustment left figure B)
STEP-5 • Set VTR in STOP mode. • Turn off the VTR power supply, and put back DM-77A board as before. • Insert CN194-CN197/RE-70 as before.		

② When spectrum analyzer is not used:

Machine conditions for adjustment	Specifications	Adjustments
STEP-1 • Make an alignment tape. It is the same as when using the spectrum analyzer.		
STEP-2 • Turn off the VTR power supply. • Pull out DM 77A board with the extension board EX-212. • Pull out CN194 to CN197/RE-70. • Turn on the VTR power supply.		
STEP-3 • Connect the oscilloscope to TP indicated in the right. • VTR: PB → VIDEO INSERT ① Playback the alignment tape. Confirm a playback level A of TP1. ② After executing VIDEO INSERT, playback to confirm playback level B of TP1. • OSCILLOSCOPE: ① 500 mV/DIV ② 50 mV/DIV 2 mS/DIV • TRIG: TP15 OR MENU T03 REF FRM	TP1/DM-77A (A8) ① Playback level: A ② A level when VIDEO INSERT: B $20 \log \frac{B}{A} \leqq -40$ (When A=1Vp-p, below B=10mVp-p)	⊘ RV1/RE-70 (A2) (ERS-1 erase ratio adjustment) ⊘ RV2/RE-70 (B2) (ERS-2 erase ratio adjustment)
STEP-4 • Set VTR in STOP mode. • Turn off the VTR power supply, and put back DM-77A board as before. • Connect CN194-CN197/RE-70.		

14-6. RECORDING CURRENT ADJUSTMENT (MD-65/RE-70)

<table>
<tr><th>Machine conditions for adjustment</th><th>Specifications</th><th>Adjustments</th></tr>
<tr><td>STEP-1 (Confirmation)

• VTR: REC

• TEST SG: BLACK FIELD
(Y, PB, PR)

• Use a self recording/playback tape, and set VTR in REC mode.

• OSCILLOSCOPE: 0.2 V/DIV
2 mS/DIV

• TRIG: MENU T03 REF FRM</td><td>CN193 pin 11A or 11B/RE-70 (C5) .... A-CH
CN193 pin 15A or 15B/RE-70 (C5) .... B-CH

 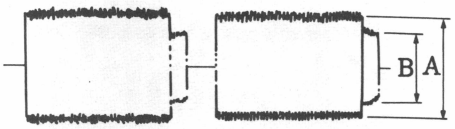

Video RF level A = 1.00 Vp-p
Audio RF level B = 700 mVp-p</td><td>(Confirmation)
If it does not satisfy the specifications, pull out MD-65 board with RE-70 board using an extension board EX-212, and adjust followings.
Left figure A
Video RF level adjustment
A-CH
⊘ RV107/MD-65 (H5)
B-CH
⊘ RV207/MD-65 (N5)
Left figure B
Audio RF level adjustment
A-CH
⊘ RV301/MD-65 (A8)
B-CH
⊘ RV302/MD-65 (B8)</td></tr>
<tr><td colspan="2">STEP-2

• STOP the VTR.

• Turn off the VTR power supply, pull out DM-77 board (DM-77B board) with an extension board (EX-212).

• Turn on the VTR power supply.</td><td></td></tr>
<tr><td>STEP-3

• VTR: REC CONFI
Other settings are the same as STEP-1.

• OSCILLOSCOPE: 0.2 V/DIV
2 mS/DIV

• TRIG: MENU T03 REF FRM</td><td>TP1/DM-77A (A8) A1, A2-CH
TP1/DM-77B (A8) B1, B2-CH

 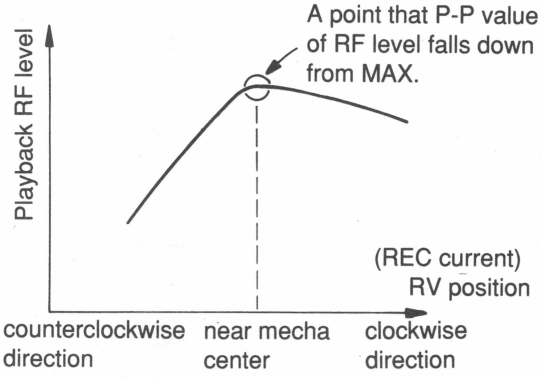

Adjust with each volume of RE-70 board at where P-P value of RF level falls down from MAX.</td><td>Video REC current adjustment
A1-CH
⊘ RV102/RE-70 (E3)
A2-CH
⊘ RV202/RE-70 (E4)
B1-CH
⊘ RV302/RE-70 (E2)
B2-CH
⊘ RV402/RE-70 (E1)

After adjustment, confirm that each volume is near mecha center.</td></tr>
<tr><td colspan="2">STEP-4

• STOP the VTR.

• Turn off the VTR power supply, and put back DM-77A, DM-77B board as before.</td><td></td></tr>
</table>

14-7. SELF RECORDING/PLAYBACK FREQUENCY RESPONSE CONFIRMATION

Machine conditions for adjustment	Specifications	Adjustments
STEP-1 (Confirmation) • TEST SG: FIELD SWEEP If it cannot be provided, MENU T20 → MB (MULTI BURST) • VTR: REC → PLAY Use a self recording/playback tape, and REC → PB. • OSCILLOSCOPE: [When FIELD SWEEP] 0.1 V/DIV, 2 mS/DIV TRIG: MENU T03 REF FRM [When MULTI BURST] 0.1 V/DIV, 2 µS/DIV Time axis adjustment • TRIG: TP7/SG-169 (E1) REF HD	VIDEO OUT Y/connector panel (75 Ω terminated) 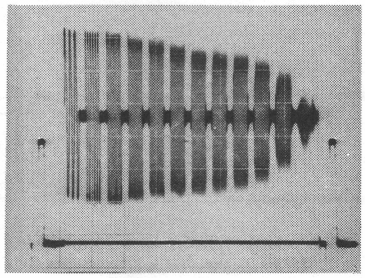 Waveform is when MULTI BURST When FIELD SWEEP: Leave it as the left colum is indicated. When MULTI BURST: Adjust until waveform is observed breaks by turning a variable nob of the oscilloscope in the direction that time axis becomes faster. By above operation, 4 channels are possible to be observed at once. Confirm that there is no level difference between 4 channels.	(Confirmation) (Self recording/playback 4CH level difference) When there is a level difference between 4 CH, perform the recording current frequency response adjustment of STEP-2 and later.
STEP-2 Recording current frequency response adjustment (If it was OK in STEP-1, it is unnecessary.) • TEST SG: Same as STEP-1 • VTR: REC CONFI • OSCILLOSCOPE: Same as STEP-1	VIDEO OUT Y/connector panel (75 Ω terminated) Find the channel with level difference by pulling out CN194-CN197 of RE-70 board one by one. CN194: A1-CH, CN196: B1-CH CN195: A2-CH, CN197: B2-CH	
STEP-3 • Turn off the VTR power supply. • Pull out the following boards from CH with level difference using an extension board (EX-212). CH with level difference → Board to be pulled out A1-CH, A2-CH → DM-77A board B1-CH, B2-CH → DM-77B board • Turn on the VTR power supply.		

Machine conditions for adjustment	Specifications	Adjustments
STEP-4 • TEST SG: Same as STEP-1 • VTR: REC CONFI • OSCILLOSCOPE: [When / FIELD SWEEP] 0.2 V/DIV / 1 mS/DIV TRIG: MENU T03 REF FRM [When / MULTI BURST] 0.2 V/DIV / 10 µS/DIV TRIG: CH1 (TP9)	TP9/DM-77A, B (G9) 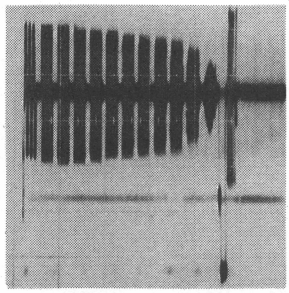 Waveform is when MULTI BURST Frequency response of A1 (B1) and A1 (B2) channel must be the same. (The level difference between channels must be minimum.)	Adjust the following RE-70 board volumes on channels with level difference. A1-CH ⊘ RV101/RE-70 (E4) A2-CH ⊘ RV201/RE-70 (E3) B1-CH ⊘ RV301/RE-70 (E2) B2-CH ⊘ RV401/RE-70 (E1)
STEP-5 • Connect the oscilloscope to VIDEO OUT Y. • Others are same as STEP-1. • OSCILLOSCOPE: Same as STEP-1	VIDEO OUT Y/connector panel (75 Ω terminated) Confirm that there is no level difference between 4 CH.	(Confirmation) (Level difference between 4CH) When there is a level difference, perform STEP-2 to STEP-4 again.
STEP-6 • Perform STEP-2 and later in 14-6. RECORDING CURRENT ADJUSTMENT again.		

14-8. A-CH (B-CH) NON LINEAR-1 MIX ADJUSTMENT (DM-77A/B)

Note: When readjustment is needed because of DM-77A, B board repair, perform the following adjustment.

Machine conditions for adjustment	Specifications	Adjustments
STEP-1 • Turn off the VTR power supply. • Pull out DM-77A board using an extension board (EX-212). • Turn on the VTR power supply. • Settings of jumper pin: Same as initial setting.		
• VTR: EE • TEST SIGNAL: Color bars (Y, P_B, P_R) • When a signal generator cannot be provided MENU T20: VIDEO TEST SG → CB • OSCILLOSCOPE: 0.2 V/DIV, 2 µS/DIV • TRIG : MENU T03 PBH	TP14/DM-77A, B (G10) 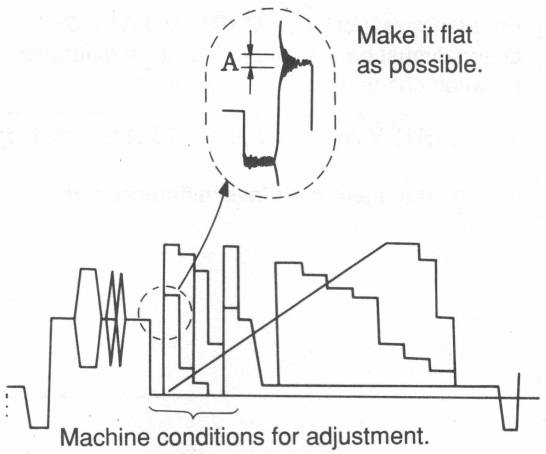 Machine conditions for adjustment. The section between P_B/P_R signal. A = minimum (Reference value: A ≦ 50 mV)	◐ RV104/DM-77A, B (G8) (The section between P_B/P_R signal streaking adjustment)

14-9. A-CH (B-CH) VIDEO ERASE TRAP ADJUSTMENT (DM-77A/B)

Note: When replacing L9 or CV1 of DM-77A, B board, perform the following adjustment when readjustment is needed.

① **When using spectrum analyzer**

<table>
<tr><th>Machine conditions for adjustment</th><th>Specifications</th><th>Adjustments</th></tr>
<tr><td colspan="2">STEP-1

• Turn off the VTR power supply.

• Pull out DM-77A, B board using an extension board EX-212.

• Turn on the VTR power supply.

• Using a cable with wide mouth clip to connect TG OUTPUT of the spectrum analyzer with CN162-24A/DM-77A, B and CN162-26A/DM-77A, B. (No polarization)

• Remove any cassette.</td><td></td></tr>
<tr><td>STEP-2

• VTR: STOP

• MENU T16 (VIDEO REC TEST): ON

• TEST SIGNAL: BLACK FIELD (Y, PB, PR)

• Settings of the spectrum analizer:
RBW: 100 kHz
VBW: 10 kHz
SWEEP: 100 msec
START FREQ.: 0 Hz
STOP FREQ.: 50 MHz,
10 dBm/DIV
TG LEVEL: –20 dBm</td><td>Spectrum analyzer: TP2/DM-77A, B (C2)

 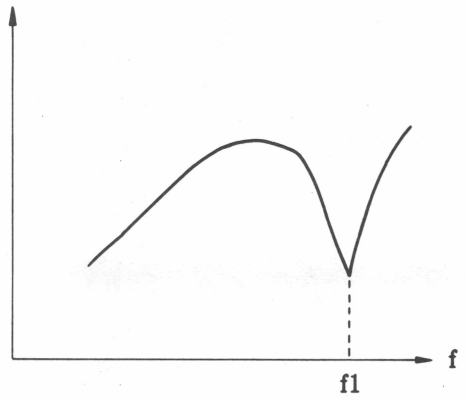

f1 = 35 ± 1MHz</td><td>⊘ CV1/DM-77A, B (A5)
(A-CH (B-CH) video erase trap adjustment)</td></tr>
<tr><td colspan="2">STEP-3

• MENU T16 (VIDEO REC TEST): OFF</td><td></td></tr>
</table>

② **When not using spectrum analyzer**

Machine conditions for adjustment	Specifications	Adjustments
STEP-1 • Pull out DM-77A, B board using an extension board EX-212. • Turn on the VTR power supply. • Remove any cassette.		
STEP-2 • VTR: STOP • MENU T16: ON • TEST SIGNAL: NON • Pull out CN194-CN197/RE-70. • OSCILLOSCOPE: 50mV/DIV 50nS/DIV	TP2/DM-77A, B (C2) 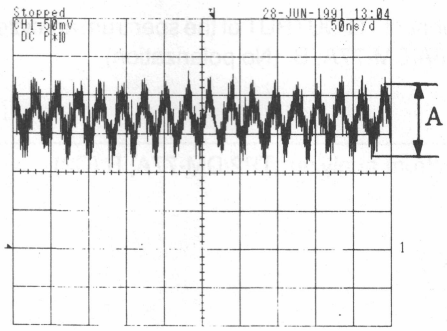 • After adjustment ⇩ 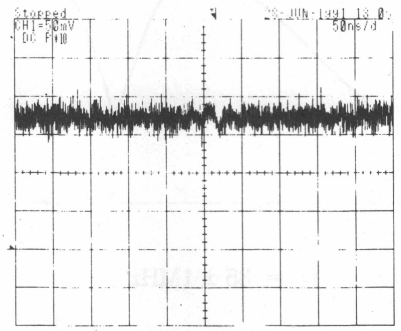 Adjust to minimize A (35 MHz component)	⊘ CV1/DM-77A, B (A5) (A-CH (B-CH) video erase trap adjustment)
STEP-3 • MENU T16 (VIDEO REC TEST): OFF		

14-10. A-CH (B-CH) AUDIO ERASE TRAP ADJUSTMENT (DM-77A/B)

Note: When replacing L305 or CV301 of DM-77A, B board, perform the following adjustment when readjustment is needed.

<table>
<tr><th>Machine conditions for adjustment</th><th>Specifications</th><th>Adjustments</th></tr>
<tr><td colspan="2">STEP-1

• Turn off the VTR power supply.

• Pull out DM-77A, B board using an extension board EX-212.

• Turn on the VTR power supply.

• Using a cable with wide mouth clip to connect TG OUTPUT of the spectrum analyzer with CN162-22A (a core line)/DM-77A, B and CN162-20A (GND)/DM-77A, B. (No polarization)

• Remove any cassette.</td><td></td></tr>
<tr><td>STEP-2

• VTR: STOP
MENU T16: ON

• TEST SIGNAL: NONE

• Short between the following connectors of DM-77A, B board.
CN162-14C ↔ GND
CN162-22C ↔ GND

• Settings of the spectrum analizer:
RBW: 100 kHz
VBW: 10 kHz
SWEEP: 100 msec
START FREQ.: 0 Hz
STOP FREQ.: 50 MHz,
10 dBm/DIV
TG LEVEL: –20 dBm</td><td>Spectrum analyzer: TP6/DM-77A, B (C3)

 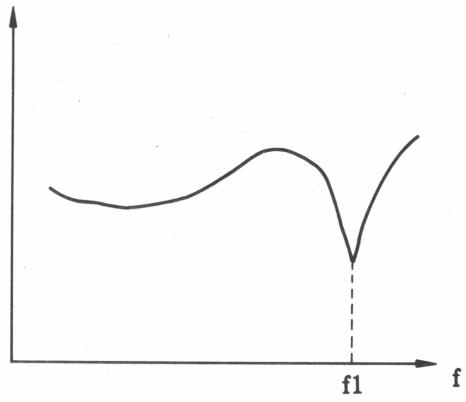

f1 = 35 ± 1 MHz</td><td>● CV301/DM-77A, B (C5)
(A-CH (B-CH) audio erase trap adjustment)</td></tr>
<tr><td colspan="2">STEP-3

• Open between the following connectors of DM-77A board.
CN162-14C ↔ GND
CN162-22C ↔ GND

• MENU T16: OFF

• Remove the cable.

• Turn off the VTR power supply, and put back DM-77A, B board as before.</td><td></td></tr>
</table>

SECTION 15
VIDEO SIGNAL SYSTEM ADJUSTMENT

15-1. VIDEO SIGNAL SYSTEM ADJUSTMENT BASIC KNOWLEDGE

15-1-1. Video System Board Adjustment

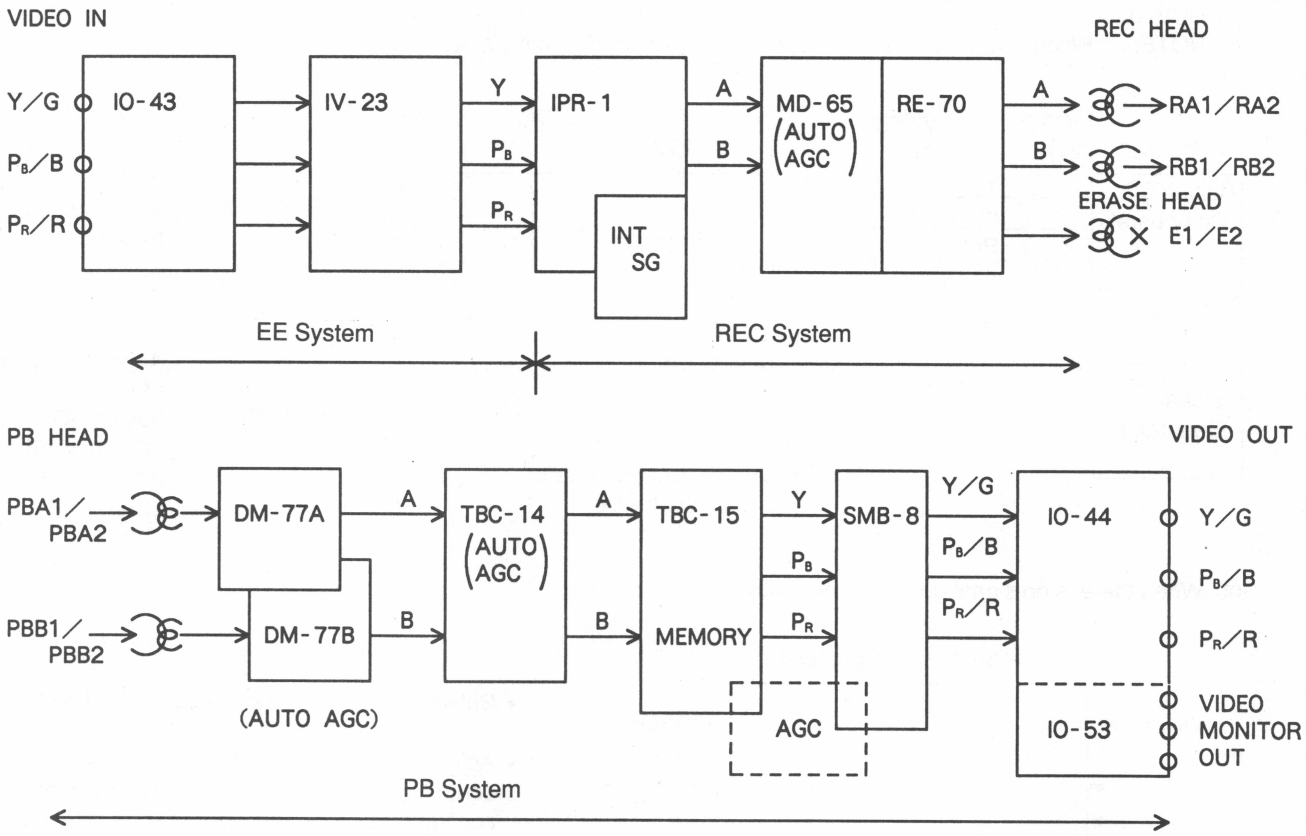

NOTE: 1. MD-65, DM-77 and TBC-14 boards are adjusted by AUTO AGC automatically.
2. AGC loop is in between TBC-15 and SMB-8 boards.
3. As for signal level adjustment, adjust to minimize the level difference among three channels. (A target value: the level difference among three channels ± 2%)
4. Y, P_B and P_R signals are the reference of adjustment. (G, B and R signals are for confirmation.)

15-1-2. Adjustment Method

1. Perform adjustment of the REC and PB systems of former page with built-in SG (color bars) of IPR-1 board.

2. Adjustment of EE system
   ① When there is a signal generator (TSG-1125/Tektronix or TG91C6/SHIBASOKU) or another HDV-10.
   NOTE: When using HDV-10 as a signal generator, confirm the NOTE in ②.

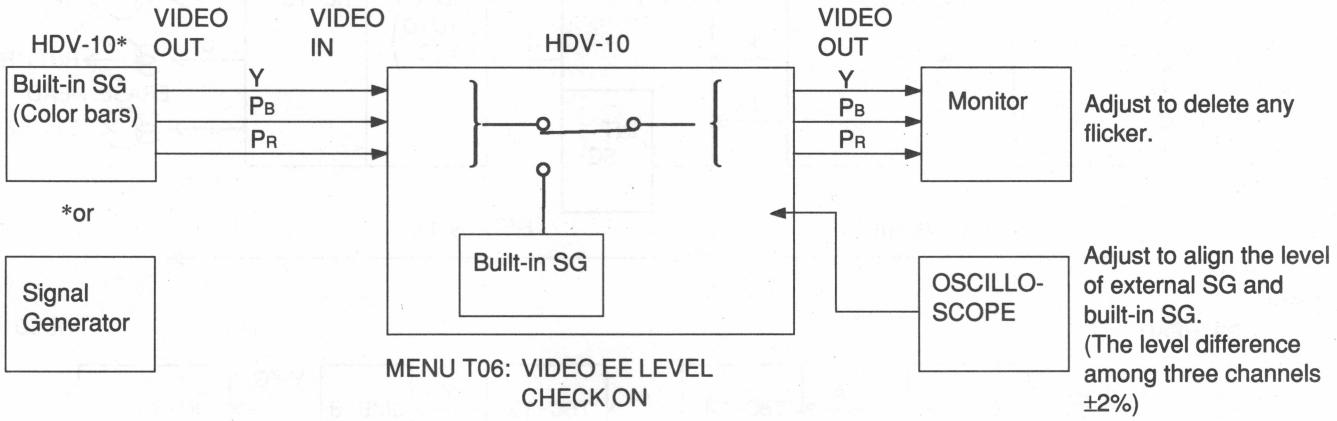

② When there is no signal generator or another HDV-10.

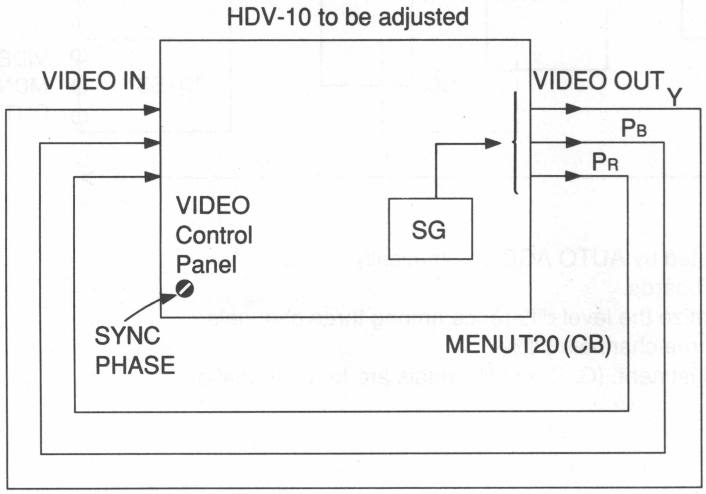

- Select CB at MENU T20 (VIDEO TEST SG).
- Adjust so that SYNC PHASE control knob of video control panel locks D2 and D3 of SG-169 board. Or, confirm that it locks on FIX.

  Then, the built-in SG is ready to use.

NOTE:
- Use it after confirming the level of VIDEO OUT connector. (700±3mV)
- Confirm that there is no level difference among channels, especially.

15-1-3. Failure Diagnosis

① Confirm PB system by playing back an alignment tape. If there is no abnormality, then it is EE and REC systems' problem.
② Confirm REC system by built-in SG. If there is no abnormality, then it is EE system problem.
③ Confirm EE system by the method of Section 15-1-2.

15-2. ADJUSTMENT SEQUENCE

15-3. Adjustment Preparation

↓

15-4. INT Oscillation Frequency Adjustment

↓

15-5. 38.08M PLL Adjustment

↓

15-6. 22M PLL Adjustment

↓

15-7. 16M PLL Adjustment

↓

15-8. Y DL PLL Adjustment

↓

15-9. Video Input Level Adjustment (AGC OFF)

↓

15-10. Video Input Level Adjustment (AGC ON)

↓

15-11. AD Video Level Adjustment
(When Inputting Y, P_B, P_R)

↓

15-12. Input Matrix Adjustment

↓

15-13. AD Video Level Adjustment
(When Inputting GBR)

↓

15-14. Y Waveform Distortion Adjustment

↓

15-15. P_B/P_R Waveform Distortion Adjustment

↓

15-16. DLC Level Confirmation

↓

15-17. DLC Level Adjustment

↓

15-18. AD Video Offset Adjustment

↓

15-19. AD Video Y Level Adjustment

↓

Ⓐ

Ⓐ

↓

15-20. AD Video P_B/P_R Level Adjustment

↓

15-21. DA Video Level Adjustment

↓

15-22. A-CH Non-linear Video Level Adjustment

↓

15-23. B-CH Non-linear Video Level Adjustment

↓

15-24. Non-linear Emphasis Adjustment

↓

15-25. A-CH DEM EE Adjustment (1),(2)

↓

15-26. B-CH DEM EE Adjustment (1),(2)

↓

15-27. WFM Output Offset Adjustment

↓

15-28. SYNC AGC Adjustment

↓

15-29. DA Y Level/Offset Adjustment

↓

15-30. DA P_B Level/Offset Adjustment

↓

15-31. DA P_R Level/Offset Adjustment

↓

15-32. SMB Output Offset Adjustment

↓

15-33. SMB Output Level Y/G Adjustment

↓

15-34. Output Matrix Adjustment

↓

15-35. SMB Output Level P_B/B Adjustment

↓

15-36. SMB Output Level P_R/R Adjustment

↓

Ⓑ

Ⓑ

15-37. Video Output Level Adjustment

15-38. Video Output PB/B Adjustment

15-39. Video Output PR/R Adjustment

15-40. SYNC Output Adjustment

15-41. Y/C Delay PLL Adjustment

15-42. WFM Output Level Adjustment

15-43. WFM Output Offset Adjustment

15-44. Sampling Phase Adjustment

15-45. Velocity Error Level Adjustment

15-46. Velocity Error Offset Adjustment

15-47. Velocity Error Correction Adjustment

15-48. SYNC Phase Preset Adjustment

15-49. Video Phase Adjustment

15-50. Analog Blanking Adjustment

15-51. Y/C Phase Adjustment

15-52. PB/PR Phase Adjustment

15-53. Y Phase Adjustment

15-54. Y/C Delay Adjustment (1),(2),(3)

15-3. ADJUSTMENT PREPARATION

15-3-1. Connection

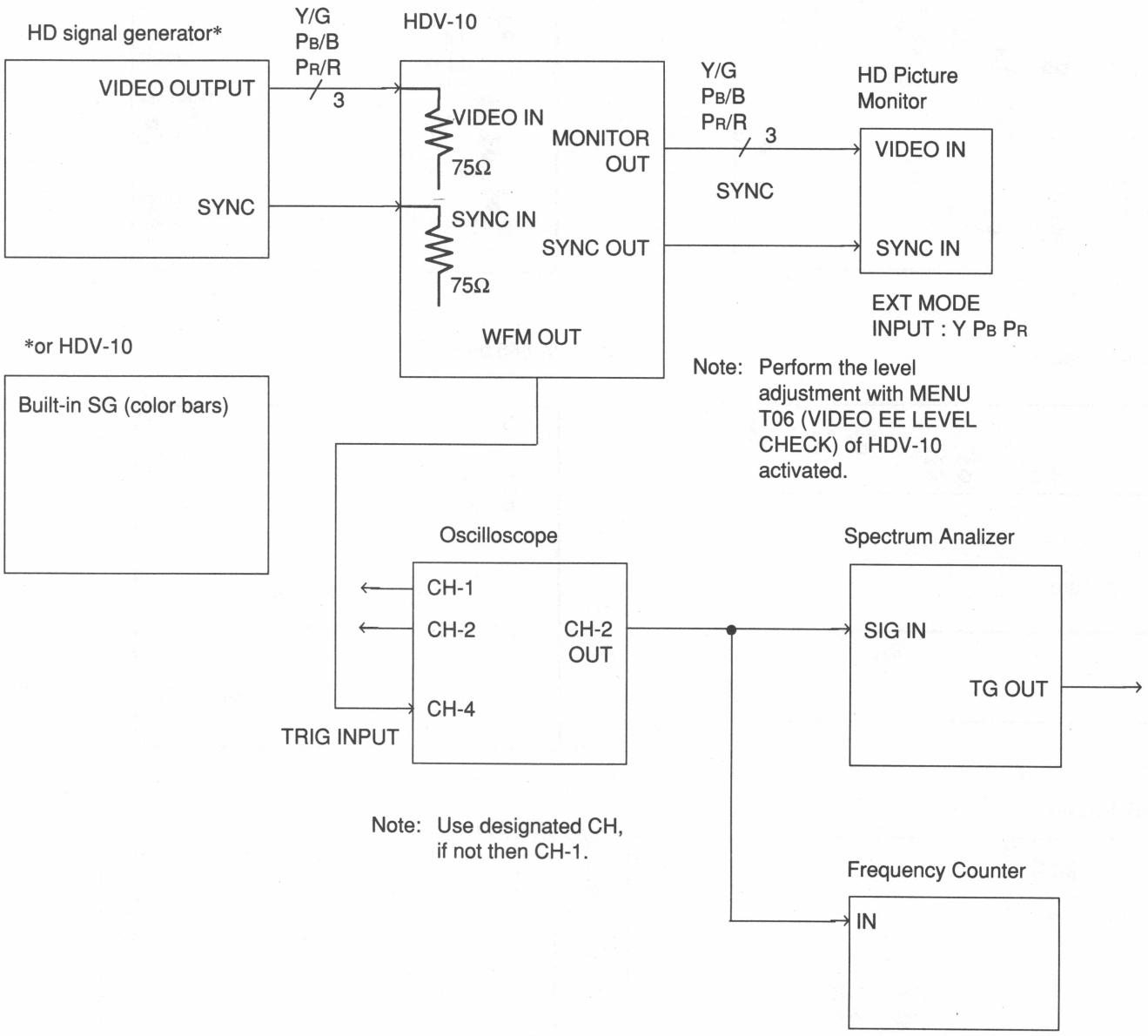

[Measuring instruments/Tools]

HD signal generator	: Equivalent TSG1125/Sony Tektronix or HDV-10
HD picture monitor	: Equivalent HDM-1220/Sony
Oscilloscope	: Equivalent 2465B/Sony Tektronix
Spectrum analyzer	: Equivalent 141T/Hewlett Packard
Frequency counter	: Equivalent 5313/Hewlett Packard
Adjustment driver	: 1.3mm (ceramic) Sony parts No. 7-721-052-81

15-3-2. Locations of Adjustments and Test Points

DM-77 board

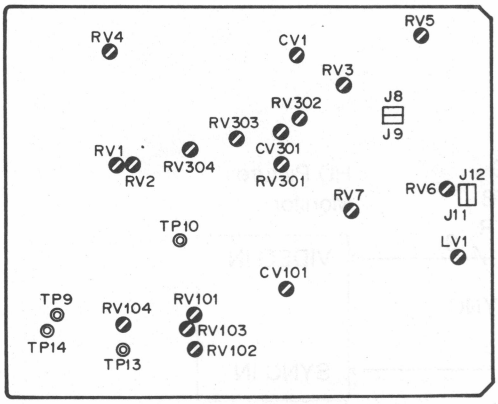

IV-23 board

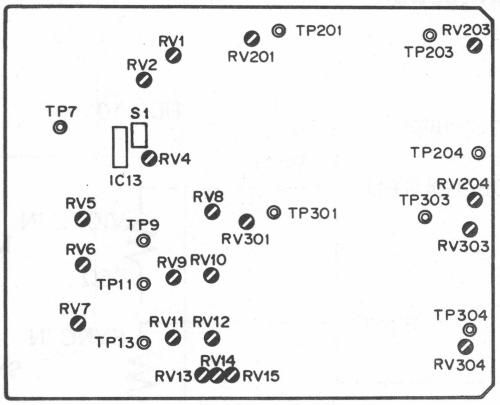

IO-44 board

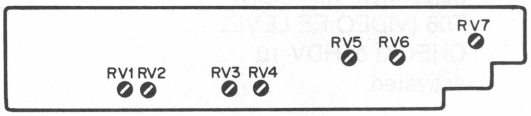

IO-53 board

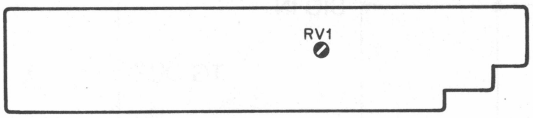

IPR-1 board

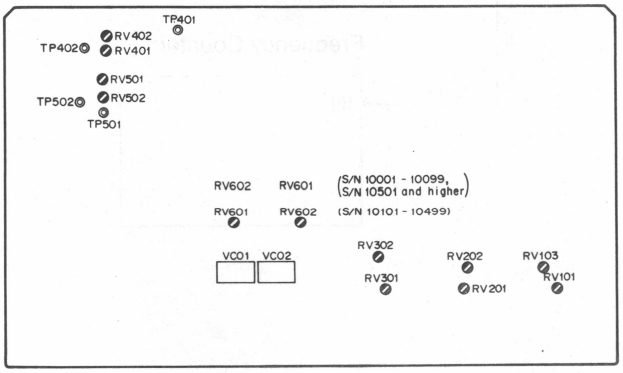

MD-65 board

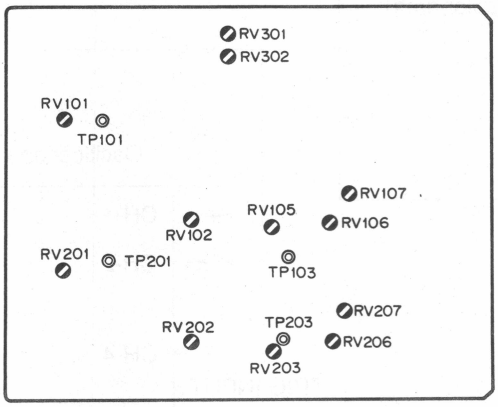

SG-169 board

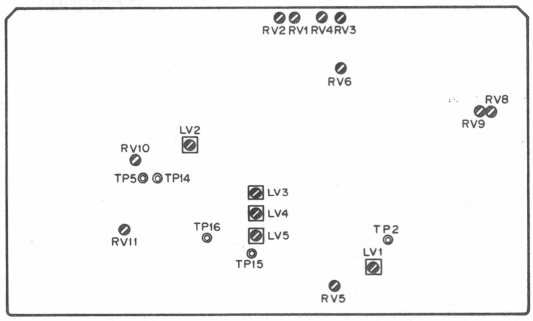

SMB-8 board

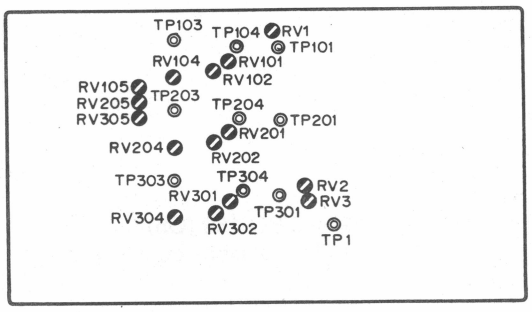

TBC-14 board

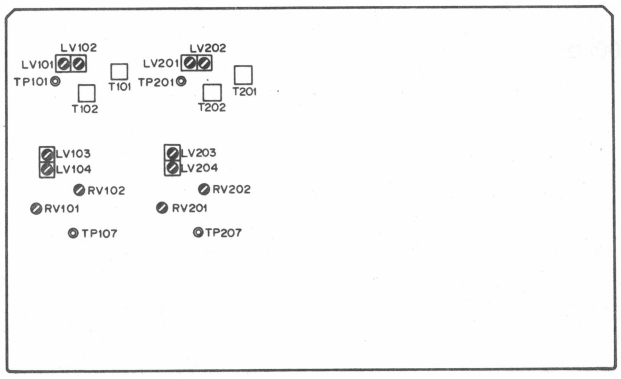

TBC-15 board

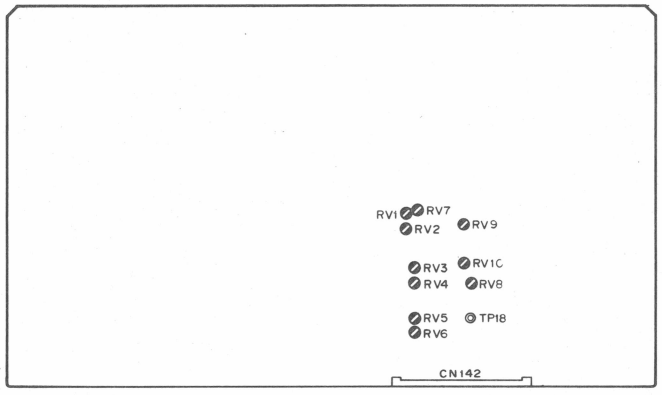

15-4. INT OSCILLATION FREQUENCY ADJUSTMEMT

Machine conditions for adjustment	Specifications	Adjustments
STEP-1 • Turn off VTR. • Pull out SG-169 board using extension board EX-211. • VTR: EE • TEST SG: Color bars (Y, P_B, P_R) • Disconnect VIDEO INPUT Y/G. • Connect to frequency counter with oscilloscope CH2 OUT. • OSCILLOSCOPE: 0.1V/DIV 20nS/DIV • TRIG : CH-2	CH-2: CN131-13C (Q18) f=48.6MHz±100Hz	⊘RV8/SG-169 (Q5) (INT oscillation frequency adjustment)
STEP-2 • Turn off VTR. Then, turn on S1-1/ED-23 (K5). • Turn on VTR .	CH-2: CN131-13C (Q18) f=48.5514MHz±100Hz	⊘RV9/SG-169 (P5) (INT oscillation frequency adjustment)
STEP-3 • Turn off VTR. Then, turn off S1-1/ED-23 (K5) again. • Connect the VIDEO INPUT Y/G-CH INPUT same as before. • Turn on VTR.		

15-5. 38.08M PLL ADJUSTMENT

Machine conditions for adjustment	Specifications	Adjustments
• VTR: EE • TEST SG: Color bars • OSCILLOSCOPE: 0.2V/DIV 50nS/DIV • TRIG: CH-1	TP14/SG-169 (E9) A = 1.2± 0.2Vdc	⊘LV3/SG-169 (H10) (38.08M PLL adjustment)

15-6. 22M PLL ADJUSTMENT

Machine conditions for adjustment	Specifications	Adjustments
• VTR: EE • TEST SG: Color bars • OSCILLOSCOPE: 0.2V/DIV 50nS/DIV • TRIG: CH-1	TP15/SG-169 (H14) A = 1.2± 0.2Vdc	⊘LV4/SG-169 (H11) (22M PLL adjustment)

15-7. 16M PLL ADJUSTMENT

Machine conditions for adjustment	Specifications	Adjustments
• VTR: EE • TEST SG: Color bars • OSCILLOSCOPE: 0.2V/DIV 50nS/DIV • TRIG: CH-1	TP16/SG-169 (G13) A = 1.2± 0.2Vdc	⊘LV5/SG-169 (H12) (16M PLL adjustment)

15-8. Y DL PLL ADJUSTMENT

Machine conditions for adjustment	Specifications	Adjustments
• VTR: EE • TEST SG: Color bars • Turn ⊘RV3/SG-169 (K1) fully counterclockwise. • OSCILLOSCOPE: 1V/DIV 10nS/DIV • TRIG: CH-1	TP2/SG-169 (M14) 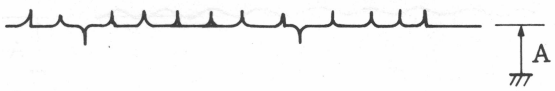 A = 6.0± 0.2Vdc	⊘LV1/SG-169 (L15) (Y DL PLL adjustment) Readjust ⊘RV3 by the velocity error adjustment.

15-9. VIDEO INPUT LEVEL ADJUSTMEMT (AGC OFF)

Machine conditions for adjustment	Specifications	Adjustments
STEP-1 • VTR: EE • TEST SG: Color bars (Y, P_B, P_R) • AGC: DISABLE • OSCILLOSCOPE: 0.2V/DIV 5μS/DIV • TRIG: MENU T03 "REF HD"	TP9/IV-23 (D6) 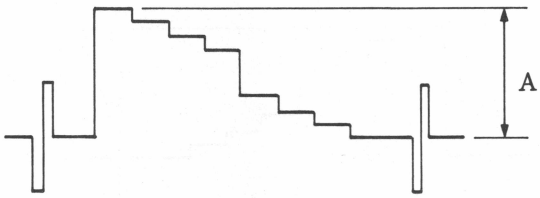 A=700±2mV	⊘RV13/IV-23 (G5) (Y signal input level adjustment)
STEP-2 • Same as STEP-1	TP11/IV-23 (E6) 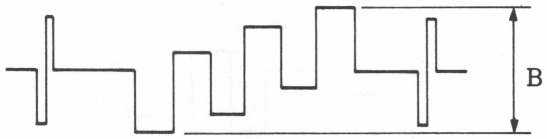 B=700±2mV	⊘RV14/IV-23 (G5) (P_B signal input level adjustment)
STEP-3 • Same as STEP-1	TP13/IV-23 (F6) 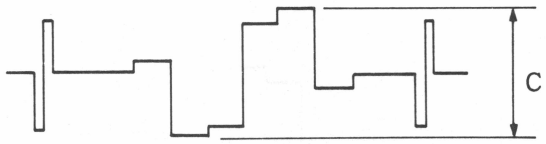 C=700±2mV	⊘RV15/IV-23 (G5) (P_R signal input level adjustment)

15-10. VIDEO INPUT LEVEL ADJUSTMEMT (AGC ON)

Machine conditions for adjustment	Specifications	Adjustments
STEP-1 • VTR: EE • TEST SG: Color bars (Y, P_B, P_R) • MENU E08 (INPUT VIDEO AGC): ENABLE • OSCILLOSCOPE: 0.2V/DIV 5µS/DIV • TRIG: MENU T03 "REF HD"	TP9/IV-23 (D6) 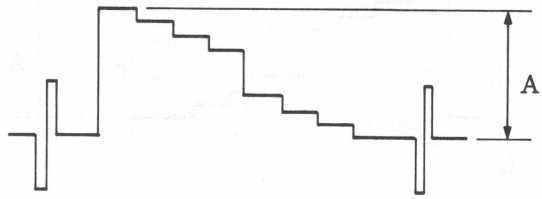 A=700±2mV	⊘RV5/IV-23 (D7) (Y signal input level adjustment)
STEP-2 • Same as STEP-1	TP11/IV-23 (E6) 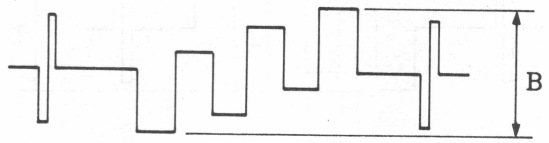 B=700±2mV	⊘RV6/IV-23 (E7) (P_B signal input level adjustment)
STEP-3 • Same as STEP-1	TP13/IV-23 (F6) 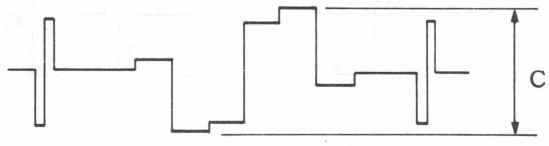 C=700±2mV	⊘RV7/IV-23 (F7) (P_R signal input level adjustment)

15-11. AD VIDEO LEVEL ADJUSTMENT (when inputting Y, P_B, P_R)

Machine conditions for adjustment	Specifications	Adjustments
STEP-1 • VTR: EE • TEST SG: Color bars (Y, P_B, P_R) • OSCILLOSCOPE: 0.2V/DIV 5µs/DIV • TRIG: MENU T03 "REF HD"	TP7/IV-23 (C8) 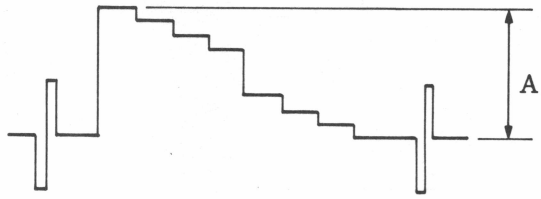 A = 1400 ± 3mV	⊘(RV1/IV-23 (A6) (AD video Y signal level adjustment)
STEP-2 • Same as STEP-1	TP203/IV-23 (A1) 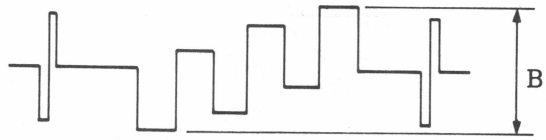 B = 1400 ± 3mV	⊘RV201/IV-23 (A5) (AD video P_B signal level adjustment)
STEP-3 • Same as STEP-1	TP303/IV-23 (D2) 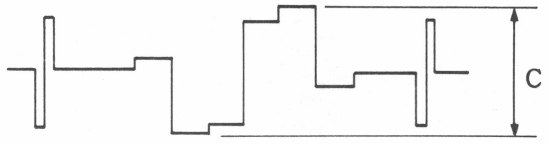 C = 1400 ± 3mV	⊘RV301/IV-23 (D4) (AD video P_R signal level adjustment)

15-12. INPUT MATRIX ADJUSTMENT

Machine conditions for adjustment	Specifications	Adjustments
STEP-1 • VTR: EE • TEST SG: Color bars (GBR) • Set INPUT MATRIX switch of the rear panel to "GBR". • OSCILLOSCOPE: 20mV/DIV 5µs/DIV • TRIG: MENU T03 "REF HD"	TP203/IV-23 (A1) 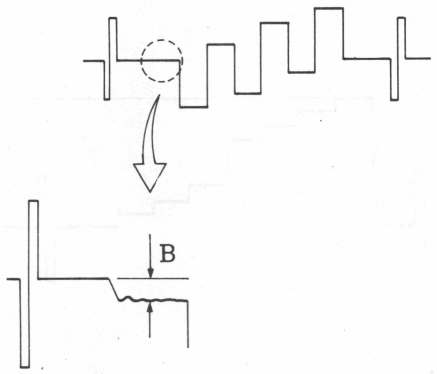 The B section level must be the same with pedestal level. B = 0 ± 2mV	◓RV9/IV-23 (E6)
STEP-2 • Same as STEP-1	TP303/IV-23 (D2) 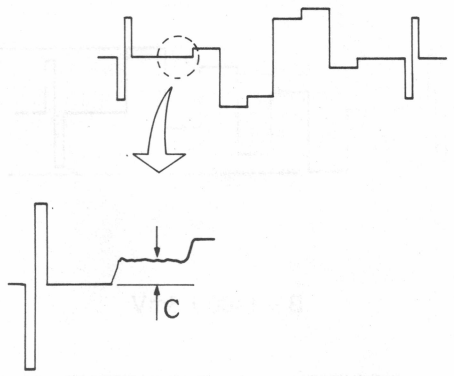 C = 0 ± 2mV	◓RV11/IV-23 (F6)

15-13. AD VIDEO LEVEL ADJUSTMENT (when inputting GBR)

Machine conditions for adjustment	Specifications	Adjustments
STEP-1 • VTR: EE • TEST SG: Color bars (GBR) • Set INPUT MATRIX switch of the rear panel to "GBR". • OSCILLOSCOPE: 0.2V/DIV 5µs/DIV • TRIG: MENU T03 "REF HD"	TP7/IV-23 (C8) 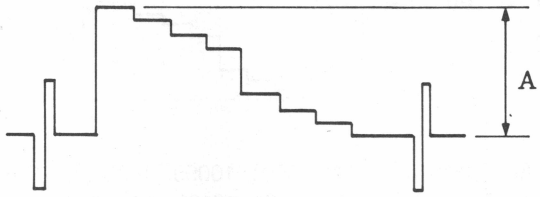 A = 1400 ± 3mV	⊘RV8/IV-23 (D5) (AD video Y signal level adjustment)
STEP-2 • Same as STEP-1	TP203/IV-23 (A1) 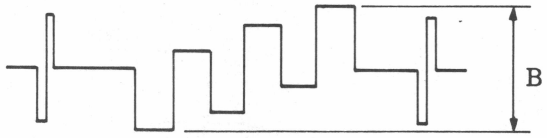 B = 1400 ± 3mV	⊘RV10/IV-23 (E5) (AD video PB signal level adjustment)
STEP-3 • Same as STEP-1	TP303/IV-23 (D2) 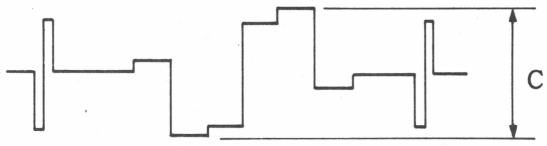 C = 1400 ± 3mV	⊘RV12/IV-23 (F5) (AD video PR signal level adjustment)

15-14. Y WAVEFORM DISTORTION ADJUSTMENT

Machine conditions for adjustment	Specifications	Adjustments
STEP-1 • VTR: EE • TEST SG: Color bars (GBR) • Turn off S1-1 (C6) of IV-23 board, then turn on S1-2. • Turn off S1 (C6) for S/N 10401 and higher (last two digit of board number, –12).	Off side terminal (or IC13 pin-4) of S1-2/IV-23 S/N 10401 and higher, TP23 (C6) 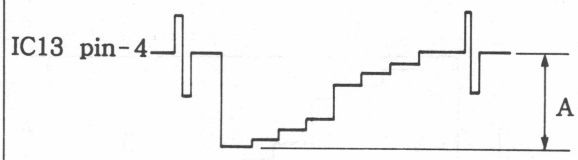 A=150±10 mV (S/N 10001~10099, 10201~10299) A=100±10 mV (S/N 10101~10199, 10301~)	◐RV2/IV-23 (B6) (Y waveform distortion adjustment)
STEP-2 • Set the pedestal level (B of the right figure) of CH-1 signal with scale of Oscilloscope. • OSCILLOSCOPE: 0.1V/DIV 5μs/DIV • TRIG: REF HD	CH-1: IC13 pin-4/IV-23 or TP23 (C6) (S/N 10401 and higher) CH-2: IC13 pin-8/IV-23 or TP24 (C6) (S/N 10401 and higher) 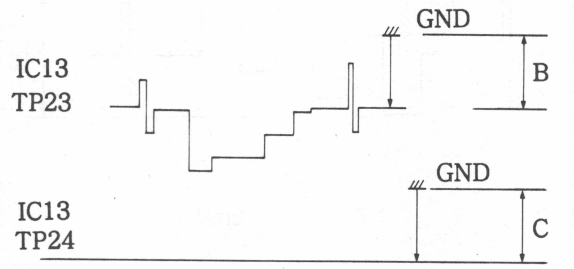 B=C	◐RV4/IV-23 (C6) (Y offset adjustment) Adjust RV4 so that the level of IC13 pin-8 (TP24) (C of the left figure) to be B of the figure to the left.

15-15. PB/PR WAVEFORM DISTORTION ADJUSTMENT

15-15-1. PB/PR Waveform Distortion Adjustment (1)

Machine conditions for adjustment	Specifications	Adjustments
STEP-1 • VTR: EE • TEST SG: Color bars (GBR) • Measure PB video level (A of the right figure) • OSCILLOSCOPE: 0.1V/DIV 5µs/DIV	TP201/IV-23 (A4) 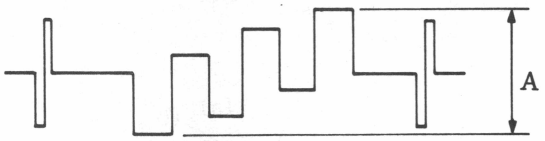	(Measure) (PB-1 video level measurement)
STEP-2 • Adjust PB video level (A' of the right figure) to be same as A. • OSCILLOSCOPE: 0.1V/DIV 5µs/DIV	TP204/IV-23 (C1) 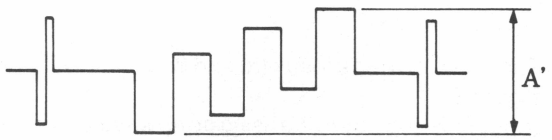 A' = A ± 10mV (A = PB video level at TP201)	⊘RV204/IV-23 (D1) (PB-2 video level adjustment)
STEP-3 • Measure PR video level (B of the right figure). • OSCILLOSCOPE: 0.1V/DIV 5µs/DIV • TRIG: REF HD	TP301/IV-23 (D4) 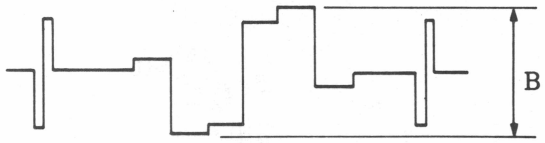	(Measure) (PR-1 video level measurement)
STEP-4 • Adjust PR video level (B' of the right figure) to be same as B. • OSCILLOSCOPE: 0.1V/DIV 5µs/DIV • TRIG: REF HD	TP304/IV-23 (F1) 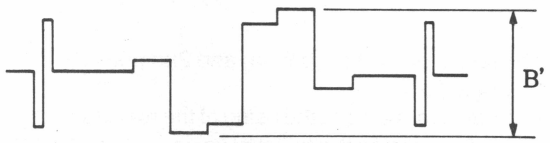 B' = B ± 10mV (B = PR video level at TP301)	⊘RV304/IV-23 (F1) (PR-2 video level adjustment)

15-15-2. PB/PR Waveform Distortion Adjustment-2

Machine conditions for adjustment	Specifications	Adjustments
• VTR: EE • TEST SG: Color bars (GBR) • Turn off S201 (A1) and S301 (E1) of IV-23 board. • Magnify and indicate the part shown in the right figure, and adjust the ringing level with ◐RV203.	TP203/IV-23 (A1) 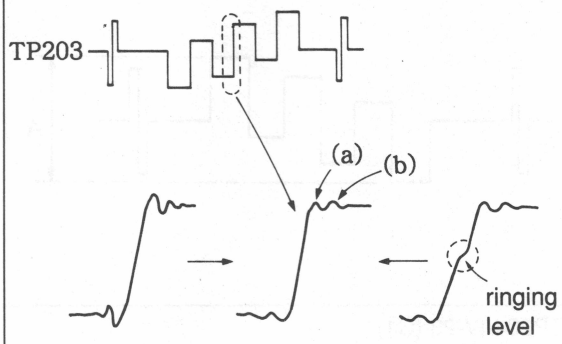 Figure 1 Figure 2 Figure 3	◐RV203/IV-23 (A1) (PB waveform distortion adjustment)
• OSCILLOSCOPE: 0.2V/DIV 5µs/DIV →magnification 50nS/DIV • TRIG: REF HD	The levels of the 1st peak (a) and 2nd peak (b) in the Figure 2. If the steps appears in the rising of the waveform in the Figure3, minimize the (a) level so as not to appear the steps.	
• Magnify and indicate the part shown in the right figure, and adjust the ringing level with ◐RV303.	TP303/IV-23 (D2) 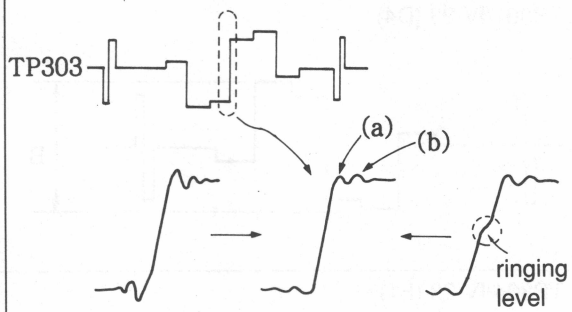 Figure 1 Figure 2 Figure 3 The levels of the 1st peak (a) and 2nd peak (b) in the Figure 2. If the steps appears in the rising of the waveform in the Figure3, minimize the (a) level so as not to appear the steps.	◐RV303/IV-23 (D1) (PB waveform distortion adjustment)

15-16. DLC LEVEL CONFIRMATION

Machine conditions for adjustment	Specifications	Adjustments
STEP-1 • VTR: EE • TEST SG: Built-in SG (Color bars) • MENU T20 (VIDEO TEST SG): CG • OSCILLOSCOPE: A measure 200mV/DIV B measure 50mV/DIV 10µs/DIV • TRIG : MENU T20 "SEG HD"	TP402/IPR-1 (C3) 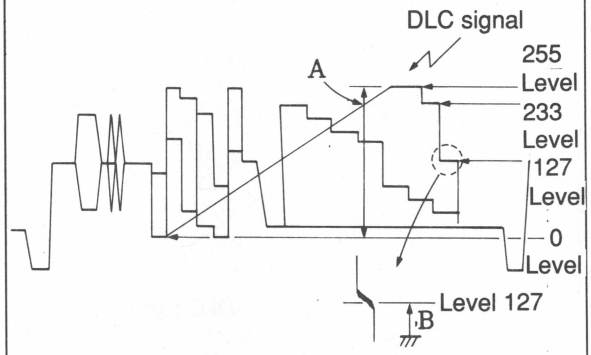 Confirm the level 127 (B) of DLC signal, and level 0~225 (A) are among the specification as below. A = 1.00 ± 0.03V B = –200mVdc ~ +100mVdc	(Confirmation) If the specification is not satisfied, adjust DLC level.
STEP-2 • Same as STEP-1	TP502/IPR-1 (C8) 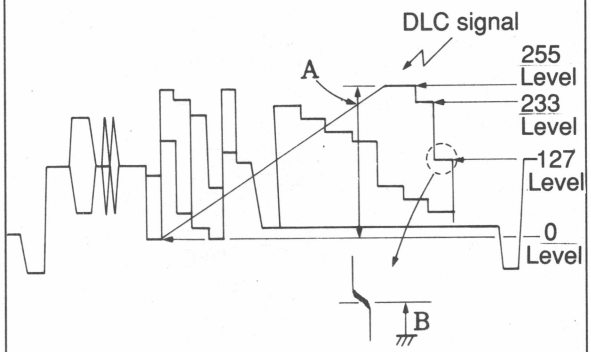 Confirm the level 127 (B) of DLC signal, and level 0~255 (A) are among the specification as below. A = 1.00 ± 0.03V B = –200mVdc ~ +100mVdc	(Confirmation) If the specification is not satisfied, adjust DLC level.
STEP-3 • MENU T20 (VIDEO TEST SG): OFF		

15-17. DLC LEVEL ADJUSTMENT

Note : Operate only in case the DLC LEVEL confirmation does not satisfy the specification.

Machine conditions for adjustment	Specifications	Adjustments
STEP-1 • VTR: EE • TEST SG: Built-in SG (Color bars) • MENU T20 (VIDEO TEST SG): CB • OSCILLOSCOPE: 200mV/DIV 10µs/DIV • TRIG: MENU T03 "SEG H"	TP401/IPR-1 (F2) 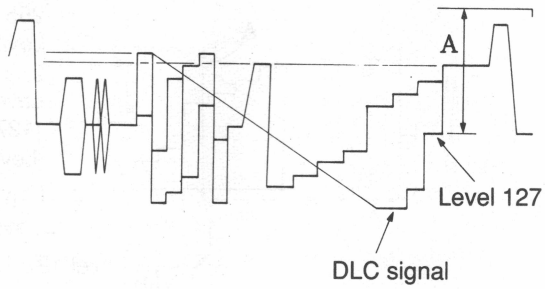 Level 127 of the DLC SIGNAL: A = –800 ± 10mV	⊘RV401/IPR-1 (E3) (DA-Ach DLC level adjustment)
STEP-2 • Same as STEP-1	TP501/IPR-1 (E9) 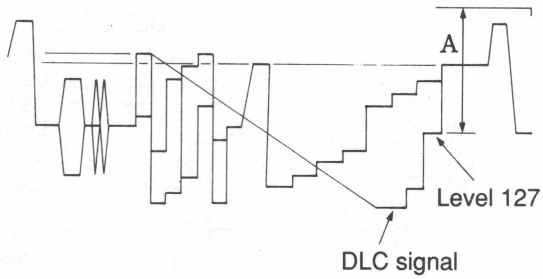 Level 127 of the DLC SIGNAL: A = –800 ± 10mV	⊘RV501/IPR-1 (D6) (DA-Bch DLC level adjustment)

Machine conditions for adjustment	Specifications	Adjustments
STEP-3 • Same as STEP-1	TP402/IPR-1 (C3) 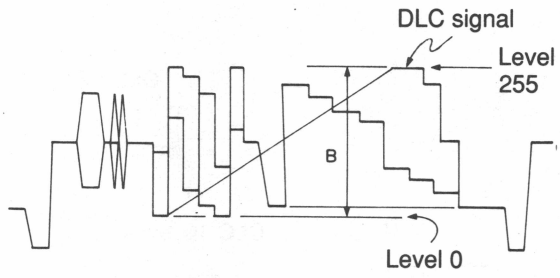 Level 0~255 of the DLC signal: B = 1.00 ± 0.03V	◐RV402/IPR-1 (D2) (MD-Ach DLC level adjustment)
STEP-4 • Same as STEP-1	TP502/IPR-1 (C8) 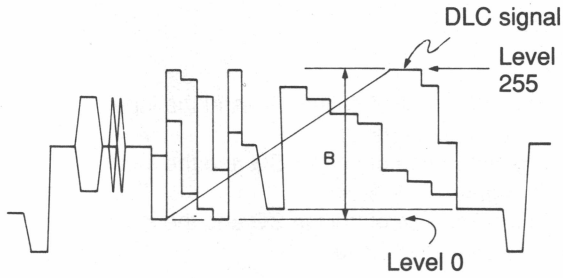 Level 0~255 of the DLC signal: B = 1.00 ± 0.03V	◐RV502/IPR-1 (D8) (MD-Bch DLC level adjustment)
STEP-5 • MENU T20 (VIDEO TEST SG): OFF		

15-18. AD VIDEO OFFSET ADJUSTMENT

Machine conditions for adjustment	Specifications	Adjustments
• VTR: EE • TEST SG: Color bars (Y, P_B, P_R) ↔ Built-in SG (Color bars) simultaneous input • Set the INPUT MATRIX switch of the rear panel to Y, P_B, P_R. • Menu T06 (VIDEO EE LEVEL CHECK): ON	TP502/IPR-1 (C8) 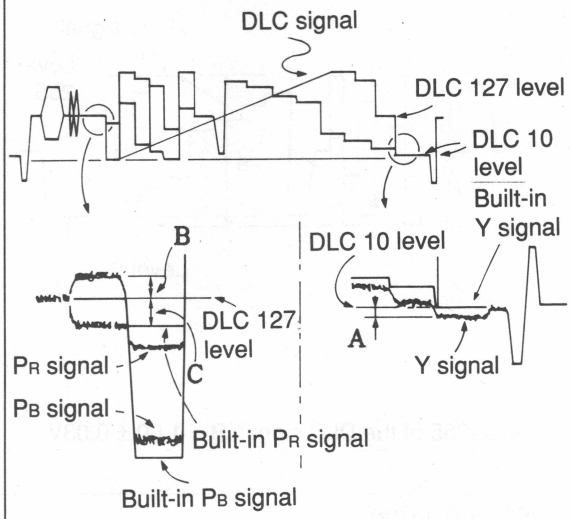 	(Y, P_B, P_R, AD video offset adjustment)
• OSCILLOSCOPE: 50, 20mV/DIV 10µs/DIV • TRIG: SEG HD	The difference of built-in SG and the input Y signal at 0% level A = 0 ± 4mV The difference of built-in SG and the input P_B signal at 0% level C = 0 ± 4mV The difference of built-in SG and the input P_R signal at 0% level B = 0 ± 4mV	⊘RV103/IPR-1 (V22) ⊘RV202/IPR-1 (R23) ⊘RV302/IPR-1 (M21)

15-19. AD VIDEO Y LEVEL ADJUSTMENT

Machine conditions for adjustment	Specifications	Adjustments
• VTR: EE • TEST SG: Color bars (Y, P_B, P_R) ↔ Built-in SG (Color bars) simultaneous input • MENU T06 (VIDEO EE LEVEL CHECK): ON • OSCILLOSCOPE: 50mV/DIV 10μS/DIV • TRIG: SEG HD	TP502/IPR-1 (C8) 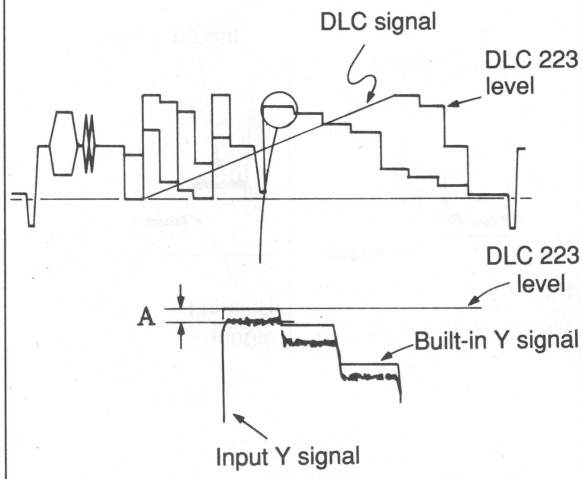 The difference of built-in SG and the input Y signal at 100% level: A=0±4mV	◐RV101/IPR-1 (W24) (Y AD video input level adjustment)

15-20. AD VIDEO P_B/P_R LEVEL ADJUSTMENT

Machine conditions for adjustment	Specifications	Adjustments
• VTR: EE • TEST SG: Color Bars (Y, P_B, P_R) ↔ Built-in SG (Color bars) simultaneous input • MENU T06: ON	TP502/IPR-1 (C8) 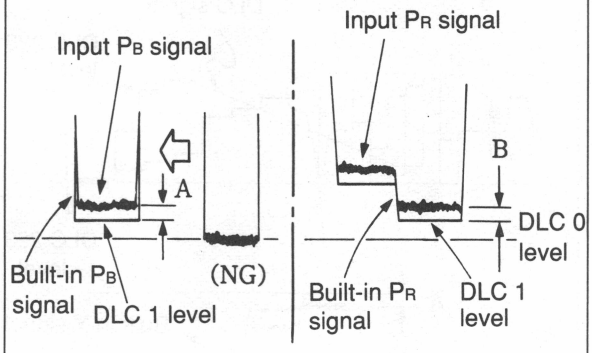	(P_B, P_R, AD video input level adjustment)
• OSCILLOSCOPE: 50mV/DIV 10μS/DIV • TRIG: SEG HD	The difference of built-in SG and the input P_B signal at –50% level: A=0±4mV →	◓RV201/IPR-1 (R24)
	The difference of built-in SG and the input P_R signal at –50% level: B=0±4mV →	◓RV301/IPR-1 (N24)

15-21. DA VIDEO LEVEL ADJUSTMENT

Machine conditions for adjustment	Specifications	Adjustments
STEP-1 • VTR: EE • TEST SG: Built-in SG (Color bars) • OSCILLOSCOPE: 100mV/DIV 10μS/DIV • TRIG: MENU T03 "SEG H"	TP101/MD-65 (D11) 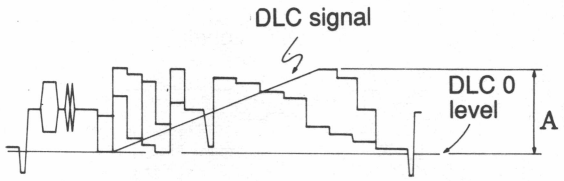 A=500±10mV	◐RV101/MD-65 (D13) (A-CH DA video level adjustment)
STEP-2 • Same as STEP-1	TP201/MD-65 (L11) 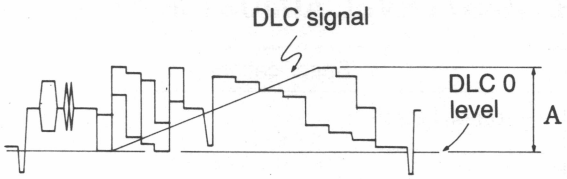 A=500±10mV	◐RV201/MD-65 (L13) (B-CH DA video level adjustment)

15-22. A-CH NON-LINEAR VIDEO LEVEL ADJUSTMENT

Machine conditions for adjustment	Specifications	Adjustments
• VTR: EE • TEST SG: Built-in SG (Color bars) • OSCILLOSCOPE: 200mV/DIV 10μS/DIV • TRIG: MENU T03 "SEG H"	TP103/MD-65 (K6) 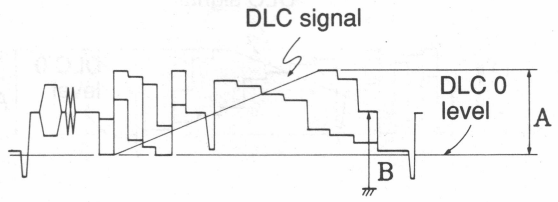 A=1.00±0.01mV B=0±50mVdc (Confirmation)	◐RV102/MD-65 (J9) (A-CH non-linear video level adjustment)

15-23. B-CH NON-LINEAR VIDEO LEVEL ADJUSTMENT

Machine conditions for adjustment	Specifications	Adjustments
• VTR: EE • TEST SG: Built-in SG (Color bars) • OSCILLOSCOPE: 50mV/DIV 10μS/DIV • TRIG: MENU T03 "SEG H"	TP203/MD-65 (P6) 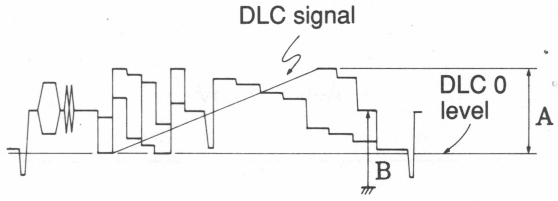 A=1.00±0.01mV B=0±50mVdc (Confirmation)	◐RV202/MD-65 (N9) (B-CH non-linear video level adjustment)

15-24. NON-LINEAR EMPHASIS ADJUSTMENT

NOTE: After performing A-CH and B-CH NON-LINEAR-1 MIX Adjustment of DM-77 board, perform the following adjustment.

Machine conditions for adjustment	Specifications	Adjustments
• VTR: EE • TEST SG: Color bars (Y, P_B, P_R) • OSCILLOSCOPE: 100mV/DIV 1μS/DIV • TRIG: MENU REF H	P_B output terminal 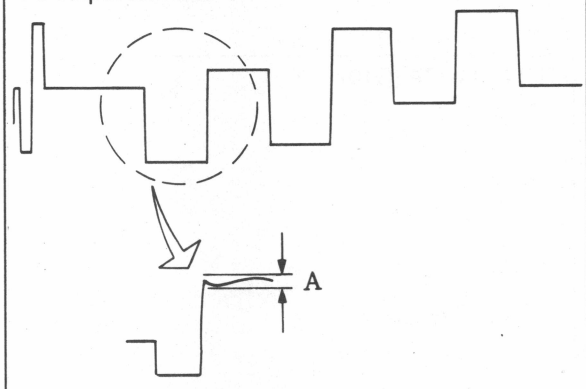 A≦20mV (Adjust so that A becomes flat as possible.)	◐RV105/MD-65 (J7) ◐RV205/MD-65 (R7) Confirm: Make sure that the difference of waveform by ON/OFF of MENU I86 NON-LINEAR is less than 10 mV.

15-25. A-CH DEM EE ADJUSTMENT

Machine conditions for adjustment	Specifications	Adjustments
STEP-1 • Turn off VTR, and pull out DM-77A board (slot #2) with the extension board EX-212. • Turn on VTR.		
STEP-2 • VTR: EE • TEST SG: Color bars (Y, P_B, P_R) • OSCILLOSCOPE: 0.2V/DIV, 2mV/DIV, DLY 20μS/DIV • TRIG: MENU T03 (WFM TRIG SEL) "REF FRM"	TP14/DM-77A (G10) DLC0~255 level: D=1.40±0.04V	⊘RV103/DM-77A (G7)

15-26. B-CH DEM EE Adjustment

Machine conditions for adjustment	Specifications	Adjustments
STEP-1 • Turn off VTR, and pull out DM-77B board (slot #1) with the extension board EX-212. • Turn on VTR.		
STEP-2 • VTR: EE • TEST SG: Color bars (Y, P_B, P_R) • OSCILLOSCOPE: 0.2V/DIV 20μS/DIV DLY 20μS/DIV • TRIG: MENU T03 (WFM TRIG SEL) "REF FRM"	TP14/DM-77B (G10) DLC0 ~ 255 level: D=1.40±0.04V	◐RV103/DM-77B (G7)

15-27. WFM OUTPUT OFFSET ADJUSTMENT

Machine conditions for adjustment	Specifications	Adjustments
STEP-1 • Turn off VTR, and pull out TBC-15 board with the extension board EX-211. • Turn on VTR.		
STEP-2 • VTR: EE • TEST SG: Color bars (Y, P_B, P_R) • MENU T02 (WFM TEST SEL): TBC-15, V YODD • OSCILLOSCOPE: 0.1V/DIV 5µs/DIV • TRIG: MENU T03 (WFM TRIG SEL) "AUTO" NOTE: Leave TBC-15 board pulled out by the extension board for later adjustment.	TP18/TBC-15 (P20) 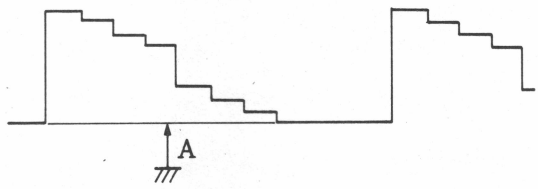 A=0±10mVdc	⊘RV8/TBC-15 (R18)

15-28. SYNC AGC ADJUSTMENT

Machine conditions for adjustment	Specifications	Adjustments
STEP-1 • Turn off VTR. (TBC-15 board is kept out). • Remove four screws fixing the panel, pull down the rear panel in the back. NOTE: Do not pull the panel too strong because the rear panel is connected with the VTR body by cables. • Turn on VTR. NOTE: When power is turned on, the fan motor attached on the rear panel rotates. Take care not to be wrapped into. • Select the "REF HD" of MENU T03 (WFM TRIG SEL) and the "CB" of T20 (VIDEO TEST SG).		
STEP-2 • VTR: EE • TEST SG: Built-in SG (Color bars) MENU T20 (VIDEO TEST SG): CB • OSCILLOSCOPE: 0.1V/DIV 5µs/DIV • TRIG: MENU T03 (WFM TRIG SEL) "REF HD"	TP1/SMB-8 (D3) 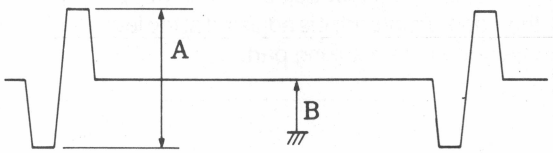 B=0±5mVdc A=600±4mVp-p	B in the left figure ⊘RV2/SMB-8 (D3) (Sync offset adjustment) A in the left figure ⊘RV3/SMB-8 (D3) (Sync level adjustment)

15-29. DA Y LEVEL/OFFSET ADJUSTMENT

Machine conditions for adjustment	Specifications	Adjustments
• VTR: EE • TEST SG: Built-in SG (Color bars) • OSCILLOSCOPE: 0.1V/DIV 5µs/DIV • TRIG: MENU T03 "REF HD"	TP101/SMB-8 (D1) 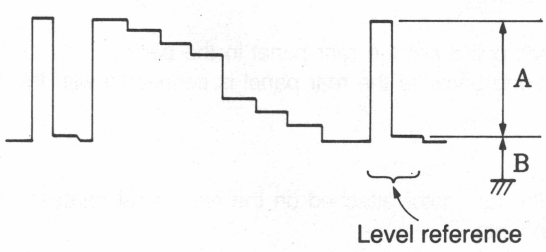 B=0±5mVdc A=400±2mV NOTE: The level and offset adjustment is not performed at the video signal part, it is adjusted at the level reference inserted in the blanking part.	B in the left figure ⊘RV1/TBC-15 (M14) (Y offset level adjustment) ⊘RV2/TBC-15 (M15) (Y video level adjustment)

15-30. DA PB LEVEL/OFFSET ADJUSTMENT

Machine conditions for adjustment	Specifications	Adjustments
• VTR: EE • TEST SG: Built-in SG (Color bars) • OSCILLOSCOPE: 50mV/DIV 5μs/DIV • TRIG: MENU T03 "REF HD"	TP201/SMB-8 (D2) 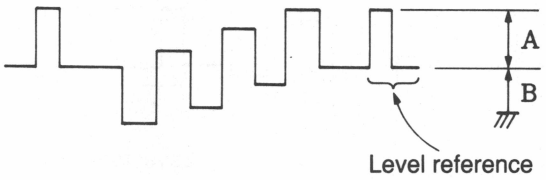 B=0±5mVdc A=200±1mV NOTE: The level and offset adjustment is not performed at the video signal part, it is adjusted at the level reference inserted in the blanking part.	B in the left figure ⊘RV3/TBC-15 (M17) (PB offset level adjustment) A in the left figure ⊘RV4/TBC-15 (M19) (PB video level adjustment)

15-31. DA PR LEVEL/OFFSET ADJUSTMENT

Machine conditions for adjustment	Specifications	Adjustments
• VTR: EE • TEST SG: Built-in SG (Color bars) • OSCILLOSCOPE: 50mV/DIV 5µs/DIV • TRIG: MENU T03 "REF HD"	TP301/SMB-8 (D3) 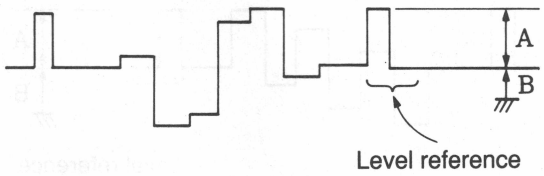 B=0±5mVdc A=200±1mV NOTE: The level and offset adjustment is not performed at the video signal part, it is adjusted at the level reference inserted in the blanking part.	B in the left figure ⊘RV5/TBC-15 (M20) (PR offset level adjustment) A in the left figure ⊘RV6/TBC-15 (M21) (PR video level adjustment)

15-32. SMB OUTPUT OFFSET ADJUSTMENT

Machine conditions for adjustment	Specifications	Adjustments
STEP-1 • VTR: EE • TEST SG: Built-in SG (Color bars) • OSCILLOSCOPE: 20mV/DIV 5µs/DIV • TRIG: MENU TO3 "REF HD"	TP104/SMB-8 (C1) 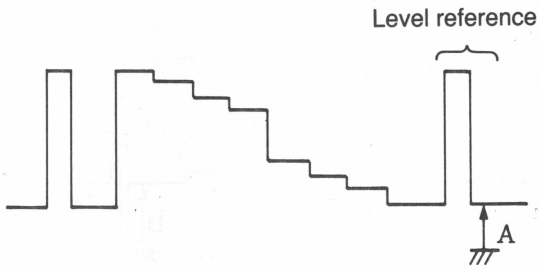 A=0±5mVdc	⊘RV104/SMB-8 (B1) (Y output offset adjustment)
STEP-2	TP204/SMB-8 (C2) 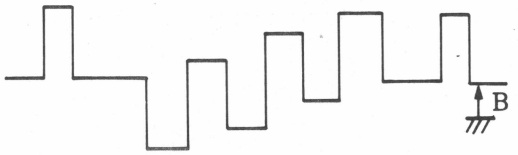 B=0±5mVdc	⊘RV204/SMB-8 (B2) (PB output offset adjustment)
STEP-3	TP304/SMB-8 (C3) 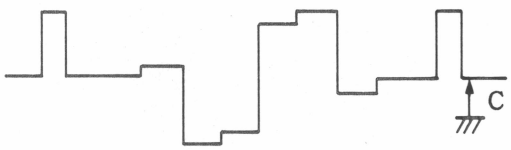 C=0±5mVdc	⊘RV304/SMB-8 (B3) (PR output offset adjustment)

15-33. SMB OUTPUT LEVEL Y/G ADJUSTMENT

Machine conditions for adjustment	Specifications	Adjustments
• VTR: EE • TEST SG: Built-in SG (Color bars) • OUTPUT MATLIX SW (REAR PANEL): Y, P_B, P_R	TP103/SMB-8 (C1) 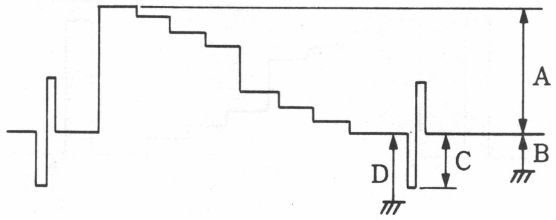	D in the left figure ⊘RV101/SMB-8 (C1) (Sync offset level adjustment) A in the left figure ⊘RV105/SMB-8 (B1) (Video level adjustment) C in the left figure ⊘RV102/SMB-8 (C1) (Sync level adjustment)
• OSCILLOSCOPE: A: 0.2V/DIV B: 20mV/DIV, C: 0.1V/DIV D: 20mV/DIV, 5μS/DIV • TRIG: MENU T03 "REF HD"	Sync offset level: D=B±2mVdc Video level: A=700±2mV Sync level: C=300±2mV	

15-34. OUTPUT MATRIX ADJUSTMENT

Machine conditions for adjustment	Specifications	Adjustments
• VTR: EE • TEST SG: Built-in SG (Color bars) • OSCILLOSCOPE: 0.2V/DIV 5µs/DIV • TRIG: MENU T03 "REF HD"	TP103/SMB-8 (C1) 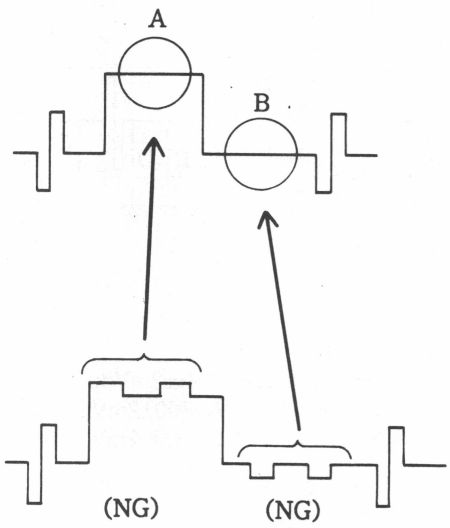 The waveform in A and B should be flat. (The slope in A and B should be the same.)	⊘RV1/SMB-8 (D1)

15-35. SMB OUTPUT LEVEL PB/B ADJUSTMENT

Machine conditions for adjustment	Specifications	Adjustments
• VTR: EE • TEST SG: Built-in SG (Color bars) • OUTPUT MATLIX SW (REAR PANEL): Y, PB, PR • OSCILLOSCOPE: A: 0.2V/DIV B: 20mV/DIV, C: 0.1V/DIV D: 20mV/DIV, 5μS/DIV • TRIG: MENU T03 "REF HD"	TP203/SMB-8 (B2) 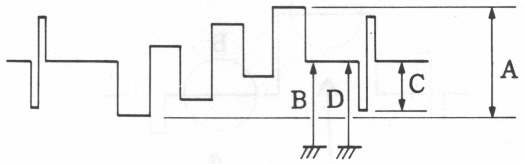 Sync offset level: D=B±2mVdc Video level: A=700±2mVp-p Sync level: C=300±2mV	D in the left figure ◓RV201/SMB-8 (C2) (Sync offset level adjustment) A in the left figure ◓RV205/SMB-8 (B2) (Video level adjustment) C in the left figure ◓RV202/SMB-8 (C2) (Sync level adjustment)

15-36. SMB OUTPUT LEVEL PR/R ADJUSTMENT

Machine conditions for adjustment	Specifications	Adjustments
STEP-1 • VTR: EE • TEST SG: Built-in SG (Color bars) • OUTPUT MATLIX SW (REAR PANEL): Y, PB, PR • OSCILLOSCOPE: A: 0.2V/DIV, B: 20mV/DIV, C: 0.1V/DIV, D: 20mV/DIV, 5μS/DIV • TRIG: MENU T03 "REF HD"	TP303/SMB-8 (D3) 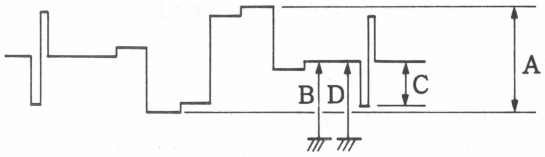 Sync offset level: D=B±2mV Video level: A=700±2mVp-p Sync level: C=300±2mV	D in the left figure ◐RV301/SMB-8 (C3) (Sync offset level adjustment) A in the left figure ◐RV305/SMB-8 (B2) (Video level adjustment) C in the left figure ◐RV302/SMB-8 (C3) (Sync level adjustment)
STEP-2 • Turn off VTR. • Return TBC-15 board back. • Re-install the rear panel to its original place. NOTE: If the power supply harness of the rear panel fan motor is removed during SMB-8 board adjustment/confirmation process , it should be connected before installation of rear panel.		

15-37. VIDEO OUTPUT ADJUSTMEMT

<table>
<tr><th>Machine conditions for adjustment</th><th>Specifications</th><th>Adjustments</th></tr>
<tr><td colspan="3">STEP-1

• Turn off VTR.

• Pull out IO-44 board (VIDEO OUTPUT) with the IO board extension tool EX-284 (J-6268-100-A).

• Turn on VTR.

• Set OUTPUT MATLIX SW in the rear panel to Y, PB, PR.

• Select Color bars at Menu T20 (VIDEO TEST SG).</td></tr>
<tr><td>STEP-2

• VTR: EE

• TEST SG: Built-in SG
(Color bars)

• Terminate VIDEO OUTPUT Y/G output connector (IO-44) to 75Ω, and input to Oscilloscope.

• OSCILLOSCOPE: 0.2V/ DIV
5μS/DIV

• TRIG: MENU T03 (WFM TRIG SEL) “REF HD”</td><td>VIDEO OUTPUT Y/G (75 Ω terminated)
(Either IO-44 board or rear panel)

 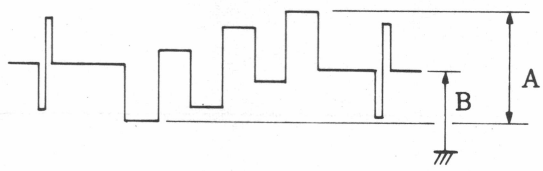

A=700±3mVp-p

B=0±50mVdc</td><td>A in the left figure
●RV1/IO-44 (B2)
(Video output Y/G level adjustment)

B in the left figure: confirmation
(Offset level)</td></tr>
<tr><td>STEP-3

• Adjust while pressing the input switch of control panel.</td><td>A=700±3mVp-p

B=0±50mVdc</td><td>A in the left figure
●RV2/IO-44 (B2)
(By-pass video Y/G adjustment)

B in the left figure: confirmation
(Offset level)</td></tr>
</table>

15-38. VIDEO OUTPUT PB/B ADJUSTMEMT

Machine conditions for adjustment	Specifications	Adjustments
STEP-1 • VTR: EE • TEST SG: Build-in SG (Color bars) • Terminate VIDEO OUTPUT PB/B output connector to 75Ω, and input to OSCILLOSCOPE. • OSCILLOSCOPE: 0.2V/ DIV 5μS/DIV • TRIG: MENU T03 "REF HD"	VIDEO OUTPUT PB/B output connector (Either IO-44 board or Rear Panel) 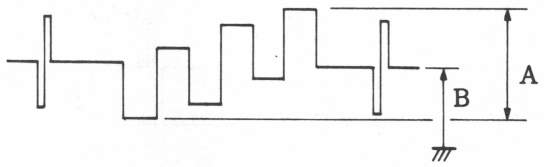 A=700±3mVp-p B=0±50mVdc	A in the left figure ◐RV3/IO-44 (C2) (Video output PB/B level adjustment) B in the left figure: confirmation
STEP-2 • Adjust while pressing the input switch of control panel.	A=700±3mVp-p B=0±50mVdc	A in the left figure ◐RV4/IO-44 (D2) (By-pass video PB/B adjustment) B in the left figure: confirmation

15-39. VIDEO OUTPUT PR/R ADJUSTMEMT

Machine conditions for adjustment	Specifications	Adjustments
STEP-1 • VTR: EE • TEST SG: Built-in SG (Color bars) • Terminate VIDEO OUTPUT PR/ R output connector to 75Ω, and input to OSCILLOSCOPE. • OSCILLOSCOPE: 0.2V/ DIV 5μS/DIV • TRIG: REF HD	VIDEO OUTPUT PR/R output connector (IO-44 board or Rear Panel) 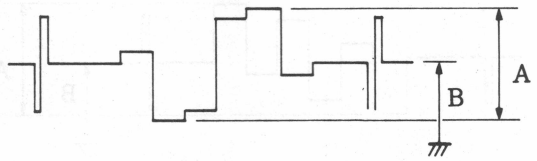 A=700±3mVp-p B=0±50mVdc	A in the left figure ◐RV5/IO-44 (F2) (Video output PR/R level adjustment) B in the left figure: confirmation
STEP-2 • Adjust while pressing the input switch of control panel.	A=700±3mVp-p B=0±50mVdc	A in the left figure ◐RV6/IO-44 (F1) (By-pass video PR/R adjustment) B in the left figure: confirmation

15-40. SYNC OUTPUT ADJUSTMEMT

Machine conditions for adjustment	Specifications	Adjustments
STEP-1 • VTR: EE • TEST SG: Built-in SG (Color bars) • Terminate VIDEO OUTPUT SYNC OUTPUT connector to 75Ω, and input to OSCILLOSCOPE. • OSCILLOSCOPE: 0.1V/DIV 5μS/DIV • TRIG : MENU T03 "REF HD"	VIDEO OUTPUT SYNC OUTPUT connector (Either IO-44 or Rear Panel) 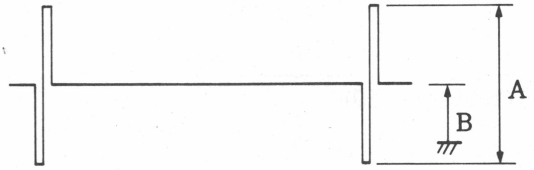 A=600±3mVp-p B=0±50mVdc	A in the left figure ⊘RV7/IO-44 (H1) (SYNC output level adjustment) B in the left figure: confirmation
STEP-2 • Turn off VTR. • Put IO-44 board back.		

15-41. Y/C DELAY PLL ADJUSTMENT

Machine conditions for adjustment	Specifications	Adjustments
STEP-1 • Turn off VTR. • Pull out SG-169 board with the extension board EX-211. • Turn on VTR.		
STEP-2 • VTR: EE • TEST SG: Color bars • OSCILLOSCOPE: 1V/DIV 2μS/DIV • TRIG: CH-1	TP5/SG-169 (E9) A = 5.0± 0.5Vdc	⊘LV2/SG-169 (G7) (Y/C delay PLL adjustment)

15-42. WFM OUTPUT LEVEL ADJUSTMEMT

<table>
<tr><th>Machine conditions for adjustment</th><th>Specifications</th><th>Adjustments</th></tr>
<tr><td colspan="3">STEP-1

• Turn off VTR.

• Pull out IO-53 board with the extension board EX-281.

• Turn on VTR.</td></tr>
<tr><td>STEP-2

• VTR: EE

• TEST SG: Color bars
(Y, PB, PR)

• MENU T0 2 (WFM TEST SEL):
IO-53, Y/G

• Adjust WFM output while pressing INPUT button of control panel.

• OSCILLOSCOPE: 0.2V/DIV
5μS/DIV

• TRIG: MENU T03 “REF HD”</td><td>WFM connector
(IO-53/Rear Panel)

 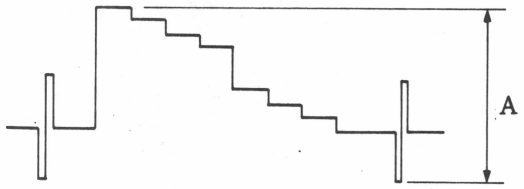

A=1.00±0.02mVp-p</td><td>⊘RV1/IO-53 (E1)
(WFM output level adjustment)</td></tr>
<tr><td colspan="3">STEP-3

• Turn off VTR.

• Put IO-53 board back.</td></tr>
</table>

15-43. WFM OUTPUT OFFSET ADJUSTMEMT

Machine conditions for adjustment	Specifications	Adjustments
STEP-1 • VTR: EE • TEST SG:· Color bars (Y, P_B, P_R) • MENU T02 (WFM TEST SEL): IO-53, Y/G • OSCILLOSCOPE: 50mV/DIV 5µS/DIV • TRIG: MENU T03 "REF HD"	WFM connector (Do not terminate 75 Ω.) (IO-53 Rear Panel) 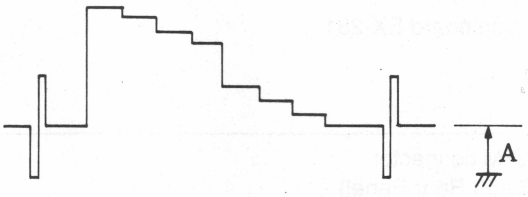 A=0±20 mVdc	⊘RV11/SG-169 (E13) (WFM output offset adjustment)
STEP-2 • Turn off VTR. • Put SG-169 board back.		

15-44. SAMPLING PHASE ADJUSTMEMT

Machine conditions for adjustment	Specifications	Adjustments
STEP-1 • Turn off VTR, and pull out TBC-14 board with the extension board EX-211. • Turn on VTR.		
STEP-2 • VTR: EE • TEST SG: Color bars (Y, P_B, P_R)	CH-1: WFM out/TBC-14 AD'ED A CH-2: TP101/TBC-14 (B2) 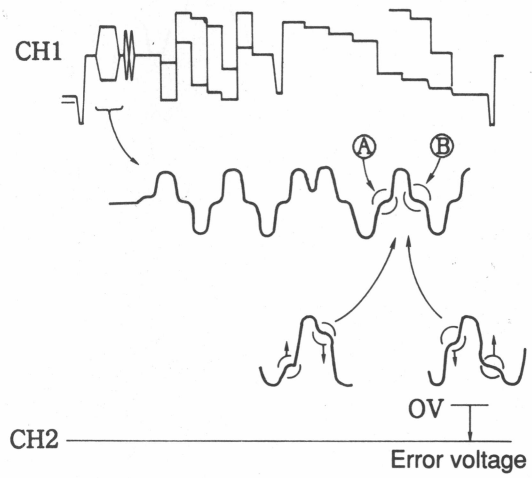 While checking the burst section of DA output (CH-1) and the voltage of TP101 (CH-2), both sampling phase and error voltage must satisfy the specification.	⊘T101/TBC-14 (E2) ⊘T102/TBC-14 (D3)
• OSCILLOSCOPE: CH-1, 0.1V/DIV CH-2, 0.1V/DIV 5μS/DIV • TRIG: MENU T03 (WFM TRIG SEL) "SEG HD"	Sample phase: At the burst expansion points in the figure, the level of A and B must be equal. Error voltage: TP101= –3±1Vdc	If error voltage does not satisfy the specification, adjust the following points. ⊘LV101/TBC-14 (C2) ⊘LV201/TBC-14 (H2)

Machine conditions for adjustment	Specifications	Adjustments
	CH-1: WFM out/TBC-14 AD'ED B CH-2: TP201/TBC-14 (H2) 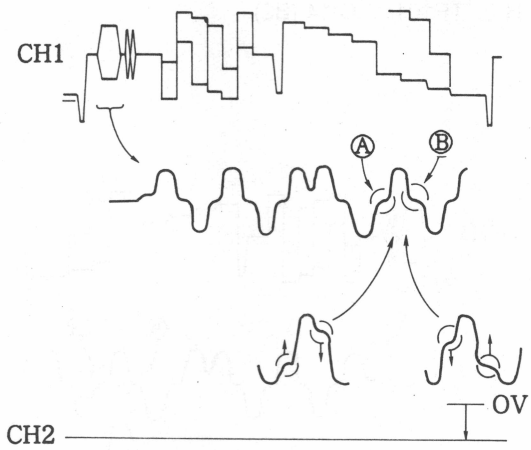 Checking the burst section of DA output (CH-1) and the voltage of TP201 (CH-2), both sampling phase and error voltage must satisfy the specification. Sample phase: At the burst expansion points in the figure, the level of A and B must be equal. Error voltage: TP201= –3±1Vdc	●T201/TBC-14 (K2) ●T202/TBC-14 (J3) If error voltage does not satisfy the specifications, adjust the following points. ●LV201/TBC-14 (H2) ●LV202/TBC-14 (J2)

15-45. VELOCITY ERROR LEVEL ADJUSTMEMT

<table>
<tr><th>Machine conditions for adjustment</th><th>Specifications</th><th>Adjustments</th></tr>
<tr><td>STEP-1

• VTR: EE

• TEST SG: Color bars (Y, PB, PR)</td><td>TP107/TBC-14 (C7)

Velocity error signal center score: A=0±5mVdc</td><td>◐RV102/TBC-14 (D6)
(A-CH velocity error level adjustment)</td></tr>
<tr><td rowspan="2">• OSCILLOSCOPE: 50mV/DIV
2mS/DIV

• TRIG: MENU T03 (WFM TRIG SEL) “REF FRM”</td><td>TP207/TBC-14 (H7)

Velocity error signal center score: A=0±5mVdc</td><td>◐RV202/TBC-14 (J6)
(B-CH velocity error level adjustment)</td></tr>
<tr><td colspan="2">STEP-2

• Turn off VTR, and put TBC-14 board back.</td></tr>
</table>

15-46. VELOCITY ERROR OFFSET ADJUSTMENT

<table>
<tr><th>Machine conditions for adjustment</th><th>Specifications</th><th>Adjustments</th></tr>
<tr><td colspan="3">STEP-1
• Pull out TBC-15 board with the extension board EX-211.
• Turn on VTR.</td></tr>
<tr><td>STEP-2
• VTR: EE
• TEST SG: Color bars
(Y, PB, PR)
• OSCILLOSCOPE: 0.1V/DIV
2mS/DIV
• TRIG: MENU T03(WFM TRIG SEL) “REF FRM”</td><td>CN142 pin-10A/TBC-15
 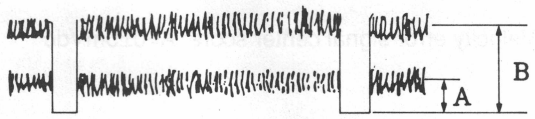

A=0±10mV
B=0±10mV</td><td>A in the left figure
◓RV9/TBC-15 (J1)
(A-CH velocity error offset adjustment)

B in the left figure
◓RV10/TBC-15 (H1)
(B-CH velocity error offset adjustment)</td></tr>
<tr><td>STEP-3
• Same as STEP-2</td><td>CN142 pin-10A/TBC-15
 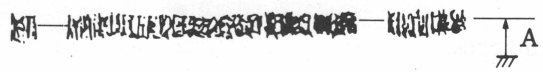

A=0±20mVdc</td><td>◓RV7/TBC-15 (M14)
(Velocity error offset adjustment)</td></tr>
<tr><td colspan="3">STEP-4
• Turn off VTR.
• Put TBC-15 board back.</td></tr>
</table>

15-47. VELOCITY ERROR CORRECTION ADJUSTMENT

15-47-1. Velocity Error Correction Adjustment Preparation

<Connections>

① When there is PAL vector scope

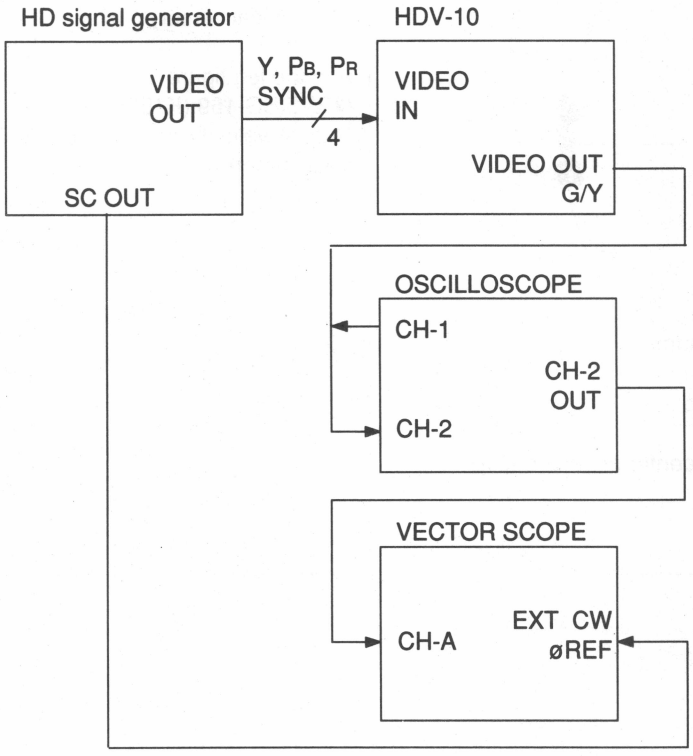

1. Connect as above-mentioned.
2. Set vector scope, 521A/Sony Tectronix (PAL vector scope) as following modes:
   - CHA A ø
   - ø REF = EXT
   - FULL FIELD
3. Turn off VTR and pull out SG -169 board with the extension board EX-211.
4. Turn on VTR.

② When there is no PAL vector scope

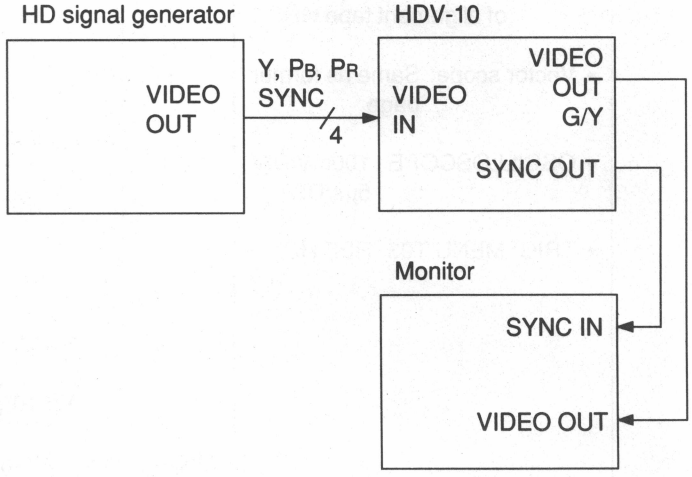

1. Connect as above-mentioned.
2. Turn off VTR and pull out SG -169 board with the extension board EX-211.
3. Turn on VTR.

15-47-2. Velocity Error Correction Adjustment

① When there is PAL vector scope

Machine conditions for adjustment	Specifications	Adjustments
STEP-1 • VTR: Playback the SC portion of alignment tape GR5-1. • Vector scope: Same as former page • OSCILLOSCOPE : 100mV/DIV 5μs/DIV • TRIG: MENU T03 "REF HD"	CH-2 : VIDEO OUT Y/G connector (Rear Panel) 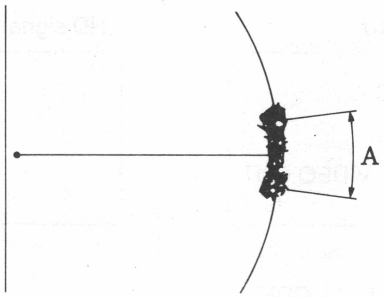 A = Minimum A≦10°p-p Measure between the center of vector scope line. Ignore the noise.	A in the left figure ⊘RV3/SG-169 (K1) (RV5/SG-169 (K15) → mechanical center) A in the left figure ⊘RV5/SG-169 (K15) (Adjust velocity error correction adjustment)
STEP-2 • Turn off VTR. • Put SG-169 board back. • Put the connection back.		

② When there is no PAL vector scope

Machine conditions for adjustment	Specifications	Adjustments
STEP-1 • VTR: PB • Playback the Monoscope portion of alignment tape GR5-1.	CH-2: VIDEO OUT Y/G connector (Rear Panel) 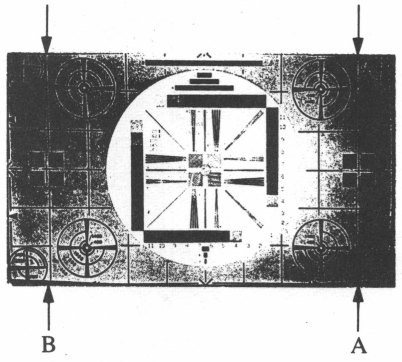 (Monitor Picture) Adjust so that arrow parts become straight.	⊘RV3/SG-169 (K1) (RV5/SG-169 (K15) → mechanical center) ⊘RV5/SG-169 (K15) (Velocity error correction adjustment)
STEP-2 • Turn off VTR. • Put SG-169 board back. • Put the connection back.		

15-48. SYNC PHASE PRESET ADJUSTMENT

Machine conditions for adjustment	Specifications	Adjustments
STEP-1 • Turn on VTR. • VTR: EE ↔ SYSTEM BYPASS • TEST SG: Color bars (Y, P_B, P_R) NOTE: MENU S12 (REF SELECT): INPUT • OSCILLOSCOPE: 0.1V/DIV 5µS/DIV • TRIG: MENU T03 (WFM TRIG SEL) "REF HD"	VIDEO OUTPUT Y/G OUTPUT connector 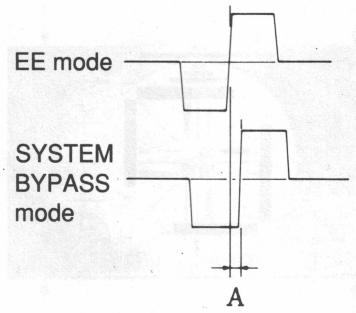 A = 0 ± 5nsec Confirm the SYNC phase of EE mode and SYSTEM BYPASS mode (push INPUT button of the control panel) is within specification (A).	Confirmation (EE mode SYNC phase preset check) If it does not satisfy specifications, perform STEP-2, and STEP-3.
STEP-2 • VTR : EE ↔ SYSTEM BYPASS • TEST SG: Color bars (Y, P_B, P_R) NOTE: MENU S12 (REF SELECT): INPUT • OSCILLOSCOPE: 0.1V/DIV 5µS/DIV • TRIG: MENU T03 (WFM TRIG SEL) "REF HD"	VIDEO OUTPUT Y/G OUTPUT connector 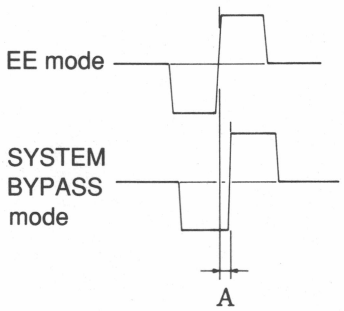 A = t_0 Compare SYNC phase at EE mode to the one at SYSTEM BYPASS mode, • t_0 ahead: delay sync phase by t_0. • t_0 behind: proceed sync phase by t_0.	

Machine conditions for adjustment	Specifications	Adjustments
STEP-3 • Record the phase difference (A) in STEP-1. (Make this phase difference as t0). • Turn off VTR. • Pull out SG-169 board with the extension board EX-211. • Turn on VTR.	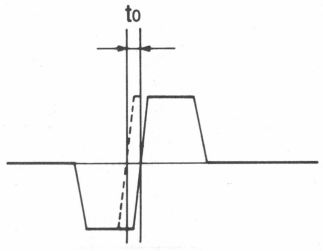 Confirm the SYNC phase of EE mode and SYSTEM BYPASS mode (INPUT button of the control panel is pressed) is within specification (A).	⊘RV6/SG-169(L3) (EE mode SYNC phase preset adjustment)
STEP-4 • Turn off VTR; and put back SG-169 board.		
STEP-5 • Confirm STEP-1.		

15-49. VIDEO PHASE ADJUSTMENT

① Serial No.10001-10499

Machine conditions for adjustment	Specifications	Adjustments
STEP-1 • VTR: EE • TEST SG: Built-in SG (Color bars) (MENU T20 (VIDEO TEST SG): CB) NOTE: MENU S12 (REF SELECT): INPUT • OSCILLOSCOPE: 0.2V/DIV, 5μS/DIV • TRIG: MENU T03 (WFM TRIG SEL) "REF HD"	VIDEO OUTPUT Y/G connector 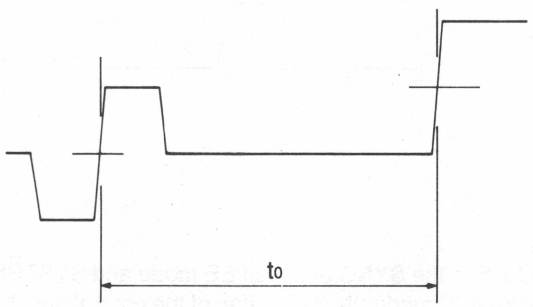 to = 3.23 ± 0.01 μsec	◐RV4/SG-169 (K1) (VIDEO phase adjustment) If it does not satisfy specifications, change JP2/SG-169 (L17) then readjust.
STEP-2 • MENU T20 (VIDEO TEST SG): OFF		

② Serial No.10501 and higher

Machine conditions for adjustment	Specifications	Adjustments
• VTR: EE • TEST SG: Built-in SG (Color bars) (MENU T20 (VIDEO TEST SG): CB) • Shorten A blanking backporch, and create the rising waveform. (⊘RV2/SG-169) • Perform Section 15-50, STEP-2, A blanking backporch adjustment.	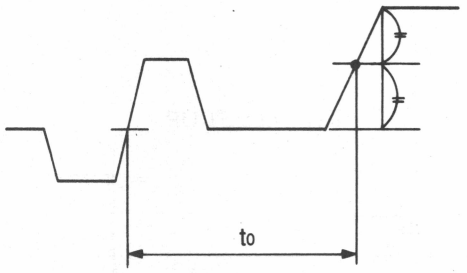 to = 2.586 ± 0.01 µsec	⊘RV4/SG-169 (K1)

15-50. ANALOG BLANKING ADJUSTMENT

Note: Use TSG1125/Sony Tectronix as HD signal generator for this adjustment.
Do not turn volume in case that there is no TSG1125.

Machine conditions for adjustment	Specifications	Adjustments
STEP-1 • VTR: EE • TEST SG: Color bars (Y, P_B, P_R) (Use TSG1125/Sony Tectronix) NOTE: MENU S12 (REF SELECT): INPUT • VIDEO control panel of the front panel OUTPUT SETUP MASTER → MAN OUTPUT SETUP Y/G → MAN • Turn OUTPUT level control volume fully clockwise. • OSCILLOSCOPE: 0.2V/DIV 5μS/DIV • TRIG: MENU T03 (WFM TRIG SEL) "REF HD"	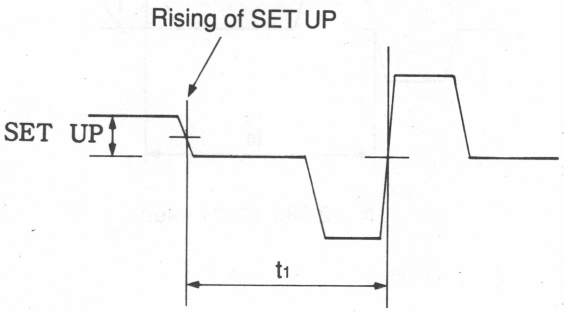 t_1 = 1.185 ± 0.02 μsec	◐RV1/SG-169 (J1) (A blanking frontporch adjustment)
STEP-2 • VIDEO control panel of the front panel OUTPUT SETUP MASTER → FIX OUTPUT SETUP G/Y → FIX	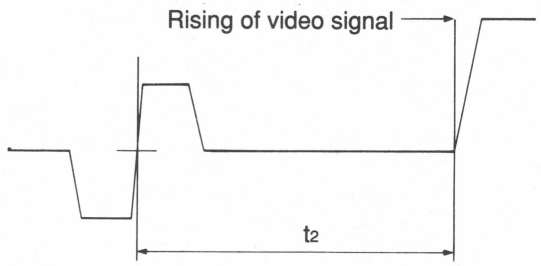 t_2 = 2.586 ± 0.02 μsec	◐RV2/SG-169 (J1) (A blanking backporch adjustment)

15-51. Y/C PHASE ADJUSTMENT

Machine conditions for adjustment	Specifications	Adjustments
• VTR: EE • TEST SG: Color bars (Y, P_B, P_R) NOTE : S12 (REF SELECT): INPUT • MENU T20 (VIDEO TEST SG): CB • OSCILLOSCOPE: CH1, 0.2V/DIV CH2, 0.2V/DIV 5μS/DIV • TRIG: MENU T03 "REF HD"	CH-1: VIDEO OUTPUT P_R/R OUTPUT connector (terminated in 75Ω) 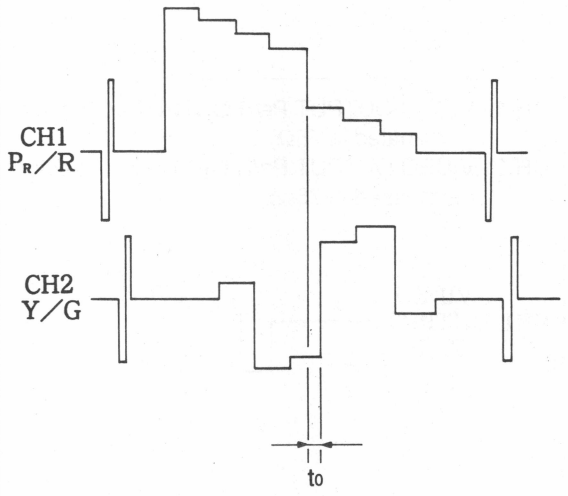 to = 0 ± 5nsec	◐RV10/SG-169 (E8) (Y/C phase adjustment) If it does not satisfy specifications, change JP1/SG-169 (G9) then adjust.

15-52. PB/PR PHASE ADJUSTMENT

Machine conditions for adjustment	Specifications	Adjustments
STEP-1 • Pull out TBC-15 board with the extension board EX-211. • Turn on VTR.		
STEP-2 • VTR: EE • TEST SG: Built-in SG (Color bars) NOTE: MENU S12 (REF SELECT): INPUT • MENU T20 (VIDEO TEST SG): CB • OSCILLOSCOPE: CH1, 0.2V/DIV CH2, 0.2V/DIV 20μS/DIV • TRIG: MENU T03 (WFM TRIG SEL) "REF HD"	CH-1: VIDEO OUTPUT PB/B OUTPUT connector (terminated in 75Ω) CH-2: VIDEO OUTPUT PR/R OUTPUT connector (terminated in 75Ω) 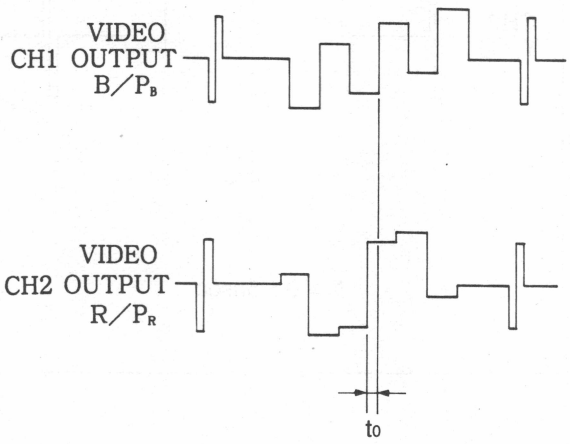 to = Minimum	(PB/PR phase adjustment) Short one of J1-J5. (JP3 is shorted when the unit is shipped.)
STEP-3 • Turn off VTR. • Put TBC-15 board back.		

15-53. Y PHASE ADJUSTMENT

<table>
<tr><th>Machine conditions for adjustment</th><th>Specifications</th><th>Adjustments</th></tr>
<tr><td colspan="3">STEP-1

1. Turn off VTR and, pull out IPR-1 board with the extension board EX-211.

2. Turn on VTR.</td></tr>
<tr><td>STEP-2

• VTR: EE

• TEST SG: Color bars
(Y, PB, PR)

• MENU S12 (REF SELECT): INPUT

• OSCILLOSCOPE:
0.2V/DIV
5μS/DIV

• TRIG: MENU T03 (WFM TRIG SEL) “REF HD”</td><td>VIDEO OUTPUT Y/G OUTPUT connector
(terminated in 75Ω)

 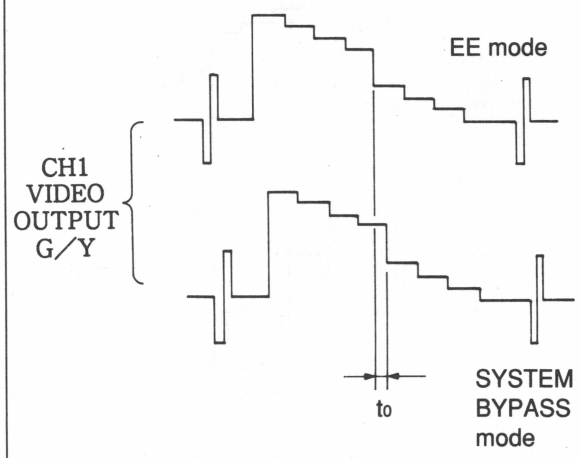

to = 0 ± 10nsec

Adjust VIDEO OUT Y phase of EE mode and SYSTEM BYPASS mode (push the INPUT button of the control panel) to meet the specifications.</td><td>●DL-1/IPR-1 (K25)
(Y phase adjustment)

After adjustment, put the cap on DL-1.</td></tr>
<tr><td>NOTE: After replacing built-in SG, perform the following adjustment.

• VTR: EE

• TEST SG: Color bars
(Y, PB, PR)

• MENU S12 (REF SELECT): INPUT

• MENU T02 (WFM SELECT): AD Y2 of IPR-1 board

• OSCILLOSCOPE:
0.1V/DIV
500μS/DIV

• TRIG: MENU T03 (WFM TRIG SEL) “REF HD”</td><td>TP607/IPR-1(C1)

 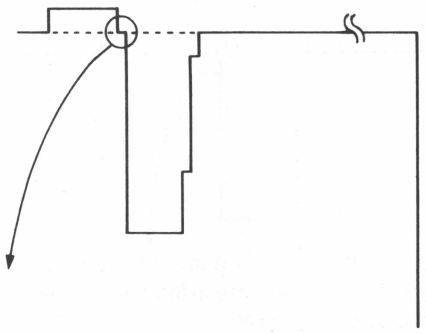

Make sure that sample point around the center of these three SYNC values come to the pedestal level (center of three values of SYNC).</td><td>●DL-1/IPR-1 (K25)
(Y phase adjustment)

After adjustment, put the cap on DL-1.</td></tr>
</table>

15-54. Y/C DELAY ADJUSTMENT

15-54-1. Y/C Delay Adjustment (1)

Machine conditions for adjustment	Specifications	Adjustments
• VTR: EE • TEST SG: Color bars (Y, P_B, P_R) • MENU S12 (REF SELECT): INPUT • OSCILLOSCOPE: CH-1, 0.2V/DIV CH-2, 0.2V/DIV 5µS/DIV • TRIG: MENU T03 (WFM TRIG SEL) "REF HD"	CH-1: VIDEO OUTPUT Y/G OUTPUT connector (Terminated in 75Ω) CH-2: VIDEO OUTPUT P_R/R OUTPUT connector (Terminated in 75Ω) 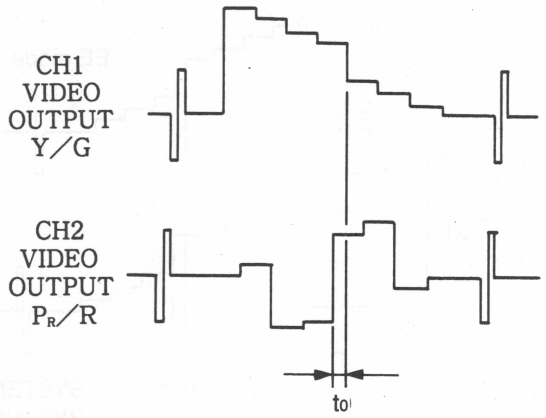 $t_0 = 0 \pm 5$nsec	◐RV602/IPR-1 (J21) (P_R, Y/C delay adjustment)
NOTE: After replacing built-in SG, perform the following adjustment. • VTR: EE • TEST SG: Color bars (Y, P_B, P_R) • MENU S12 (REF SELECT): INPUT • MENU T02 (WFM SELECT): AD P_R of IPR-1 board • OSCILLOSCOPE: CH-1, 0.2V/DIV 500µS/DIV • TRIG: MENU T03 (WFM TRIG SEL) "REF HD"	TP607/IPR-1(C1) 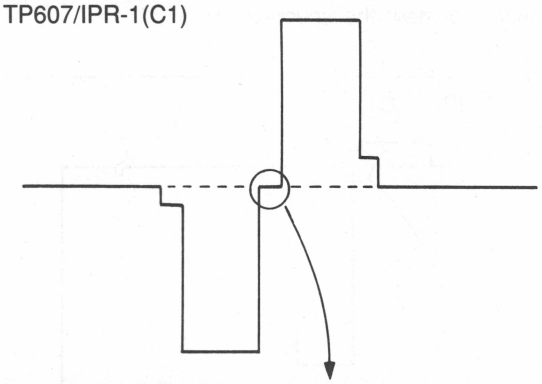 Make sure that sample point around center of these three SYNC values come to the pedestal level (center of three values of SYNC).	◐RV602/IPR-1 (J21) (P_R sample phase adjustment)

15-54-2. Y/C Delay Adjustment (2)

Machine conditions for adjustment	Specifications	Adjustments
• VTR: EE • TEST SG: Color bars (Y, P_B, P_R) • MENU S12 (REF SELECT): INPUT • OSCILLOSCOPE: CH-1, 0.2V/DIV CH-2, 0.2V/DIV 5μS/DIV • TRIG: MENU T03 (WFM TRIG SEL) "REF HD"	CH-1: VIDEO OUTPUT Y/G OUTPUT connector (terminated in 75Ω) CH-2: VIDEO OUTPUT P_B/B OUTPUT connector (terminated in 75Ω) 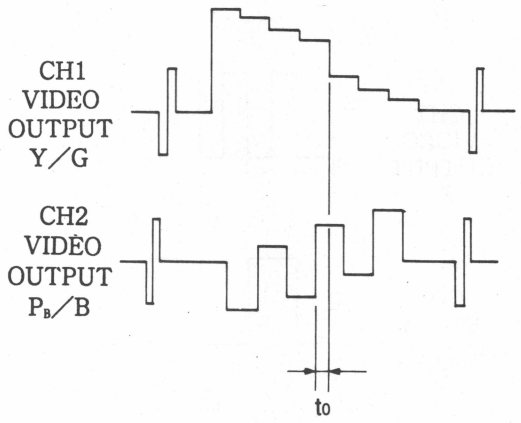 $t_0 = 0 \pm 5$nsec	⊘RV601/IPR-1 (J21) (P_B, Y/C delay adjustment)
NOTE: After replacing built-in SG, perform the following adjustment. • VTR: EE • TEST SG: Color bars (Y, P_B, P_R) • MENU S12 (REF SELECT): INPUT • MENU T02 (WFM SELECT): AD P_B of IPR-1 board • OSCILLOSCOPE: CH-1, 0.2V/DIV 500μS/DIV • TRIG: MENU T03 (WFM TRIG SEL) "REF HD"	TP607/IPR-1(C1) 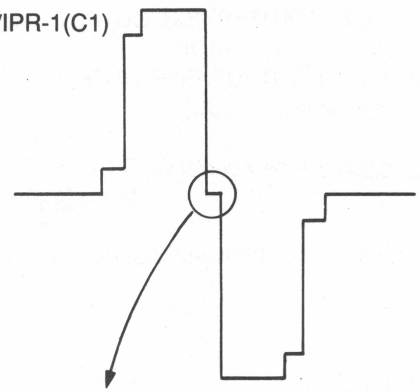 Make sure that sample point around center of these three SYNC values come to the pedestal level (center of three values of SYNC).	⊘RV601/IPR-1 (J21) (P_B sample phase adjustment)

15-54-3. Y/C Delay Adjustment (3)

<table>
<tr><th>Machine conditions for adjustment</th><th>Specifications</th><th>Adjustments</th></tr>
<tr><td>STEP-1

• VTR: EE

• TEST SG: Color bars (GBR)

• MENU S12 (REF SELECT): INPUT

• INPUT MATLIX SW (REAR PANEL): GBR

• OSCILLOSCOPE:
CH1, 0.2V/DIV
CH2, 0.2V/DIV
5μS/DIV

• TRIG: MENU T03 (WFM TRIG SEL) “REF HD”</td><td>CH-1: VIDEO OUTPUT Y/G OUTPUT connector (terminated in 75Ω)
CH-2: VIDEO OUTPUT PB/B OUTPUT connector (terminated in 75Ω)

 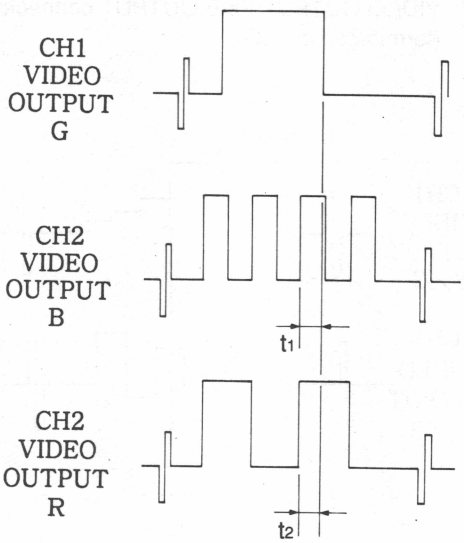

Phase difference between VIDEO OUTPUT G and B:
$t_1 = 0\ ^{+0}_{-10}$nsec</td><td>Confirmation
(Video output G/B phase difference)</td></tr>
<tr><td>STEP-2</td><td>CH-1: VIDEO OUTPUT Y/G OUTPUT connector (terminated in 75Ω)
CH-2: VIDEO OUTPUT PR/R OUTPUT connector (terminated in 75Ω)

Phase difference between VIDEO OUTPUT G and B:
$t_2 = 0\ ^{+0}_{-10}$nsec

Phase difference between B and R: t1-t2 ≦5nsec</td><td>Confirmation
(Video output G/R phase difference)
(Video output B/R phase difference)</td></tr>
<tr><td colspan="3">STEP-3

• Signal Generator: Back to color bars (Y, PB, PR)

• INPUT MATLIX SW: Y, PB, PR

• Turn off VTR.

• Put IPR-1 board back.</td></tr>
</table>

SECTION 16
AUDIO SIGNAL SYSTEM ALIGNMENT

16-1. ADJUSTMENT SEQUENCE

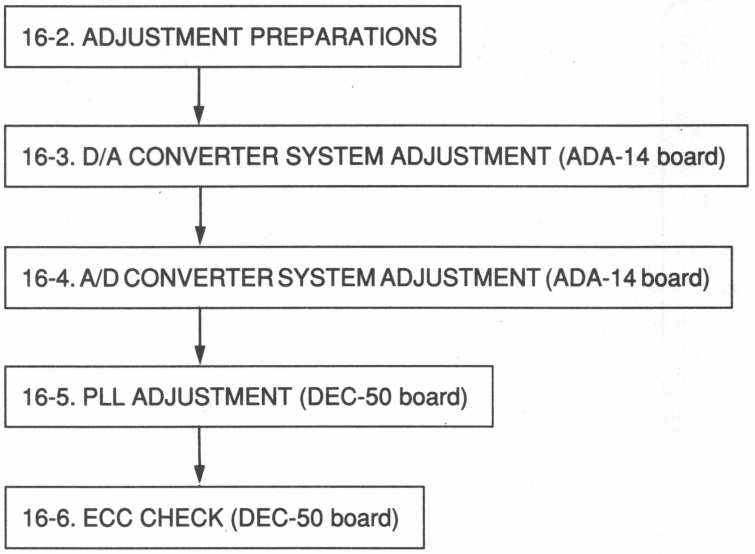

16-2. ADJUSTMENT PREPARATIONS

16-2-1. Connection

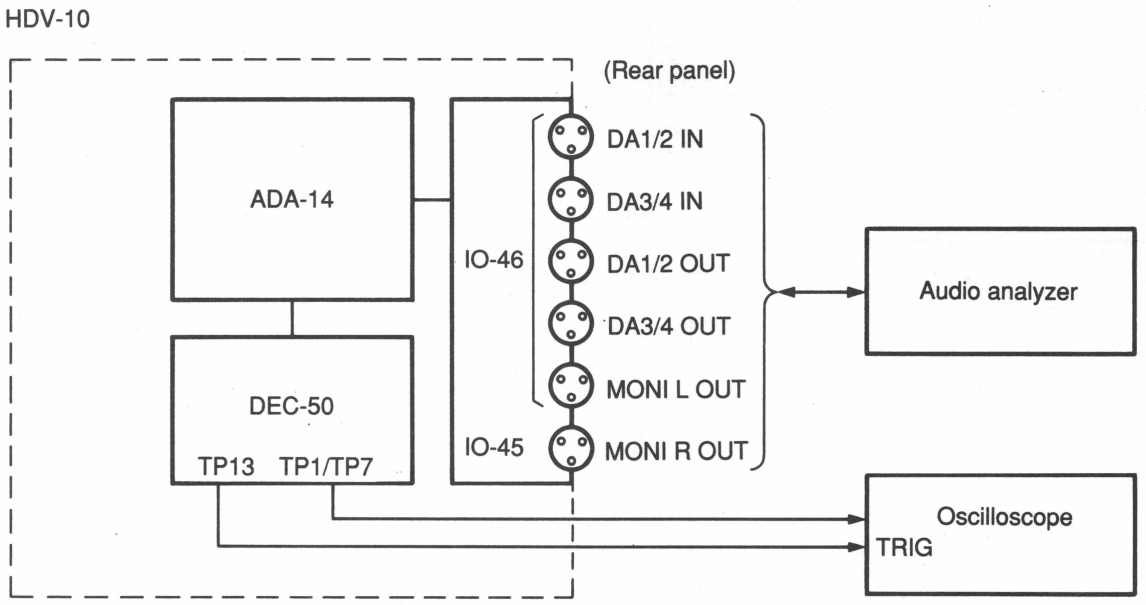

16-2-2. Locations of Adjustments and Test Points

- ADA-14 board

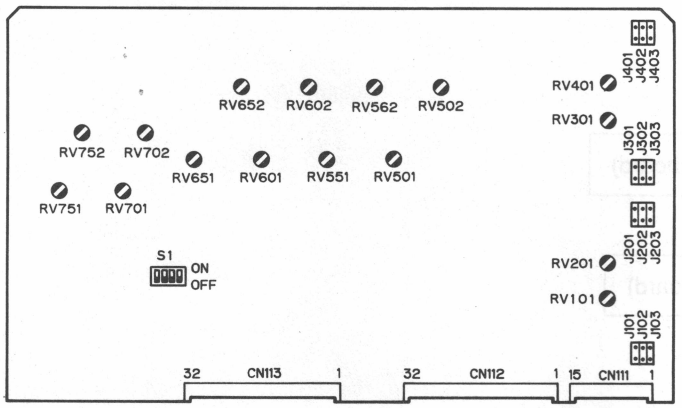

ADA-14 Board
-A Side-

- DEC-50 board

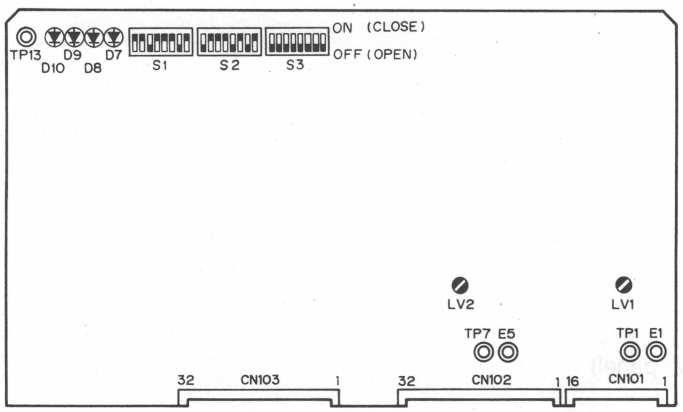

DEC-50 Board
-A Side-

- ENC-12 board

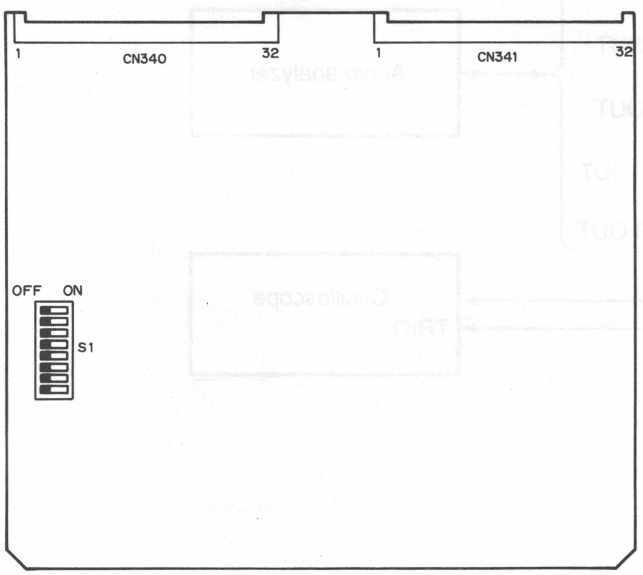

ENC-12 Board
-A Side-

16-2-3. Before Starting Adjustment

(1) ADA-14 board
- Extend ADA-14 board by EX-211 extension board.
- Set all the DIP switches on S1 on the board to the OFF position. Turn on the power switch.

(2) DEC-50 board
- Extend DEC-50 board by EX-211 extension board.
- Set all the DIP switches on S1 and S2 on the board to the ON position and those on the S3 to the OFF position. Turn on the power switch.

(3) ENC-12 board
- This board has no adjustment points.
- Check that all the DIP switches on S1 on the board are in the OFF position.

16-2-4. ADA-14 Board Input Impedance Setting

The input impedance, DA-1 through DA-4 can be set to 600 Ω, 150 Ω or 10 kΩ by changing the jumper setting as follows. (They are factory set to 600 Ω.)

	DA1	DA2	DA3	DA4
600 Ω	JP101	JP201	JP301	JP401
150 Ω	JP102	JP202	JP302	JP402
10 kΩ	JP103	JP203	JP303	JP403

16-3. D/A CONVERTER SYSTEM ADJUSTMENT (ADA-14 board)

<table>
<tr><th>Machine condition for adjustment</th><th>Specifications</th><th>Adjustments</th></tr>
<tr><td>STEP-1
• TEST SG: ON (1 kHz)
• TEST SIG turns on when you key in 'SET UP, C, -, SET, 22, SET, +, +, SET' in this order.</td><td>DA1 OUTPUT TERMINAL

+4.0 ± 0.1 dBm (terminated at 600 Ω)</td><td>⊘ RV502/ADA-14 (K3)
(D/A output level)</td></tr>
<tr><td>STEP-2

• TEST SG: ON (1 kHz)</td><td>DA1 OUTPUT TERMINAL
• Minimize the distortion factor (≦ 0.02%)</td><td>⊘ RV501/ADA-14 (J4)
(D/A distortion factor)</td></tr>
<tr><td>STEP-3

• TEST SG: ON (400 Hz)</td><td>[Check]
DA1 OUTPUT TERMINAL

0 ± 0.1dB (Reference: 1 kHz)</td><td>(D/A 400 Hz frequency response)</td></tr>
<tr><td>STEP-4

• TEST SG: ON (3 kHz)</td><td>[Check]
DA1 OUTPUT TERMINAL

0 ± 0.1 dB (Reference: 1 kHz)</td><td>(D/A 3 kHz frequency response)</td></tr>
<tr><td>STEP-5

• Repeat steps 1 to 4 to adjust the DA1 to DA4, MONI-L and MONI-R, referring to the right table for adjustment points.</td><td colspan="2"><table>
<tr><th></th><th>DA1</th><th>DA2</th><th>DA3</th><th>DA4</th><th>MONI-L</th><th>MONI-R</th></tr>
<tr><td>Level</td><td>RV502 (K3)</td><td>RV552 (J3)</td><td>RV602 (H3)</td><td>RV652 (F3)</td><td>RV702 (C3)</td><td>RV752 (B4)</td></tr>
<tr><td>Distortion factor</td><td>RV501 (J4)</td><td>RV551 (H4)</td><td>RV601 (F4)</td><td>RV651 (D4)</td><td>RV701 (C5)</td><td>RV751 (A5)</td></tr>
</table></td></tr>
</table>

16-4. A/D CONVERTER SYSTEM ADJUSTMENT (ADA-14 board)

<table>
<tr><th>Machine conditions for adjustment</th><th>Specifications</th><th>Adjustments</th></tr>
<tr><td>STEP-1

• TEST SG: OFF
• REC VOLUME: PRESET
• INPUT 1 kHz 4 dBm</td><td>DA1 OUTPUT TERMINAL

+4.0 ± 0.1 dBm (terminated at 600 Ω)

[Check]
Distortion factor ≦ 0.03%</td><td>⊘ RV101/ADA-14 (P9)
(A/D output level)</td></tr>
<tr><td>STEP-2

• REC VOLUME: PRESET
• INPUT: 400 Hz 4 dBm</td><td>[Check]
DA1 OUTPUT TERMINAL

0 ± 0.1 dB (Reference: 1 kHz)</td><td>(A/D 400 Hz frequency response)</td></tr>
<tr><td>STEP-3

• REC VOLUME: PRESET
• INPUT: 3 kHz 4 dBm</td><td>[Check]
DA1 OUTPUT TERMINAL

0 ± 0.1 dB (Reference: 1 kHz)</td><td>(A/D 3 kHz frequency response)</td></tr>
<tr><td>STEP-4

• EMPHASIS switch: ON (on the front panel).
• Repeat steps 1 to 3.</td><td>[Check]
DA1 OUTPUT TERMINAL

0 ± 0.1 dB (Reference: 1 kHz)</td><td>(EMPHASIS ON frequency response)</td></tr>
<tr><td>STEP-5

• Audio analyzer output: OFF
• EMPHASIS switch OFF</td><td>[Check]
DA1 OUTPUT TERMINAL

Noise level ≦ –66.0 dB
(Dynamic range ≧ 88 dB)</td><td>(Noise level)</td></tr>
<tr><td>STEP-6

• REC VOLUME: VARIABLE</td><td>[Check]
DA1 OUTPUT TERMINAL

• The signal level should change continuously.
• The noise level should be low enough.</td><td></td></tr>
<tr><td>STEP-7

• Repeat steps 1 to 6 to adjust the DA2 to DA4, referring to the right table for adjustment points.</td><td colspan="2"><table><tr><th></th><th>DA1</th><th>DA2</th><th>DA3</th><th>DA4</th></tr><tr><td>Level</td><td>RV101 (P9)</td><td>RV201 (R8)</td><td>RV301 (P3)</td><td>RV401 (P2)</td></tr></table></td></tr>
</table>

16-5. PLL ADJUSTMENT (DEC-50 board)

Wait for 10 minutes or more to allow the unit to warm up after the power in turned on and make adjustment.

Machine conditions for adjustment	Specifications	Adjustments
STEP-1 VTR: EE Oscilloscope: 500 mV/DIV 1 mS/DIV TRIG mode TP11 (DRUM REF)/SG-169 (G1)	TP1/DEC-50 (M18) GND: E1/DEC-50 (M18) 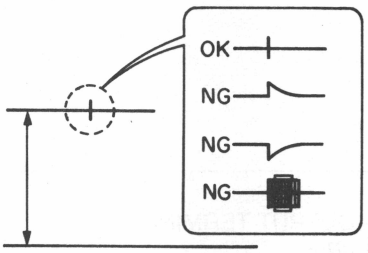 A = 2.1 ± 0.5 V	⊘ LV1/DEC-50 (M15) (DA1 VCO frequency) • Adjust the waveform is flat within the specification.
STEP-1 VTR: EE Oscilloscope: 500 mV/DIV 1 mS/DIV TRIG mode TP11 (DRUM REF)/SG-169 (G1)	TP7/DEC-50 (J18) GND: E5/DEC-50 (J18) 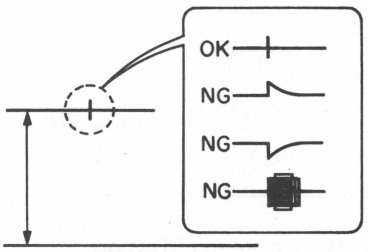 A = 2.1 ± 0.5 V	⊘ LV2/DEC-50 (J115) (DA2 VCO frequency) • Adjust the waveform is flat within the specification.

16-6. ECC CHECK (DEC-50 board)

Machine conditions for adjustment	Specifications	Adjustments
STEP-1 VTR: EE	[Check] D8, D10 (B1): The green LED is on. D7, D9 (B1): The red LED is off.	(Error correction check)
STEP-2 • TEST SG: ON (1 kHz) (TEST SIG turns on when you key in 'SET UP, C, –, SET, 22, SET, +, +, SET' in this order. • ENC/DEC EE (T05): ON	[Check] DA1~DA4 OUTPUT TERMINAL +4.0 ± 0.1 dBm • No noise and irregular sounds should be heard.	(ENC through DEC EE check)
STEP-3 VTR: PLAY (Standard tape) • DIP SW S1-2, 6 (C1) : ON S2-2, 4, 8 (D1) : ON	[Check] D8, D10 (B1): The green LED is on. D7, D9 (B1): The red LED is off.	(Error correction check)

HDV-10 (UC, EK, 英)
3-167-410-05 Volume-1

Sony Corporation
Broadcast Products Company

Printed in Japan
1994. 4 08
© 1991
Published by Broadcast Products Company